INSTRUCTIONS

GEI-10190L

DC AUXILIARY RELAYS

TYPE HGA17A TO F, H, M, R, S, T

GENERAL ELECTRIC

CONTENTS

DC AUXILIARY RELAYS

TYPE HGA17A TO F, H, M, R, S, T

DESCRIPTION

The Type HGA relays included in these instructions are double-pole, hinge-type relays suitable for application wherever a low-energy device with time-delay dropout is required. Table I lists the differences between the relays covered by these instructions.

CHARACTERISTICS

TABLE I

RELAY	Type of Connection	Contact Arrangement		Time Delay Cycles		*
		N. O.	N. C.	P. U. (Max.)	D. O. (Min.)	*
HGA17A	Back	2	1	**	15	
HGA17B	Front	2	1	**	15	
HGA17C	Front	2	1	**	15	
HGA17D	Front	2	2	3.5	**	
HGA17E	Front	0	2	3	15	
HGA17F	Back	0	2	3	15	
HGA17H	Back	2	2	3.5	**	
HGA17M	Front	2	1	**	15	
HGA17R	Front	2	2	3.5	**	
HGA17S	Front	2	1	**	15	
HGA17T	Front	2	2	3.5	**	

+ At rated voltage and on a 60 cycle basis
** No factory calibration made

* All of these relays have a cover with the exception of the HGA17B, HGA17M and HGA17R relays.

RATINGS

The relays are available for continuous operation at DC voltage ratings up to 250 volts, and DC current ratings up to 10 amperes. They can also be supplied with a rectifier for use in AC circuits. See Table III for list of coil ratings.

The current-closing rating of the contacts is 30 amperes. The current-carrying rating is 12 amperes continuously or 30 amperes for one minute. The interrupting ratings (non-inductive circuits) for various voltages are listed in Table II.

* Indicates revision

TABLE II

VOLTS	Interrupt (single break) (Amps)	
	HGA17A, HGA17B HGA17C, HGA17M HGA17S	HGA17D, HGA17E HGA17F, HGA17H HGA17R, HGA17T
115 AC	20	30
230 AC	10	20
24 DC	3	20
48 DC	1.5	10
125 DC	0.6	3
250 DC	0.25	0.75

BURDENS

The burdens of the coils for the Type HGA relays are listed in Table III.

TABLE III

Coil Ratings Amps or Volts	Coil Resistance (Ohms)	Cold Watts	* Volt Amperes
250 VDC	10300	6.1	-
220 VDC	10300	4.8	-
150 VDC	3595	6.3	-
125 VDC	2280	6.9	-
110 VDC	1700	7.1	-
95 VDC	1470	6.2	-
72 VDC	880	5.9	-
62.5 VDC	585	6.2	-
48 VDC	375	6.2	-
32 VDC	153	6.2	-
24 VDC	98	5.8	-
12 VDC	24.5	5.9	-
10 ADC	0.055	5.5	-
5 ADC	0.21	5.3	-
4 ADC	0.35	5.6	-
3 ADC	0.62	5.6	-
2.5 ADC	0.84	5.3	-
2 ADC	1.4	5.6	-
1 ADC	5.6	5.6	-
0.5 ADC	24.5	6.2	-
460 VAC	-	-	43
230 VAC	-	-	22
208 VAC	-	-	20
115 VAC	-	-	11
70 VAC	-	-	16.5

*Includes burden of rectifier and resistor when used.

CONSTRUCTION

The relays covered by these instructions are of the same basic construction. The contact circuits are closed or opened by moving contact arms, controlled by a hinge-type armature, which in turn is actuated by an operating coil and restrained by an adjustable control spring. The length of control gap is adjustable by means of screw contacts and locknuts in the front fixed-contact positions. The armature gap and back-contact wipe can be controlled by the screws and locknuts located in the moving-contact arms. This latter feature makes it possible to reduce the pickup energy to a relatively low value. Because of this, it is necessary to back off the front left stationary-contact screw to ensure sufficient contact pressure on the remaining normally-closed contact. The coil is wound on a copper spool which also acts as a damping ring and provides a time delay on pickup and dropout.

INSTALLATION

LOCATION AND MOUNTING

The relay should be installed in a location that is clean, dry, and free from excessive vibration. It should be mounted on a vertical surface by means of the steel mounting strap on the back of the molded compound base. Care should be taken to allow sufficient clearance in front of the relay to remove the cover, if one is included.

The outline and panel drilling diagrams are shown in Figures 4 to 10. The outlines of the external resistor and external rectifiers used with AC relays are shown in Figures 11 and 12.

CONNECTIONS

The internal connection diagrams are shown in Figures 2 and 3. The external connection diagram showing the use of a rectifier with AC relays is shown in Figure 1.

MAINTENANCE

PERIODIC TESTING

Auxiliary relay equipment should be checked for operation at regular intervals, preferably at the same time that the associated protective devices are inspected. The relays should be checked for pickup and drop-out values and time settings. These settings should not require readjustment, but if changes are necessary the points discussed under ADJUSTMENTS AND INSPECTION should be observed.

CONTACT CLEANING

For cleaning fine silver contacts, a flexible burnishing tool should be used. This consists of a flexible strip of metal with an etched roughtened surface, resembling in effect a superfine file. The polishing action is so delicate that no scratches are left, yet corroded material will be removed rapidly and thoroughly. The flexibility of the tool ensures the cleaning of the actual points of contact.

Fine silver contacts should not be cleaned with knives, files or abrasive paper or cloth. Knives or files may leave scratches which increase arcing and deterioration of the contacts. Abrasive paper or cloth may leave minute particles of insulating abrasive material in the contacts and thus prevent closing.

The burnishing tool described is included in the standard relay tool kit obtainable from the factory.

ADJUSTMENTS AND INSPECTION

***Relay types HGA17A, HGA17B, HGA17C, HGA17M, and HGA17S have been adjusted at the factory to pick up at 20 to 30 percent of rating for DC voltage relays and 30 to 40 percent of rating for AC voltage relays and DC current relays. Relay types HGA17D, HGA17E, HGA17F, HGA17H, HGA17R and HGA17T have been adjusted to pick up at approximately 60 per cent of rating for DC relays and 80 percent of rating for AC relays. These values may be affected by the adjustment of time delay but will be approximately equal to the values given above.**

The relays adjusted for the 60 or 80 per cent pickup are set so as to produce contact pressure and wipe on two normally-closed contacts. As shipped from the factory, all relays having low (30 per cent) pickup are provided with one normally-closed contact circuit. The left-hand (front-view) screw contact is backed out of engagement with its moving contact. This is necessary since the low control-spring tension used on these relays is not great enough to give sufficient pressure on two normally-closed contacts. The low control-spring tension is necessary to facilitate the adjustment of time delay on dropout, as described in the following paragraphs.

As shipped from the factory, all relays have been adjusted for the approximate time delay as listed in Table I. This time-delay feature results from the damping effect of the copper spool. It may be adjusted over a small range by regulating the tension in the control spring. This of course affects the pickup adjustment.

The minimum recommended contact wipe is one turn of the screw in the moving contact arm. To set the wipe, close the armature by hand and adjust the screws so that they are just touching the contact carrier. Then back off each screw one full turn, and lock in place with the locknut. The minimum recommended contact gap is 3-1/2 turns of the fixed contact screw. To adjust, turn both screws in until the normally-open contacts just make. Then back off each screw 3-1/2 turns and lock in position with the locknut. Lower contact gaps are permissible in special applications but the interrupting capacities listed in TABLE II will not apply. These ratings are for the minimum recommended gap settings previously mentioned.

The pickup value is adjusted by means of the control spring located at the lower end of the armature. The control spring should be in the front hole of the spring post for relays adjusted for 30-40 per cent pickup and in the rear hole for relays adjusted for 60-80 per cent pickup.

RENEWAL PARTS

It is recommended that sufficient quantities of renewal parts be carried in stock to enable the prompt replacement of any that are worn, broken, or damaged.

When ordering renewal parts, address the nearest Sales Office of the General Electric Company, specifying the quantity required and describing the parts by catalog numbers as shown in Renewal Parts Bulletin No. GEF-2623.

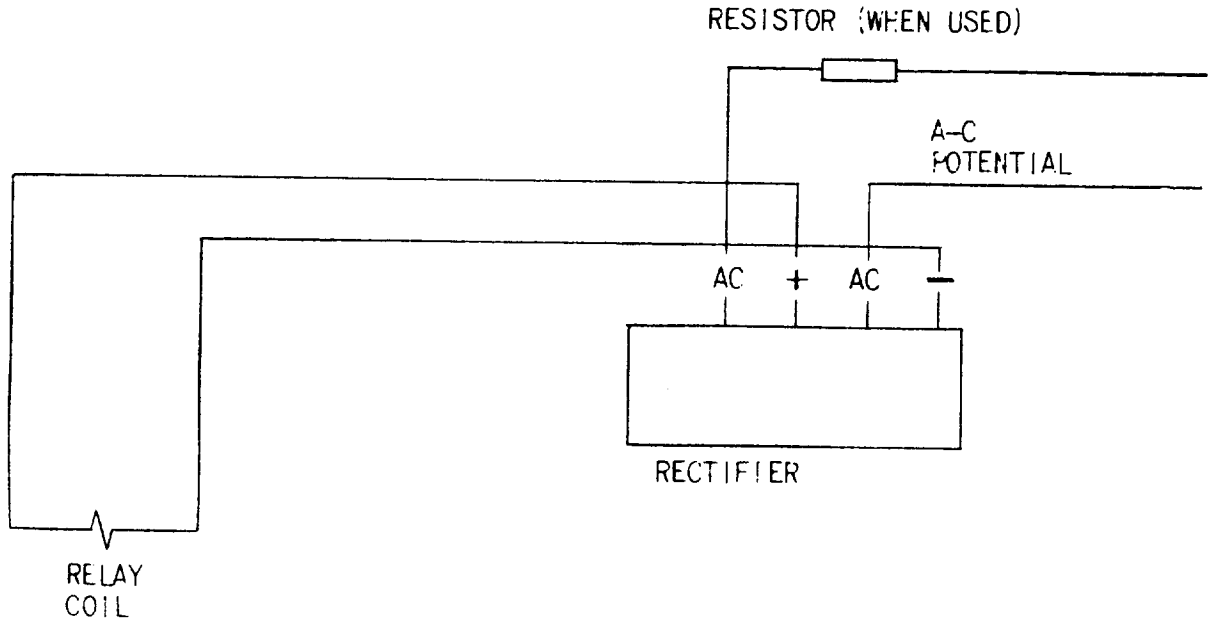

Fig. 1 (0418A0820-1) External Wiring Diagram for AC Operated HGA17 Relays

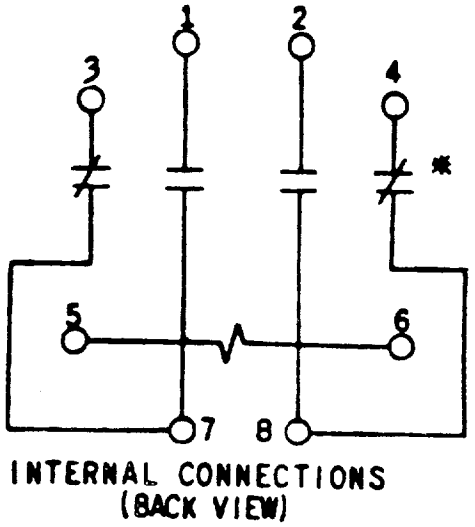

Fig. 2 (06077058-019) Internal Connection Diagram for HGA17A, HGA17B, HGA17C, HGA17D, HGA17H, HGA17M, HGA17R, HGA17S, and HGA17T Relays (Back View)

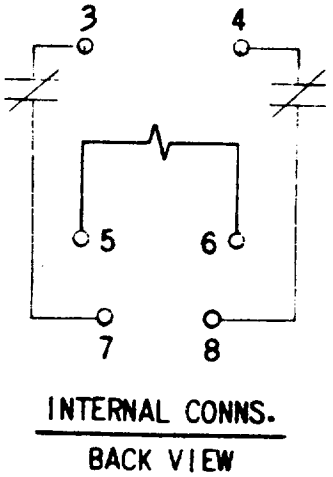

Fig. 3 (0104A8559-001) Internal Connection Diagram for HGA17E and HGA17F Relays (Back View)

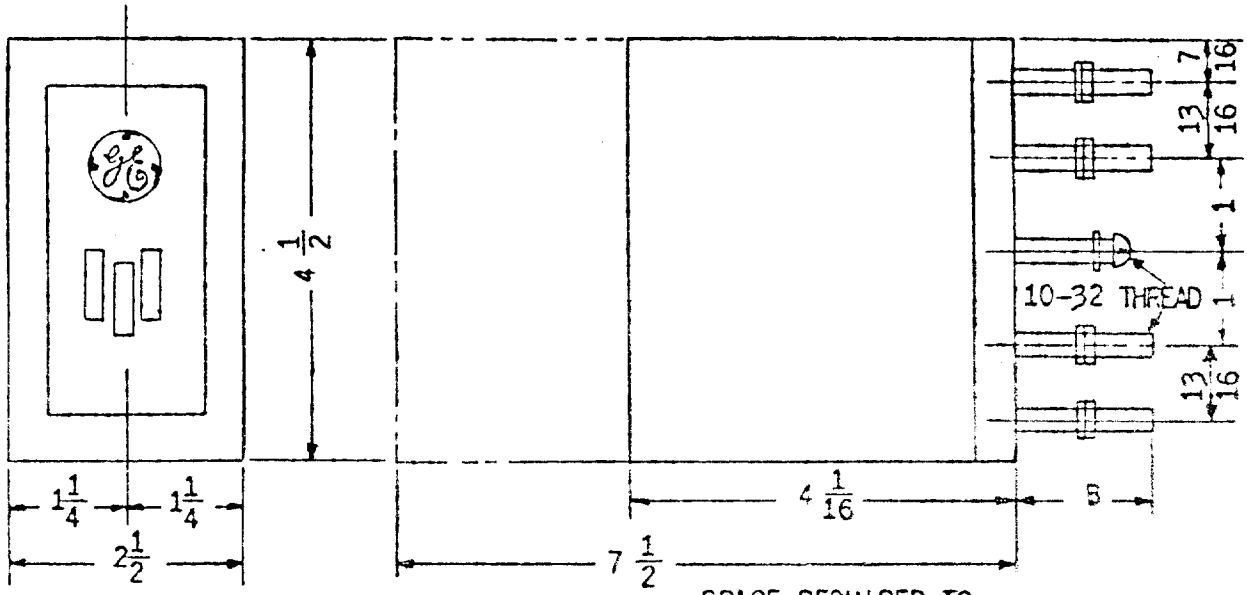

OUTLINE

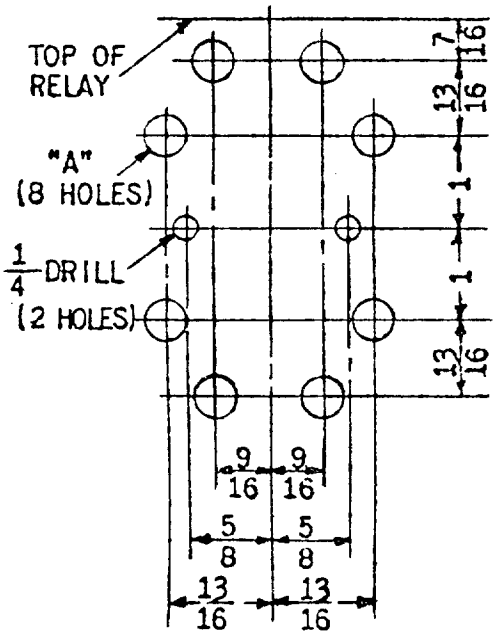

TYPE OF PANEL	"A"	"B"
INSULATING	7/16"	2-13/16"
STEEL	9/16"	1-3/8"

PANEL DRILLING (FRONT VIEW)

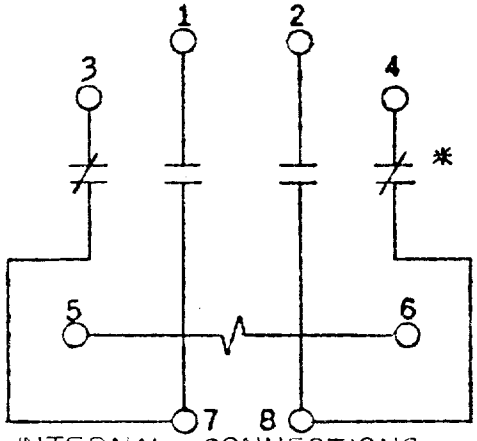

INTERNAL CONNECTIONS (BACK VIEW)

* = WITH HGA14A,14J,14K,14N,17A CONTACT 4 IS NOT USED UNLESS PICKUP IS RAISED TO 60% (DC) OR 80% (AC) OF RATING HGC11A DOES NOT USED CONTACT 4.

Fig. 4 (6077058 [20]) Outline and Panel Drilling for Surface Mounting of HGA17A and HGA17H Relays

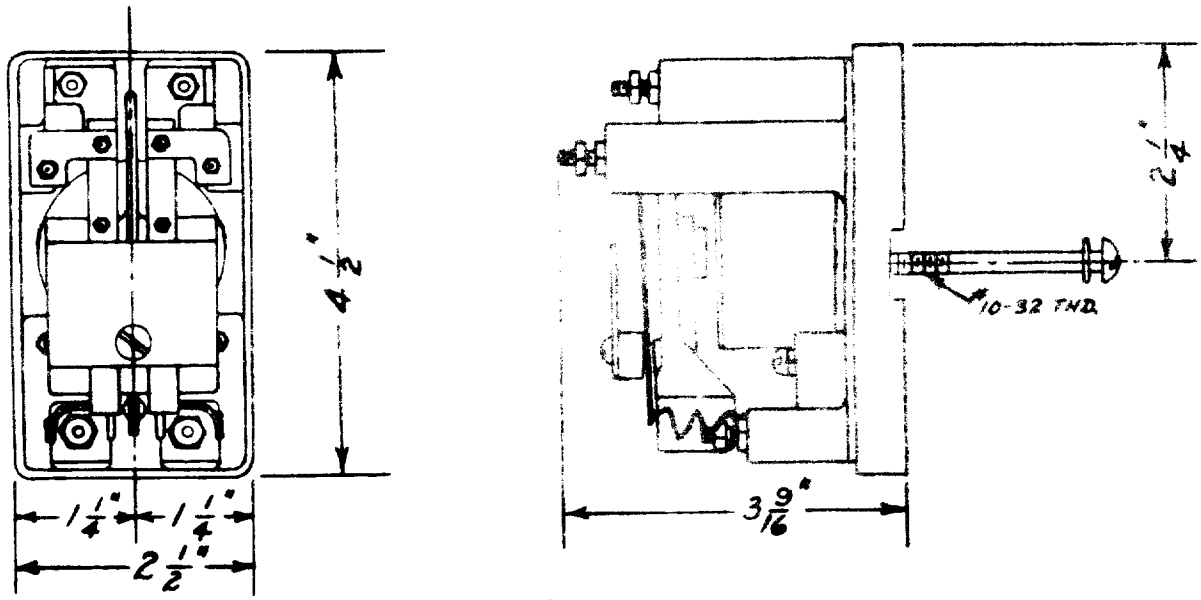

OUTLINE

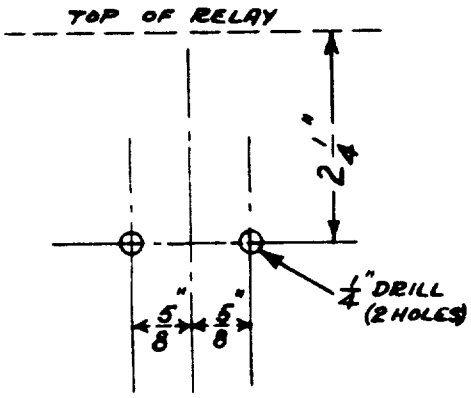

PANEL DRILLING

FRONT VIEW

Fig. 5 (06154350-003) Outline and Panel Drilling for Surface Mounting of HGA17B Relay

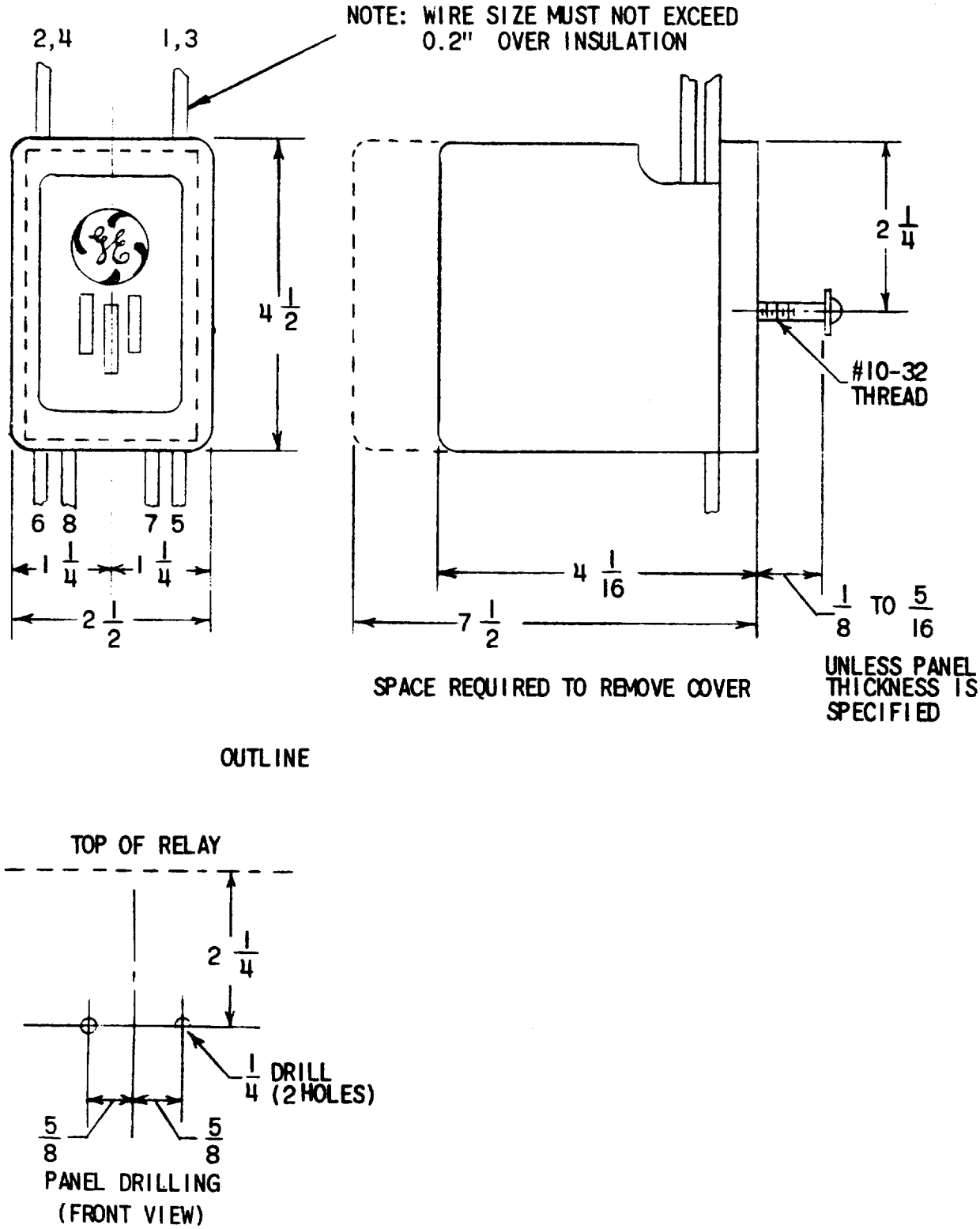

Fig. 6 (06375628-005) Outline and Panel Drilling for Surface Mounting of HGA17C, HGA17D and HGA17E Relays

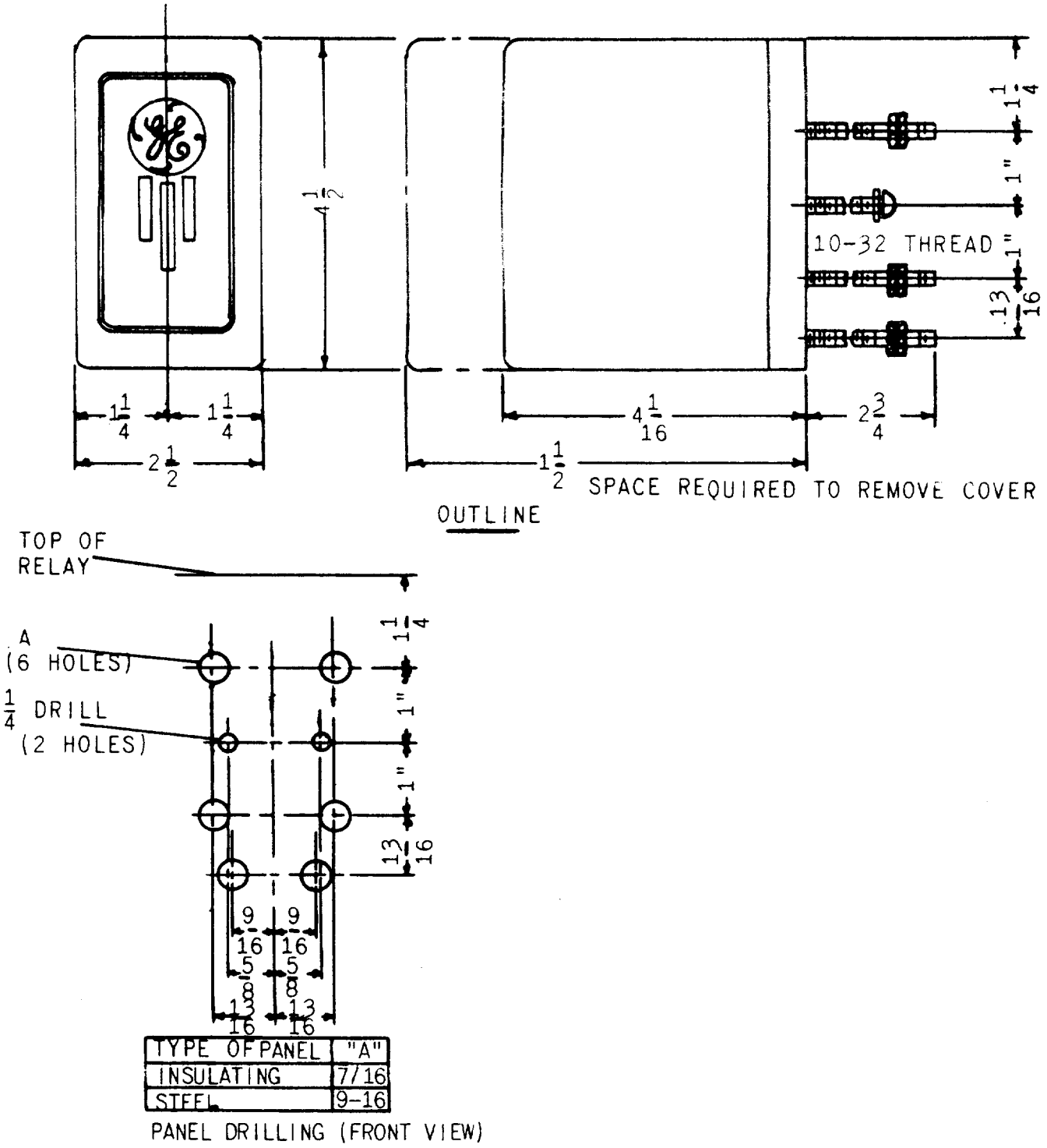

Fig. 7 (06400409-002) Outline and Panel Drilling for Surface Mounting of HGA17F Relay

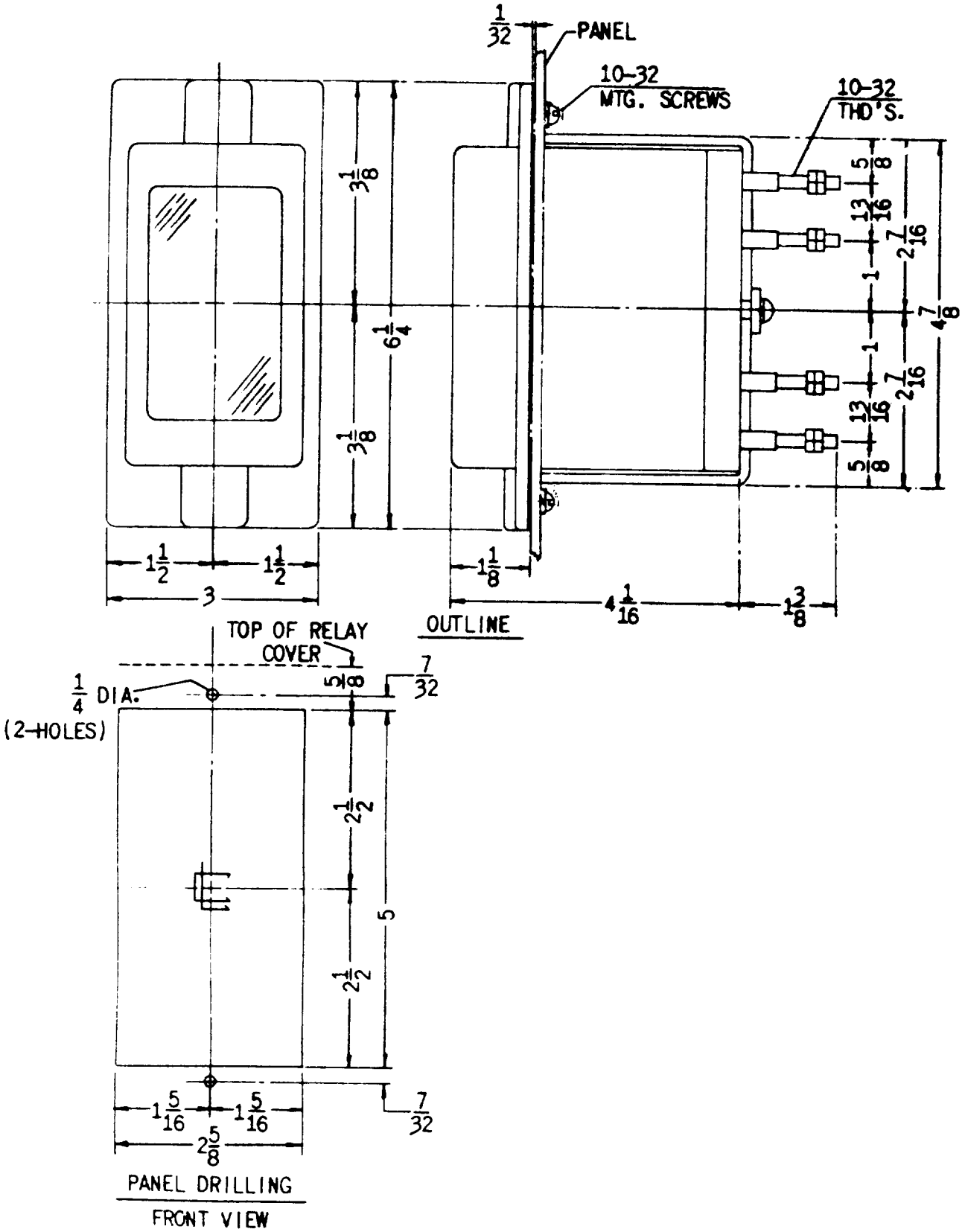

Fig. 8 (0104A8559-001) Outline and Panel Drilling for Semi-Flush Mounting of HFA17A, HGA17F and HGA17H Relays

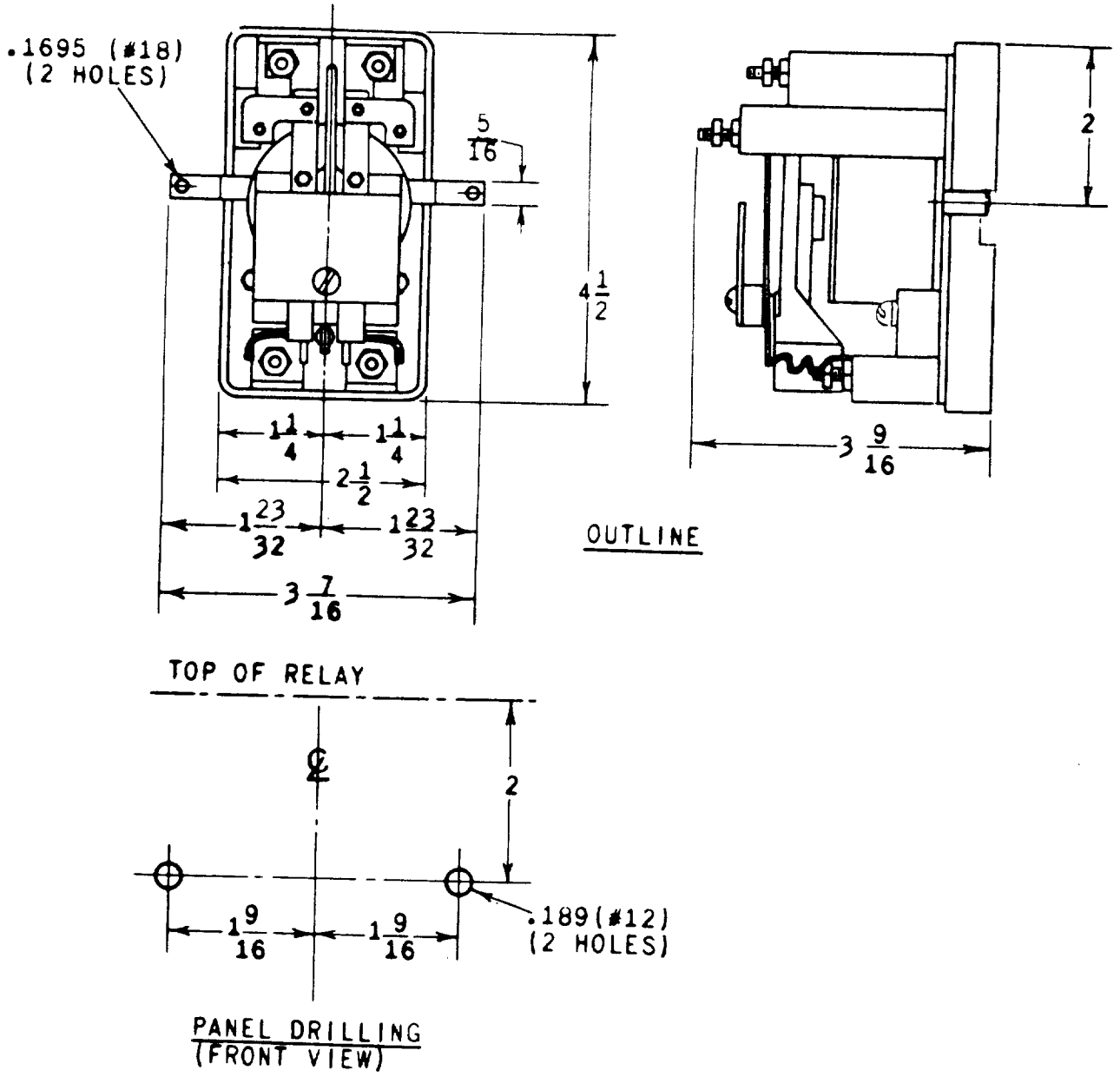

Fig. 9 (0148A3971-000) Outline and Panel Drilling for Front Mounting of HGA17M and HGA17R Relays

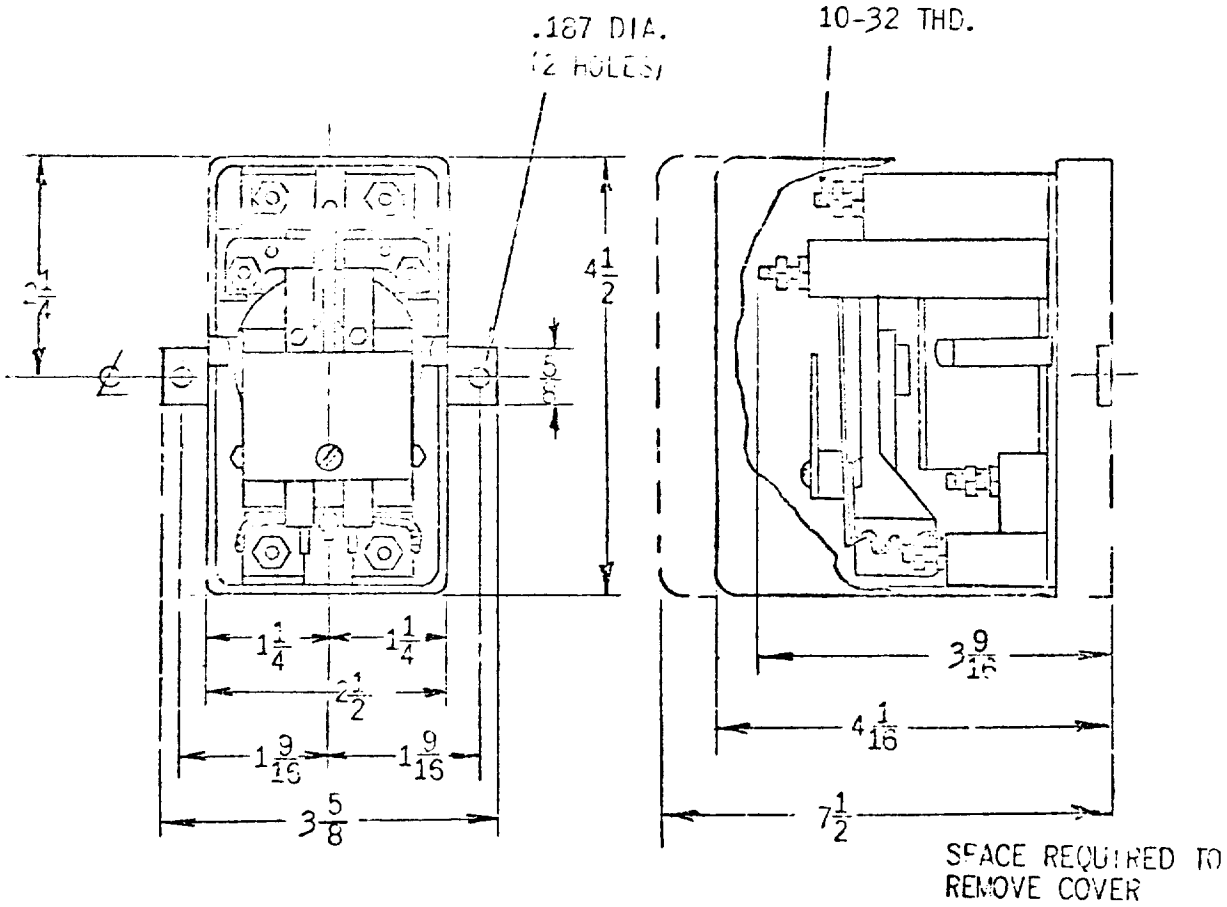

Fig. 10 (0165A7757-002) Outline and Panel Drilling for Front Mounting of HGA17S and HGA17T Relays

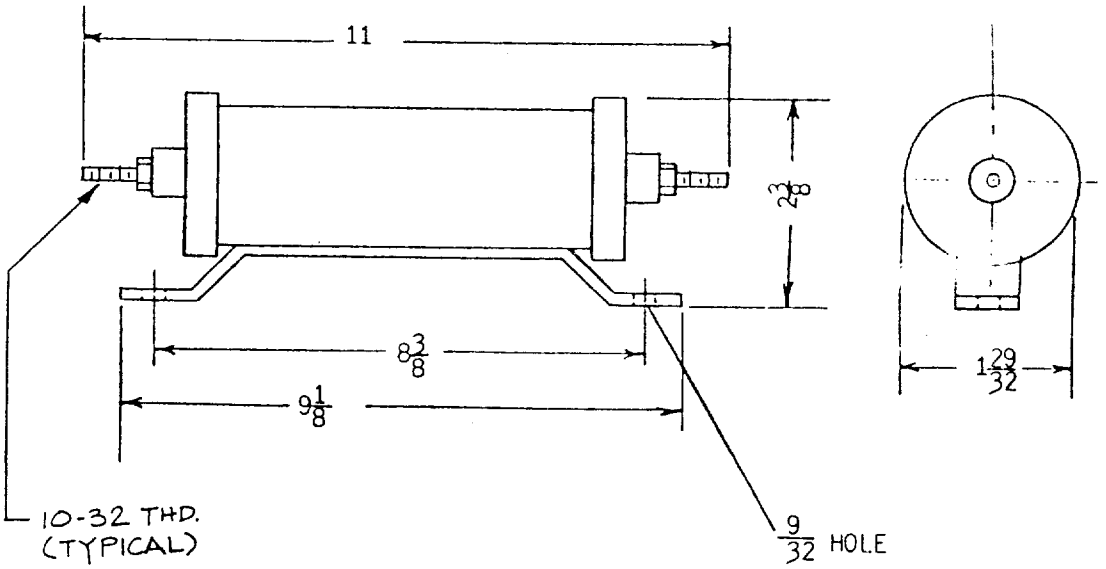

Fig. 11 (0389A0752 [2]) Outline of External Resistor Used with AC Voltage Rated HGA17 Relays

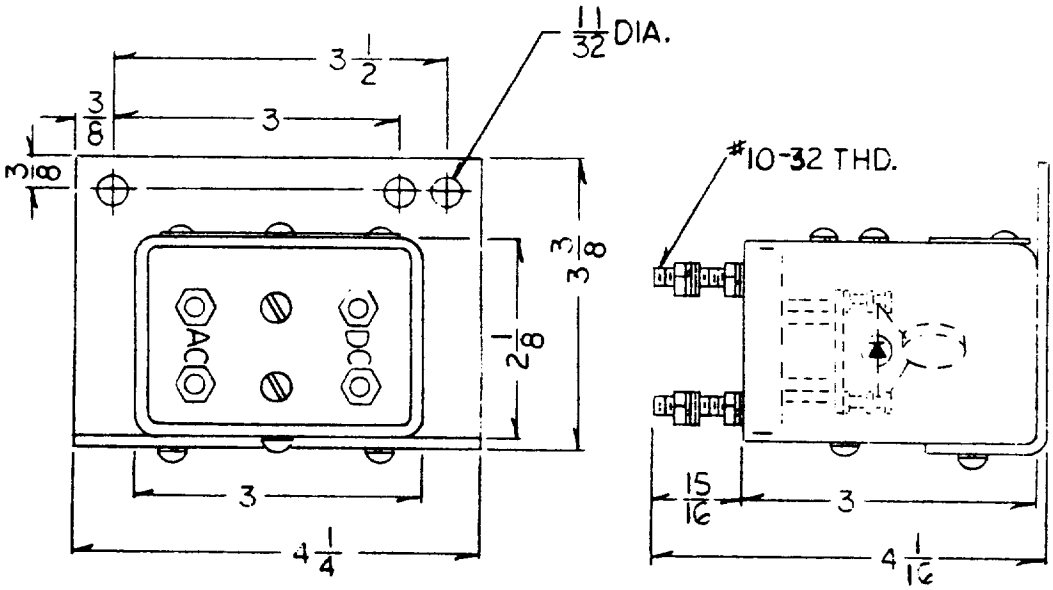

Fig. 12 (0246A6996-0) Outline and Panel Drilling for External Rectifier Used with AC Voltage Rated HGA17 Relays