GE Power Management

F35 Multiple Feeder Management Relay

UR Series Instruction Manual

F35 Revision: 2.9X

Manual P/N: 1601-0106-B5 (GEK-106276B)

832739A1.CDR

GE Power Management

215 Anderson Avenue, Markham, Ontario

Canada L6E 1B3

Tel: (905) 294-6222 Fax: (905) 294-8512

Internet: http://www.GEindustrial.com/pm

Manufactured under an ISO9000 Registered system.

ADDENDUM

This Addendum contains information that relates to the F35 relay, version 2.9X. This addendum lists a number of information items that appear in the instruction manual GEK-106276B (1601-0106-B5) but are not included in the current F35 operations.

NOTE:

- The UCA2 specifications are not yet finalized. There will be changes to the object models described in Appendix C: UCA/MMS.

GE Power Management

215 Anderson Avenue, Markham, Ontario

Canada L6E 1B3

Tel: (905) 294-6222 Fax: (905) 294-8512

Internet: http://www.GEindustrial.com/pm

TABLE OF CONTENTS

1. GETTING STARTED

1.1 IMPORTANT PROCEDURES
1.1.1 CAUTIONS AND WARNINGS 1-1
1.1.2 INSPECTION CHECKLIST 1-1

1.2 UR OVERVIEW
1.2.1 INTRODUCTION TO THE UR RELAY 1-2
1.2.2 UR HARDWARE ARCHITECTURE 1-3
1.2.3 UR SOFTWARE ARCHITECTURE 1-4
1.2.4 IMPORTANT UR CONCEPTS 1-4

1.3 URPC SOFTWARE
1.3.1 PC REQUIREMENTS 1-5
1.3.2 SOFTWARE INSTALLATION 1-5
1.3.3 CONNECTING URPC® WITH THE F35 1-6

1.4 UR HARDWARE
1.4.1 MOUNTING AND WIRING 1-8
1.4.2 COMMUNICATIONS 1-8
1.4.3 FACEPLATE DISPLAY 1-8

1.5 USING THE RELAY
1.5.1 FACEPLATE KEYPAD 1-9
1.5.2 MENU NAVIGATION 1-9
1.5.3 MENU HIERARCHY 1-9
1.5.4 RELAY ACTIVATION 1-10
1.5.5 BATTERY TAB 1-10
1.5.6 RELAY PASSWORDS 1-10
1.5.7 FLEXLOGIC™ CUSTOMIZATION 1-10
1.5.8 COMMISSIONING 1-10

2. PRODUCT DESCRIPTION

2.1 INTRODUCTION
2.1.1 OVERVIEW 2-1
2.1.2 ORDERING 2-3

2.2 TECHNICAL SPECIFICATIONS
2.2.1 PROTECTION ELEMENTS 2-5
2.2.2 USER-PROGRAMMABLE ELEMENTS 2-6
2.2.3 MONITORING 2-6
2.2.4 METERING 2-7
2.2.5 INPUTS 2-7
2.2.6 POWER SUPPLY 2-8
2.2.7 OUTPUTS 2-8
2.2.8 COMMUNICATIONS 2-8
2.2.9 ENVIRONMENTAL 2-8
2.2.10 TYPE TESTS 2-9
2.2.11 PRODUCTION TESTS 2-9
2.2.12 APPROVALS 2-9
2.2.13 MAINTENANCE 2-9

3. HARDWARE

3.1 DESCRIPTION
3.1.1 PANEL CUTOUT 3-1
3.1.2 MODULE WITHDRAWAL/INSERTION 3-4
3.1.3 REAR TERMINAL LAYOUT 3-5
3.1.4 REAR TERMINAL ASSIGNMENTS 3-5

3.2 WIRING
3.2.1 TYPICAL WIRING DIAGRAM 3-6
3.2.2 DIELECTRIC STRENGTH RATINGS AND TESTING 3-7
3.2.3 CONTROL POWER 3-7
3.2.4 CT/VT MODULES 3-8
3.2.5 CONTACT INPUTS/OUTPUTS 3-10
3.2.6 TRANSDUCER INPUTS/OUTPUTS 3-16
3.2.7 RS232 FACEPLATE PROGRAM PORT 3-17
3.2.8 CPU COMMUNICATION PORTS 3-17

3.2.9 IRIG-B 3-19

4. HUMAN INTERFACES

4.1 URPC® SOFTWARE INTERFACE

4.1.1 GRAPHICAL USER INTERFACE 4-1
4.1.2 CREATING A SITE LIST 4-1
4.1.3 URPC® SOFTWARE OVERVIEW 4-1
4.1.4 URPC® SOFTWARE MAIN WINDOW 4-3

4.2 FACEPLATE INTERFACE

4.2.1 FACEPLATE 4-4
4.2.2 LED INDICATORS 4-5
4.2.3 CUSTOM LABELING OF LEDs 4-7
4.2.4 CUSTOMIZING THE DISPLAY MODULE 4-7
4.2.5 DISPLAY 4-8
4.2.6 KEYPAD 4-8
4.2.7 MENUS 4-9
4.2.8 CHANGING SETTINGS 4-10

5. SETTINGS

5.1 OVERVIEW

5.1.1 SETTINGS MAIN MENU 5-1
5.1.2 INTRODUCTION TO ELEMENTS 5-3
5.1.3 INTRODUCTION TO AC SOURCES 5-4

5.2 PRODUCT SETUP

5.2.1 PASSWORD SECURITY 5-7
5.2.2 DISPLAY PROPERTIES 5-8
5.2.3 COMMUNICATIONS 5-8
5.2.4 MODBUS USER MAP 5-15
5.2.5 REAL TIME CLOCK 5-15
5.2.6 OSCILLOGRAPHY 5-16
5.2.7 DATA LOGGER 5-18
5.2.8 DEMAND 5-18
5.2.9 USER-PROGRAMMABLE LEDS 5-20
5.2.10 FLEX STATE PARAMETERS 5-21
5.2.11 USER-DEFINABLE DISPLAYS 5-21
5.2.12 INSTALLATION 5-23

5.3 SYSTEM SETUP

5.3.1 AC INPUTS 5-24
5.3.2 POWER SYSTEM 5-25
5.3.3 SIGNAL SOURCES 5-26
5.3.4 FLEXCURVES™ 5-28

5.4 FLEXLOGIC™

5.4.1 INTRODUCTION TO FLEXLOGIC™ 5-29
5.4.2 FLEXLOGIC™ RULES 5-34
5.4.3 FLEXLOGIC™ EVALUATION 5-35
5.4.4 FLEXLOGIC™ PROCEDURE EXAMPLE 5-35
5.4.5 FLEXLOGIC™ EQUATION EDITOR 5-40
5.4.6 FLEXLOGIC™ TIMERS 5-40
5.4.7 FLEXELEMENTS™ 5-41

5.5 GROUPED ELEMENTS

5.5.1 OVERVIEW 5-45
5.5.2 SETTING GROUP 5-45
5.5.3 CURRENT ELEMENTS 5-45
5.5.4 INVERSE TIME OVERCURRENT CURVE CHARACTERISTICS 5-48
5.5.5 PHASE CURRENT 5-53
5.5.6 NEUTRAL CURRENT 5-56
5.5.7 GROUND CURRENT 5-58
5.5.8 VOLTAGE ELEMENTS 5-60
5.5.9 PHASE VOLTAGE 5-61
5.5.10 NEUTRAL VOLTAGE 5-62
5.5.11 AUXILIARY VOLTAGE 5-63

5.6 CONTROL ELEMENTS
5.6.1 OVERVIEW 5-65
5.6.2 SETTING GROUPS 5-65
5.6.3 UNDERFREQUENCY 5-66
5.6.4 AUTORECLOSE 5-67
5.6.5 DIGITAL ELEMENTS 5-74

5.7 INPUTS / OUTPUTS
5.7.1 CONTACT INPUTS 5-77
5.7.2 VIRTUAL INPUTS 5-79
5.7.3 UCA SBO TIMER 5-80
5.7.4 CONTACT OUTPUTS 5-80
5.7.5 VIRTUAL OUTPUTS 5-81
5.7.6 REMOTE DEVICES 5-81
5.7.7 REMOTE INPUTS 5-82
5.7.8 REMOTE OUTPUTS: DNA BIT PAIRS 5-83
5.7.9 REMOTE OUTPUTS: UserSt BIT PAIRS 5-84
5.7.10 RESETTING 5-84

5.8 TRANSDUCER I/O
5.8.1 DCMA INPUTS 5-85
5.8.2 RTD INPUTS 5-86

5.9 TESTING
5.9.1 TEST MODE 5-87
5.9.2 FORCE CONTACT INPUTS 5-87
5.9.3 FORCE CONTACT OUTPUTS 5-87

6. ACTUAL VALUES

6.1 OVERVIEW
6.1.1 ACTUAL VALUES MAIN MENU 6-1

6.2 STATUS
6.2.1 CONTACT INPUTS 6-3
6.2.2 VIRTUAL INPUTS 6-3
6.2.3 REMOTE INPUTS 6-3
6.2.4 CONTACT OUTPUTS 6-4
6.2.5 VIRTUAL OUTPUTS 6-4
6.2.6 AUTORECLOSE 6-4
6.2.7 REMOTE DEVICES STATUS 6-4
6.2.8 REMOTE DEVICES STATISTICS 6-5
6.2.9 FLEX STATES 6-5
6.2.10 ETHERNET 6-5

6.3 METERING
6.3.1 METERING CONVENTIONS 6-6
6.3.2 UR CONVENTION FOR MEASURING SYMMETRICAL COMPONENTS 6-7
6.3.3 SOURCES 6-9
6.3.4 TRACKING FREQUENCY 6-12
6.3.5 FLEXELEMENTS™ 6-13
6.3.6 TRANSDUCER I/O 6-13

6.4 RECORDS
6.4.1 EVENT RECORDS 6-14
6.4.2 OSCILLOGRAPHY 6-14
6.4.3 DATA LOGGER 6-14

6.5 PRODUCT INFORMATION
6.5.1 MODEL INFORMATION 6-15
6.5.2 FIRMWARE REVISIONS 6-15

7. COMMANDS AND TARGETS

7.1 COMMANDS
7.1.1 COMMANDS MENU 7-1
7.1.2 VIRTUAL INPUTS 7-1
7.1.3 CLEAR RECORDS 7-2
7.1.4 SET DATE AND TIME 7-2

7.1.5 RELAY MAINTENANCE 7-2

7.2 TARGETS

7.2.1 TARGETS MENU 7-3
7.2.2 TARGET MESSAGES 7-3
7.2.3 RELAY SELF-TESTS 7-3

8. COMMISSIONING

8.1 PRODUCT SETUP

8.1.1 SETTINGS 8-1

8.2 SYSTEM SETUP

8.2.1 SETTINGS 8-8
8.2.2 FLEXCURVE™ A 8-10
8.2.3 FLEXCURVE™ B 8-11

8.3 GROUPED ELEMENTS

8.3.1 SETTINGS 8-12

8.4 CONTROL ELEMENTS

8.4.1 SETTINGS 8-19

8.5 INPUTS / OUTPUTS

8.5.1 CONTACT INPUTS 8-23
8.5.2 VIRTUAL INPUTS 8-24
8.5.3 UCA SBO TIMER 8-24
8.5.4 CONTACT OUTPUTS 8-25
8.5.5 VIRTUAL OUTPUTS 8-26
8.5.6 REMOTE DEVICES 8-27
8.5.7 REMOTE INPUTS 8-28
8.5.8 REMOTE OUTPUTS 8-29
8.5.9 RESETTING 8-29

8.6 TRANSDUCER I/O

8.6.1 DCMA INPUTS 8-30
8.6.2 RTD INPUTS 8-31

8.7 TESTING

8.7.1 FORCE CONTACT INPUTS/OUTPUTS 8-32

A. FLEXANALOG

A.1 PARAMETERS

A.1.1 PARAMETER LIST A-1

B. MODBUS® RTU PROTOCOL

B.1 OVERVIEW

B.1.1 INTRODUCTION B-1
B.1.2 PHYSICAL LAYER B-1
B.1.3 DATA LINK LAYER B-1
B.1.4 CRC-16 ALGORITHM B-3

B.2 FUNCTION CODES

B.2.1 SUPPORTED FUNCTION CODES B-4
B.2.2 FUNCTION CODE 03H/04H: READ ACTUAL VALUES OR SETTINGS B-4
B.2.3 FUNCTION CODE 05H: EXECUTE OPERATION B-5
B.2.4 FUNCTION CODE 06H: STORE SINGLE SETTING B-5
B.2.5 FUNCTION CODE 10H: STORE MULTIPLE SETTINGS B-6
B.2.6 EXCEPTION RESPONSES B-6

B.3 FILE TRANSFERS

B.3.1 OBTAINING UR FILES USING MODBUS® PROTOCOL B-7
B.3.2 MODBUS® PASSWORD OPERATION B-8

B.4 MEMORY MAPPING

B.4.1 MODBUS® MEMORY MAP B-9
B.4.2 MEMORY MAP DATA FORMATS B-37

C. UCA/MMS

C.1 UCA/MMS OVERVIEW

C.1.1 UCA C-1
C.1.2 MMS C-1
C.1.3 UCA REPORTING C-6

D. IEC 60870-5-104 PROTOCOL

D.1 IEC 60870-5-104

D.1.1 INTEROPERABILITY DOCUMENT D-1
D.1.2 POINTS LIST D-10

E. DNP

E.1 DNP DEVICE PROFILE

E.1.1 DNP V3.00 DEVICE PROFILE E-1

E.2 DNP IMPLEMENTATION TABLE

E.2.1 IMPLEMENTATION TABLE E-4

E.3 DNP POINT LISTS

E.3.1 BINARY INPUT POINTS E-8
E.3.2 BINARY OUTPUT AND CONTROL RELAY OUTPUT E-13
E.3.3 COUNTERS E-14
E.3.4 ANALOG INPUTS E-15

F. MISCELLANEOUS

F.1 CHANGE NOTES

F.1.1 REVISION HISTORY F-1
F.1.2 CHANGES TO F35 MANUAL F-1

F.2 FIGURES AND TABLES

F.2.1 LIST OF FIGURES F-3
F.2.2 LIST OF TABLES F-4

F.3 ABBREVIATIONS

F.3.1 STANDARD ABBREVIATIONS F-6

F.4 WARRANTY

F.4.1 GE POWER MANAGEMENT WARRANTY F-9

INDEX

Please read this chapter to help guide you through the initial setup of your new relay.

1.1.1 CAUTIONS AND WARNINGS

WARNING CAUTION

Before attempting to install or use the relay, it is imperative that all WARNINGS and CAUTIONS in this manual are reviewed to help prevent personal injury, equipment damage, and/or downtime.

1.1.2 INSPECTION CHECKLIST

- Open the relay packaging and inspect the unit for physical damage.
- Check that the battery tab is intact on the power supply module (for more details, see the section BATTERY TAB in this chapter).
- View the rear name-plate and verify that the correct model has been ordered.

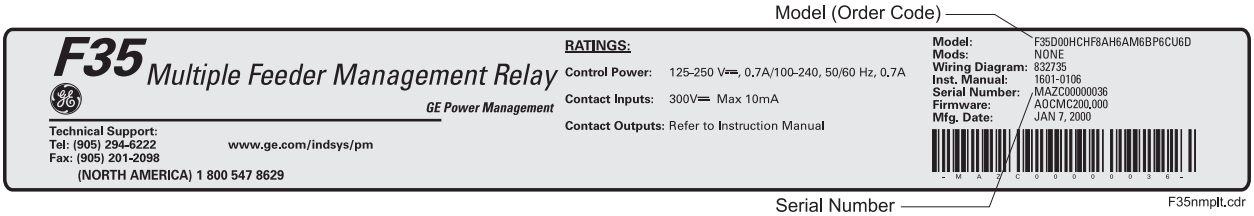

Figure 1–1: REAR NAME-PLATE (EXAMPLE)

- Ensure that the following items are included:
  - Instruction Manual
  - Products CD (includes URPC software and manuals in PDF format)
  - mounting screws
  - registration card (attached as the last page of the manual)
- Fill out the registration form and mail it back to GE Power Management (include the serial number located on the rear nameplate).
- For product information, instruction manual updates, and the latest software updates, please visit the GE Power Management Home Page.

NOTE

If there is any noticeable physical damage, or any of the contents listed are missing, please contact GE Power Management immediately.

***GE POWER MANAGEMENT* CONTACT INFORMATION AND CALL CENTER FOR PRODUCT SUPPORT:**

GE Power Management
215 Anderson Avenue
Markham, Ontario
Canada L6E 1B3

TELEPHONE: (905) 294-6222, 1-800-547-8629 (North America only)
FAX: (905) 201-2098
E-MAIL: info.pm@indsys.ge.com
HOME PAGE: http://www.GEindustrial.com/pm

1.2.1 INTRODUCTION TO THE UR RELAY

Historically, substation protection, control, and metering functions were performed with electromechanical equipment. This first generation of equipment was gradually replaced by analog electronic equipment, most of which emulated the single-function approach of their electromechanical precursors. Both of these technologies required expensive cabling and auxiliary equipment to produce functioning systems.

Recently, digital electronic equipment has begun to provide protection, control, and metering functions. Initially, this equipment was either single function or had very limited multi-function capability, and did not significantly reduce the cabling and auxiliary equipment required. However, recent digital relays have become quite multi-functional, reducing cabling and auxiliaries significantly. These devices also transfer data to central control facilities and Human Machine Interfaces using electronic communications. The functions performed by these products have become so broad that many users now prefer the term IED (Intelligent Electronic Device).

It is obvious to station designers that the amount of cabling and auxiliary equipment installed in stations can be even further reduced, to 20% to 70% of the levels common in 1990, to achieve large cost reductions. This requires placing even more functions within the IEDs.

Users of power equipment are also interested in reducing cost by improving power quality and personnel productivity, and as always, in increasing system reliability and efficiency. These objectives are realized through software which is used to perform functions at both the station and supervisory levels. The use of these systems is growing rapidly.

High speed communications are required to meet the data transfer rates required by modern automatic control and monitoring systems. In the near future, very high speed communications will be required to perform protection signaling with a performance target response time for a command signal between two IEDs, from transmission to reception, of less than 5 milliseconds. This has been established by the Electric Power Research Institute, a collective body of many American and Canadian power utilities, in their Utilities Communications Architecture 2 (MMS/UCA2) project. In late 1998, some European utilities began to show an interest in this ongoing initiative.

IEDs with the capabilities outlined above will also provide significantly more power system data than is presently available, enhance operations and maintenance, and permit the use of adaptive system configuration for protection and control systems. This new generation of equipment must also be easily incorporated into automation systems, at both the station and enterprise levels. The GE Power Management Universal Relay (UR) has been developed to meet these goals.

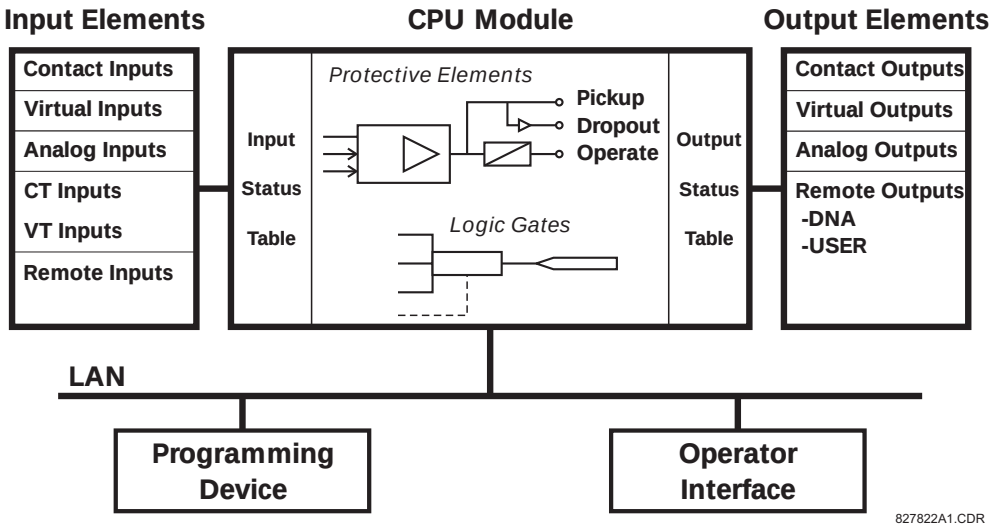

Figure 1–2: UR CONCEPT BLOCK DIAGRAM

a) UR BASIC DESIGN

The UR is a digital-based device containing a central processing unit (CPU) that handles multiple types of input and output signals. The UR can communicate over a local area network (LAN) with an operator interface, a programming device, or another UR device.

The **CPU module** contains firmware that provides protection elements in the form of logic algorithms, as well as programmable logic gates, timers, and latches for control features.

Input elements accept a variety of analog or digital signals from the field. The UR isolates and converts these signals into logic signals used by the relay.

Output elements convert and isolate the logic signals generated by the relay into digital or analog signals that can be used to control field devices.

b) UR SIGNAL TYPES

The **contact inputs and outputs** are digital signals associated with connections to hard-wired contacts. Both ‘wet’ and ‘dry’ contacts are supported.

The **virtual inputs and outputs** are digital signals associated with UR internal logic signals. Virtual inputs include signals generated by the local user interface. The virtual outputs are outputs of FlexLogic™ equations used to customize the UR device. Virtual outputs can also serve as virtual inputs to FlexLogic™ equations.

The **analog inputs and outputs** are signals that are associated with transducers, such as Resistance Temperature Detectors (RTDs).

The **CT and VT inputs** refer to analog current transformer and voltage transformer signals used to monitor AC power lines. The UR supports 1 A and 5 A CTs.

The **remote inputs and outputs** provide a means of sharing digital point state information between remote UR devices. The remote outputs interface to the remote inputs of other UR devices. Remote outputs are FlexLogic™ operands inserted into UCA2 GOOSE messages and are of two assignment types: DNA standard functions and USER defined functions.

1

c) UR SCAN OPERATION

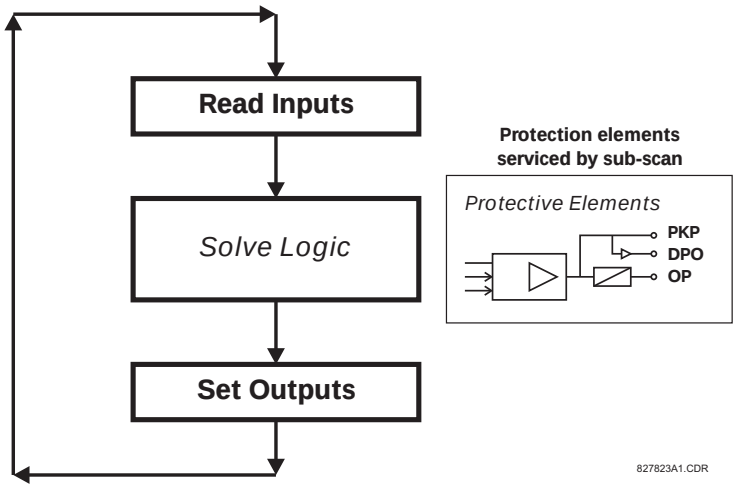

Figure 1–3: UR SCAN OPERATION

The UR device operates in a cyclic scan fashion. The UR reads the inputs into an input status table, solves the logic program (FlexLogic™ equation), and then sets each output to the appropriate state in an output status table. Any resulting task execution is priority interrupt-driven.

1.2.3 UR SOFTWARE ARCHITECTURE

The firmware (software embedded in the relay) is designed in functional modules which can be installed in any relay as required. This is achieved with Object-Oriented Design and Programming (OOD/OOP) techniques.

Object-Oriented techniques involve the use of ‘objects’ and ‘classes’. An ‘object’ is defined as “a logical entity that contains both data and code that manipulates that data”. A ‘class’ is the generalized form of similar objects. By using this concept, one can create a Protection Class with the Protection Elements as objects of the class such as Time Overcurrent, Instantaneous Overcurrent, Current Differential, Undervoltage, Overvoltage, Underfrequency, and Distance. These objects represent completely self-contained software modules. The same object-class concept can be used for Metering, I/O Control, HMI, Communications, or any functional entity in the system.

Employing OOD/OOP in the software architecture of the Universal Relay achieves the same features as the hardware architecture: modularity, scalability, and flexibility. The application software for any Universal Relay (e.g. Feeder Protection, Transformer Protection, Distance Protection) is constructed by combining objects from the various functionality classes. This results in a ’common look and feel’ across the entire family of UR platform-based applications.

1.2.4 IMPORTANT UR CONCEPTS

As described above, the architecture of the UR relay is different from previous devices. In order to achieve a general understanding of this device, some sections of Chapter 5 are quite helpful. The most important functions of the relay are contained in "Elements". A description of UR elements can be found in the INTRODUCTION TO ELEMENTS section. An example of a simple element, and some of the organization of this manual, can be found in the DIGITAL ELEMENTS MENU section. An explanation of the use of inputs from CTs and VTs is in the INTRODUCTION TO AC SOURCES section. A description of how digital signals are used and routed within the relay is contained in the INTRODUCTION TO FLEXLOGIC™ section.

1.3.1 PC REQUIREMENTS

The Faceplate keypad and display or the URPC software interface can be used to communicate with the relay.

The URPC software interface is the preferred method to edit settings and view actual values because the PC monitor can display more information in a simple comprehensible format.

The following minimum requirements must be met for the URPC software to properly operate on a PC.

Processor:	Intel® Pentium 300 or higher
RAM Memory:	64 MB minimum (128 MB recommended)
Hard Disk:	50 MB free space required before installation of URPC software
O/S:	Windows® NT 4.x or Windows® 9x/2000
Device:	CD-ROM drive
Port:	COM1(2) / Ethernet

1.3.2 SOFTWARE INSTALLATION

Refer to the following procedure to install the URPC software:

1. **Start** the Windows® operating system.
2. **Insert** the URPC software CD into the CD-ROM drive.
3. If the installation program does not start automatically, choose **Run** from the Windows® **Start** menu and type D:\SETUP.EXE. Press Enter to start the installation.
4. Follow the on-screen instructions to install the URPC software. When the **Welcome** window appears, click on **Next** to continue with the installation procedure.
5. When the **Choose Destination Location** window appears and if the software is not to be located in the default directory, click **Browse** and type in the complete path name including the new directory name.
6. Click **Next** to continue with the installation procedure.
7. The default program group where the application will be added to is shown in the **Select Program Folder** window. If it is desired that the application be added to an already existing program group, choose the group name from the list shown.
8. Click **Next** to begin the installation process.
9. To launch the URPC application, click Finish in the Setup Complete window.
10. Subsequently, double click on the URPC software icon to activate the application.

NOTE

Refer to the HUMAN INTERFACES chapter in this manual and the URPC Software Help program for more information about the URPC software interface.

1.3.3 CONNECTING URPC® WITH THE F35

This section is intended as a quick start guide to using the URPC software. Please refer to the URPC Help File and the HUMAN INTERFACES chapter for more information.

a) CONFIGURING AN ETHERNET CONNECTION

Before starting, verify that the Ethernet network cable is properly connected to the Ethernet port on the back of the relay.

1. Start the URPC software. Enter the password "URPC" at the login password box.
2. Select the **Help > Connection Wizard** menu item to open the Connection Wizard. Click "Next" to continue.
3. Click the "New Interface" button to open the Edit New Interface window.
   - Enter the desired interface name in the **Enter Interface Name** field.
   - Select the "Ethernet" interface from the drop down list and press "Next" to continue.
4. Click the "New Device" button to open the Edit New Device Window.
   - Enter the desired name in the **Enter Interface Name** field.
   - Enter the Modbus address of the relay (from SETTINGS ⇨ PRODUCT SETUP ⇨⇩ COMMUNICATIONS ⇨⇩ MODBUS PROTOCOL ⇨ MODBUS SLAVE ADDRESS) in the **Enter Modbus Address** field.
   - Enter the IP address (from SETTINGS ⇨ PRODUCT SETUP ⇨⇩ COMMUNICATIONS ⇨⇩ NETWORK ⇨ IP ADDRESS) in the **Enter TCPIP Address** field.
5. Click the "4.1 Read Device Information" button then "OK" when the relay information has been received. Click "Next" to continue.
6. Click the "New Site" button to open the Edit Site Name window.
   - Enter the desired site name in the **Enter Site Name** field.
7. Click the "OK" button then click "Finish". The new Site List tree will be added to the Site List window (or Online window) located in the top left corner of the main URPC window.

The Site Device has now been configured for Ethernet communications. Proceed to Section c) CONNECTING TO THE RELAY below to begin communications.

b) CONFIGURING AN RS232 CONNECTION

Before starting, verify that the RS232 serial cable is properly connected to the RS232 port on the front panel of the relay.

1. Start the URPC software. Enter the password "URPC" at the login password box.
2. Select the **Help > Connection Wizard** menu item to open the Connection Wizard. Click "Next" to continue.
3. Click the "New Interface" button to open the Edit New Interface window.
   - Enter the desired interface name in the **Enter Interface Name** field.
   - Select the "RS232" interface from the drop down list and press "Next" to continue.
4. Click the "New Device" button to open the Edit New Device Window.
   - Enter the desired name in the **Enter Interface Name** field.
   - Enter the PC COM port number in the **COM Port** field.
5. Click "OK" then click "Next" to continue.
6. Click the "New Site" button to open the Edit Site Name window.
   - Enter the desired site name in the **Enter Site Name** field.
7. Click the "OK" button then click "Finish". The new Site List tree will be added to the Site List window (or Online window) located in the top left corner of the main URPC window.

The Site Device has now been configured for RS232 communications. Proceed to Section c) CONNECTING TO THE RELAY below to begin communications.

c) CONNECTING TO THE RELAY

1. Select the Display Properties window through the Site List tree as shown below:

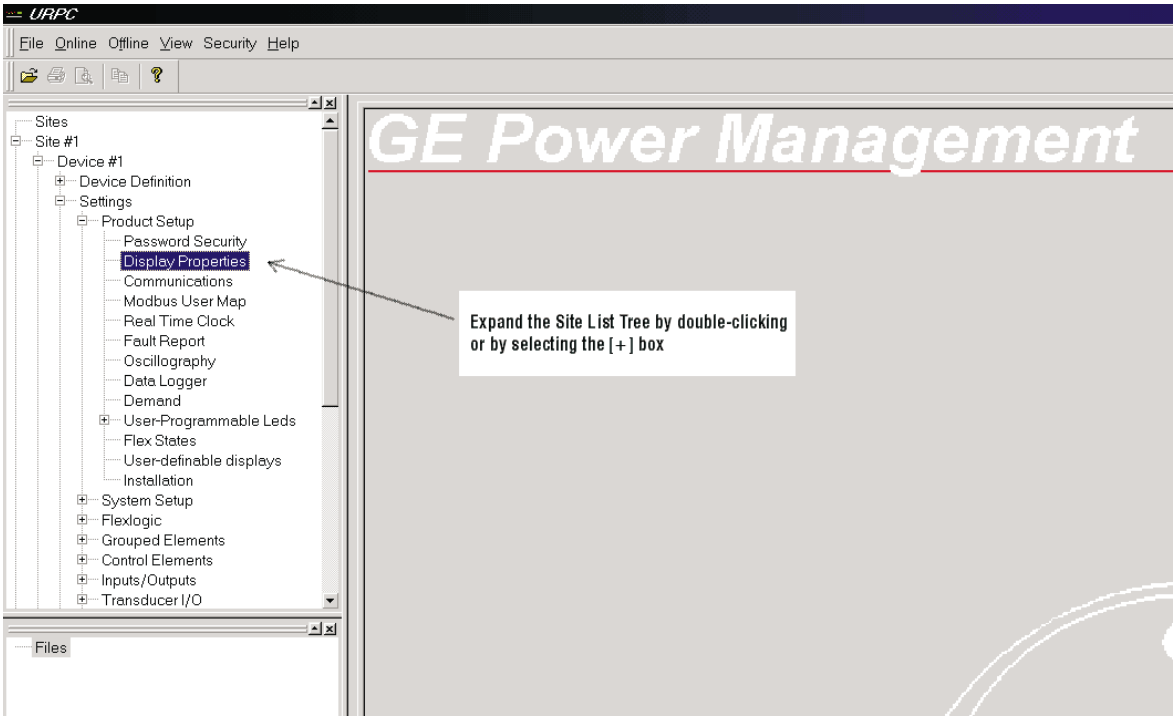

2. The Display Properties window will open with a flashing status indicator.
   - If the indicator is red, click the Connect button (lightning bolt) in the menu bar of the Displayed Properties window.
3. In a few moments, the flashing light should turn green, indicating that URPC is communicating with the relay.

NOTE

Refer to the HUMAN INTERFACES chapter in this manual and the URPC Software Help program for more information about the URPC software interface.

1.4.1 MOUNTING AND WIRING

Please refer to the HARDWARE chapter for detailed relay mounting and wiring instructions. Review all **WARNINGS AND CAUTIONS**.

1.4.2 COMMUNICATIONS

The URPC software communicates to the relay via the faceplate RS232 port or the rear panel RS485 / Ethernet ports. To communicate via the faceplate RS232 port, a standard “straight-through” serial cable is used. The DB-9 male end is connected to the relay and the DB-9 or DB-25 female end is connected to the PC COM1 or COM2 port as described in the HARDWARE chapter.

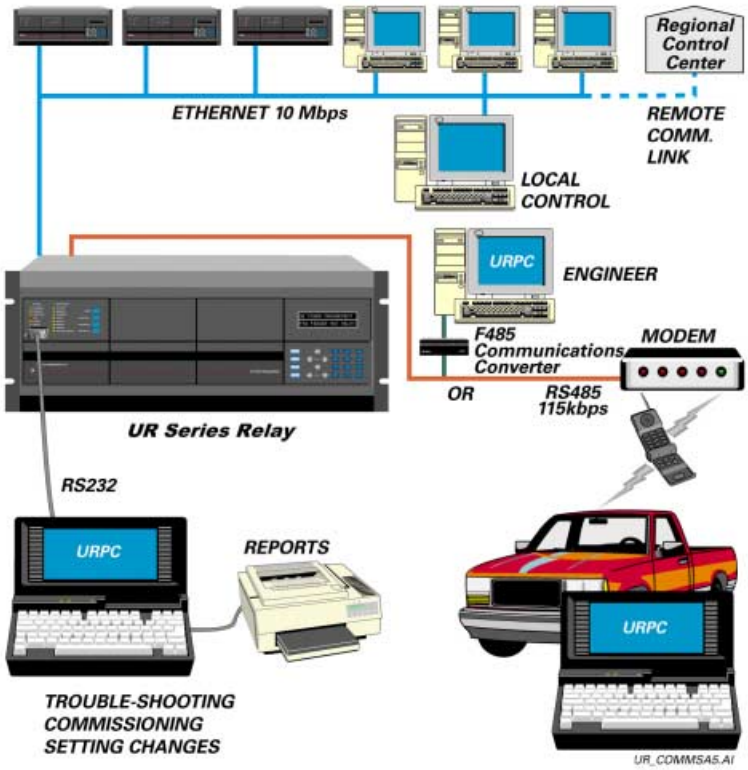

Figure 1–4: RELAY COMMUNICATIONS OPTIONS

To communicate through the F35 rear RS485 port from a PC RS232 port, the GE Power Management RS232/RS485 converter box is required. This device (catalog number F485) connects to the computer using a "straight-through" serial cable. A shielded twisted-pair (20, 22, or 24 AWG) connects the F485 converter to the F35 rear communications port. The converter terminals (+, –, GND) are connected to the F35 communication module (+, –, COM) terminals. Refer to the CPU COMMUNICATION PORTS section in the HARDWARE chapter for option details. The line should be terminated with an R-C network (i.e. 120 Ω, 1 nF) as described in the HARDWARE chapter.

1.4.3 FACEPLATE DISPLAY

All messages are displayed on a 2 × 20 character vacuum fluorescent display to make them visible under poor lighting conditions. Messages are displayed in English and do not require the aid of an instruction manual for deciphering. While the keypad and display are not actively being used, the display will default to defined messages. Any high priority event driven message will automatically override the default message and appear on the display.

1.5.1 FACEPLATE KEYPAD

Display messages are organized into 'pages' under the following headings: Actual Values, Settings, Commands, and Targets. The MENU key navigates through these pages. Each heading page is broken down further into logical subgroups.

The ▲ ◀ MESSAGE ▶ ▼ keys navigate through the subgroups. The ▲ VALUE ▼ keys scroll increment or decrement numerical setting values when in programming mode. These keys also scroll through alphanumeric values in the text edit mode. Alternatively, values may also be entered with the numeric keypad.

The . key initiates and advance to the next character in text edit mode or enters a decimal point. The HELP key may be pressed at any time for context sensitive help messages. The ENTER key stores altered setting values.

1.5.2 MENU NAVIGATION

Press the MENU key to select the desired header display page (top-level menu). The header title appears momentarily followed by a header display page menu item. Each press of the MENU key advances through the main heading pages as illustrated below.

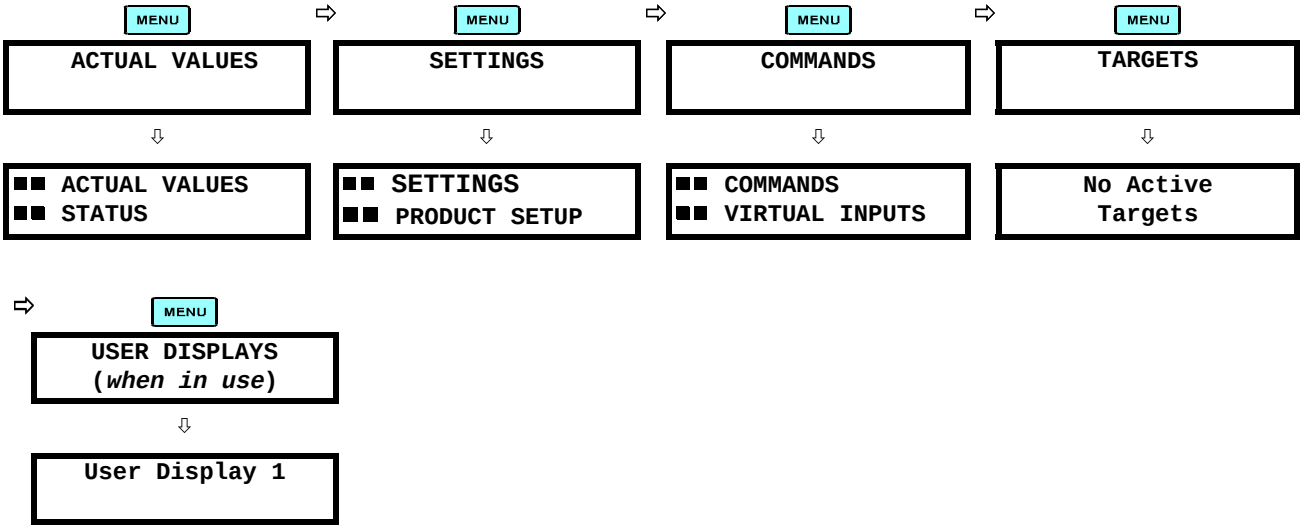

1.5.3 MENU HIERARCHY

The setting and actual value messages are arranged hierarchically. The header display pages are indicated by double scroll bar characters (■■), while sub-header pages are indicated by single scroll bar characters (■). The header display pages represent the highest level of the hierarchy and the sub-header display pages fall below this level. The MESSAGE ▲ and ▼ keys move within a group of headers, sub-headers, setting values, or actual values. Continually pressing the MESSAGE ▶ key from a header display displays specific information for the header category. Conversely, continually pressing the ◀ MESSAGE key from a setting value or actual value display returns to the header display.

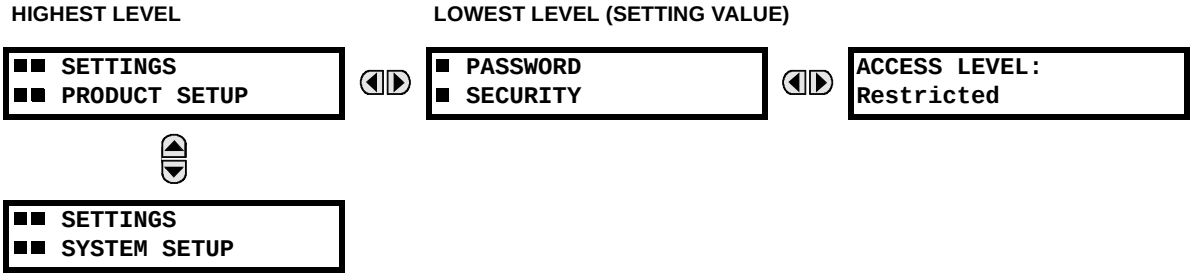

1.5.4 RELAY ACTIVATION

The relay is defaulted to the "Not Programmed" state when it leaves the factory. This safeguards against the installation of a relay whose settings have not been entered. When powered up successfully, the TROUBLE indicator will be on and the IN SERVICE indicator off. The relay in the "Not Programmed" state will block signaling of any output relay. These conditions will remain until the relay is explicitly put in the "Programmed" state.

Select the menu message **SETTINGS ⇨ PRODUCT SETUP ⇨⇩ INSTALLATION ⇨ RELAY SETTINGS**

```
RELAY SETTINGS:
Not Programmed
```

To put the relay in the "Programmed" state, press either of the ▲ VALUE ▼ keys once and then press ENTER. The faceplate TROUBLE indicator will turn off and the IN SERVICE indicator will turn on. The settings for the relay can be programmed manually (refer to the SETTINGS chapter) via the faceplate keypad or remotely (refer to the URPC Help file) via the URPC software interface.

1.5.5 BATTERY TAB

The battery tab is installed in the power supply module before the F35 shipped from the factory. The battery tab prolongs battery life in the event the relay is powered down for long periods of time before installation. The battery is responsible for backing up event records, oscillography, data logger, and real-time clock information when the relay is powered off. The battery failure self-test error generated by the relay is a minor and should not affect the relay functionality. When the relay is installed and ready for commissioning, the tab should be removed. The battery tab should be re-inserted if the relay is powered off for an extended period of time. If required, contact the factory for a replacement battery or battery tab.

1.5.6 RELAY PASSWORDS

It is recommended that passwords be set up for each security level and assigned to specific personnel. There are two user password SECURITY access levels:

1. COMMAND

The COMMAND access level restricts the user from making any settings changes, but allows the user to perform the following operations:

- change state of virtual inputs
- clear event records
- clear oscillography records

2. SETTING

The SETTING access level allows the user to make any changes to any of the setting values.

NOTE **Refer to the CHANGING SETTINGS section (in the HUMAN INTERFACES chapter) for complete instructions on setting up security level passwords.**

1.5.7 FLEXLOGIC™ CUSTOMIZATION

FlexLogic™ equation editing is required for setting up user-defined logic for customizing the relay operations. See section FLEXLOGIC™ in the SETTINGS chapter.

1.5.8 COMMISSIONING

Templated tables for charting all the required settings before entering them via the keypad are available in the COMMISSIONING chapter.

2.1.1 OVERVIEW

The F35 Multiple Feeder Management Relay is a microprocessor based relay designed for the protection of up to 5 feeders with busbar voltage measurement or up to 6 feeders without busbar voltage.

Overcurrent and undervoltage protection, breaker recloser, underfrequency, fault diagnostics, and RTU functions are provided. The F35 provides phase, neutral/ground, instantaneous and time overcurrent protection. The time overcurrent function provides multiple curve shapes or FlexCurve™ for optimum co-ordination.

Voltage and current metering is built into the relay as a standard feature. Current parameters are available as total waveform RMS magnitude, or as fundamental frequency only RMS magnitude and angle (phasor).

Diagnostic features include a sequence of records capable of storing 1024 time-tagged events. The internal clock used for time-tagging can be synchronized with an IRIG-B signal. This precise time stamping allows the sequence of events to be determined throughout the system. Events can also be programmed (via FlexLogic™ equations) to trigger oscillography data capture which may be set to record the measured parameters before and after the event for viewing on a personal computer (PC). These tools significantly reduce troubleshooting time and simplify report generation in the event of a system fault.

A faceplate RS232 port may be used to connect to a PC for the programming of settings and the monitoring of actual values. A variety of communications modules are available. Two rear RS485 ports allow independent access by operating and engineering staff. All serial ports use the Modbus® RTU protocol. The RS485 ports may be connected to system computers with baud rates up to 115.2 kbps. The RS232 port has a fixed baud rate of 19.2 kbps. Optional communications modules include a 10BaseF Ethernet interface which can be used to provide fast, reliable communications in noisy environments. Another option provides two 10BaseF fiber optic ports for redundancy. The Ethernet port supports MMS/UCA2, Modbus®/TCP, and TFTP protocols, and allows access to the relay via any standard web browser (UR web pages). The DNP 3.0 or IEC 60870-5-104 protocol is supported on a user-specified port, including serial and Ethernet ports.

The relay uses flash memory technology which allows field upgrading as new features are added. The following SINGLE LINE DIAGRAM illustrates the relay functionality using ANSI (American National Standards Institute) device numbers.

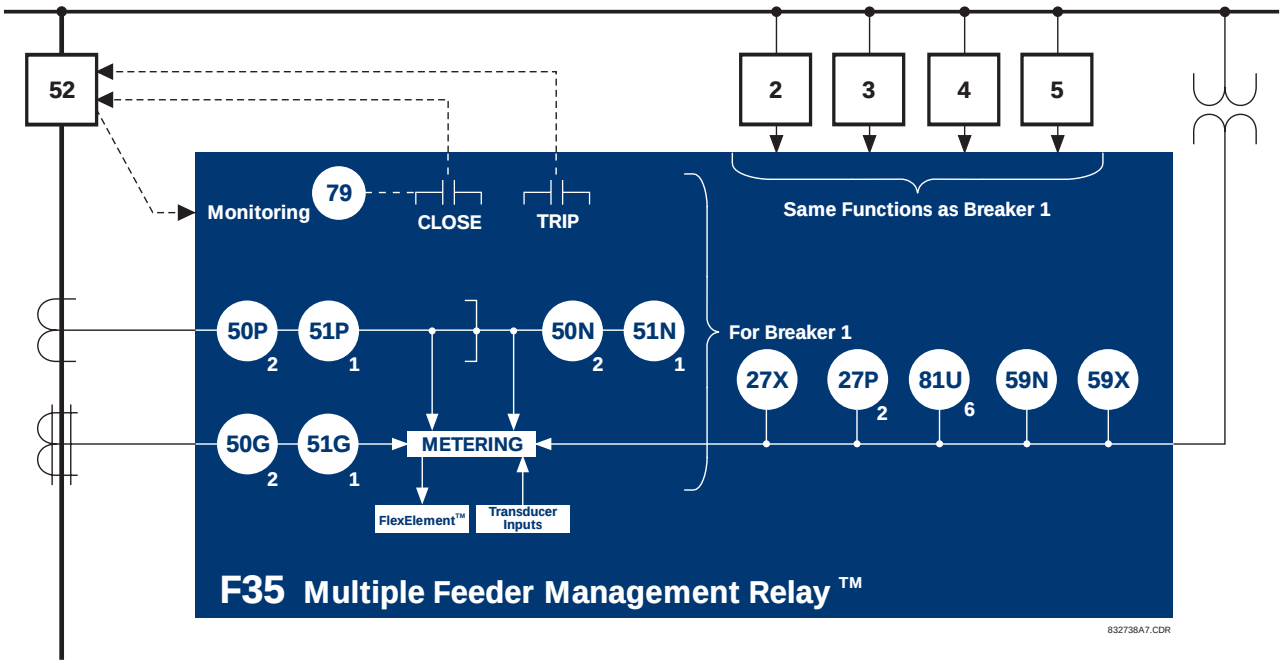

Figure 2–1: SINGLE LINE DIAGRAM

Table 2–1: ANSI DEVICE NUMBERS AND FUNCTIONS

DEVICE NUMBER	FUNCTION
27P	Phase Undervoltage
27X	Auxiliary Undervoltage
50G (up to 12)	Ground Instantaneous Overcurrent
50N (up to 12)	Neutral Instantaneous Overcurrent
50P (up to 12)	Phase Instantaneous Overcurrent
51G (up to 6)	Ground Time Overcurrent
51N (up to 6)	Neutral Time Overcurrent
51P (up to 6)	Phase Time Overcurrent
52	AC Circuit Breaker
59N	Neutral Overvoltage
59X	Auxiliary Overvoltage
79 (up to 6)	Automatic Recloser
81 (up to 6)	Underfrequency

Table 2–2: OTHER DEVICE FUNCTIONS

FUNCTION
Contact Inputs (up to 96)
Contact Outputs (up to 64)
Data Logger
Demand
Digital Elements (16)
DNP 3.0
Event Recorder
FlexElements™ (8)
FlexLogic™ Equations
Metering: Current, Voltage, Power, Energy, Frequency
MMS/UCA Communications
MMS/UCA Remote I/O (“GOOSE”)
ModBus Communications
ModBus User Map
Oscillography
Setting Groups (8)
Transducer I/O
User Programmable LEDs
User Definable Displays
Virtual Inputs (32)
Virtual Outputs (64)

2.1.2 ORDERING

The relay is available as a 19-inch rack horizontal mount unit or as a reduced size (¾) vertical mount unit, and consists of five UR module functions: Power Supply, CPU, CT/VT DSP, Digital Input/Output, and Transducer I/O. Each of these modules can be supplied in a number of configurations which must be specified at the time of ordering. The information required to completely specify the relay is provided in the following table (full details of available modules are contained in the HARDWARE chapter).

Table 2–3: ORDER CODES

	F35 - * 00 - H C * - F ** - H ** - M ** - P ** - U ** - W **											For Full Sized Horizontal Mount
	F35 - * 00 - V F * - F ** - H ** - M ** - P **											For Reduced Size Vertical Mount
BASE UNIT	F35	|	|	|	|	|	|	|	|	|	|	Base Unit
CPU		A	|	|	|	|	|	|	|	|	|	RS485 + RS485 (ModBus RTU, DNP)
		C	|	|	|	|	|	|	|	|	|	RS485 + 10BaseF (MMS/UCA2, ModBus TCP/IP, DNP)
		D	|	|	|	|	|	|	|	|	|	RS485 + Redundant 10BaseF (MMS/UCA2, ModBus TCP/IP, DNP)
SOFTWARE OPTIONS			00	|	|	|	|	|	|	|	|	|	No Software Options
MOUNT / FACEPLATE				H C	|	|	|	|	|	|	|	Horizontal (19" rack)
				V F	|	|	|	|	|	|	|	Vertical (3/4 size)
POWER SUPPLY					H	|	|	|	|	|	|	125 / 250 V AC/DC
					L	|	|	|	|	|	|	24 to 48 V (DC only)
CT/VT DSP						8A	|	8A	|	8A	|	Standard 4CT/4VT
						8B	|	8B	|	8B	|	Sensitive Ground 4CT/4VT
						8C	|	8C	|	8C	|	Standard 8CT
						8D	|	8D	|	8D	|	Sensitive Ground 8CT
DIGITAL I/O							|	XX	XX	XX	XX	No Module
							6A	6A	6A	6A	6A	2 Form-A (Voltage w/ opt Current) & 2 Form-C Outputs, 8 Digital Inputs
							6B	6B	6B	6B	6B	2 Form-A (Voltage w/ opt Current) & 4 Form-C Outputs, 4 Digital Inputs
							6C	6C	6C	6C	6C	8 Form-C Outputs
							6D	6D	6D	6D	6D	16 Digital Inputs
							6E	6E	6E	6E	6E	4 Form-C Outputs, 8 Digital Inputs
							6F	6F	6F	6F	6F	8 Fast Form-C Outputs
							6G	6G	6G	6G	6G	4 Form-A (Voltage w/ opt Current) Outputs, 8 Digital Inputs
							6H	6H	6H	6H	6H	6 Form-A (Voltage w/ opt Current) Outputs, 4 Digital Inputs
							6K	6K	6K	6K	6K	4 Form-C & 4 Fast Form-C Outputs
							6L	6L	6L	6L	6L	2 Form-A (Current w/ opt Voltage) & 2 Form-C Outputs, 8 Digital Inputs
							6M	6M	6M	6M	6M	2 Form-A (Current w/ opt Voltage) & 4 Form-C Outputs, 4 Digital Inputs
							6N	6N	6N	6N	6N	4 Form-A (Current w/ opt Voltage) Outputs, 8 Digital Inputs
							6P	6P	6P	6P	6P	6 Form-A (Current w/ opt Voltage) Outputs, 4 Digital Inputs
							6R	6R	6R	6R	6R	2 Form-A (No Monitoring) & 2 Form-C Outputs, 8 Digital Inputs
							6S	6S	6S	6S	6S	2 Form-A (No Monitoring) & 4 Form-C Outputs, 4 Digital Inputs
							6T	6T	6T	6T	6T	4 Form-A (No Monitoring) Outputs, 8 Digital Inputs
							6U	6U	6U	6U	6U	6 Form-A (No Monitoring) Outputs, 4 Digital Inputs
TRANSDUCER I/O (MAXIMUM OF 4 PER UNIT)							5C	5C	5C	5C	5C	8 RTD Inputs
							5E	5E	5E	5E	5E	4 dcmA Inputs, 4 RTD Inputs
							5F	5F	5F	5F	5F	8 dcmA Inputs

The order codes for replacement modules to be ordered separately are shown in the following table. **When ordering a replacement CPU module or Faceplate, please provide the serial number of your existing unit.**

Table 2–4: ORDER CODES FOR REPLACEMENT MODULES

	UR - ** -	
POWER SUPPLY	1H	125 / 250 V AC/DC
	1L	24 - 48 V (DC only)
CPU	9A	RS485 + RS485 (ModBus RTU, DNP 3.0)
	9C	RS485 + 10BaseF (MMS/UCA2, ModBus TCP/IP, DNP 3.0)
	9D	RS485 + Redundant 10BaseF (MMS/UCA2, ModBus TCP/IP, DNP 3.0)
FACEPLATE	3C	Horizontal Faceplate with Display & Keypad
	3F	Vertical Faceplate with Display & Keypad
DIGITAL I/O	6A	2 Form-A (Voltage w/ opt Current) & 2 Form-C Outputs, 8 Digital Inputs
	6B	2 Form-A (Voltage w/ opt Current) & 4 Form-C Outputs, 4 Digital Inputs
	6C	8 Form-C Outputs
	6D	16 Digital Inputs
	6E	4 Form-C Outputs, 8 Digital Inputs
	6F	8 Fast Form-C Outputs
	6G	4 Form-A (Voltage w/ opt Current) Outputs, 8 Digital Inputs
	6H	6 Form-A (Voltage w/ opt Current) Outputs, 4 Digital Inputs
	6K	4 Form-C & 4 Fast Form-C Outputs
	6L	2 Form-A (Current w/ opt Voltage) & 2 Form-C Outputs, 8 Digital Inputs
	6M	2 Form-A (Current w/ opt Voltage) & 4 Form-C Outputs, 4 Digital Inputs
	6N	4 Form-A (Current w/ opt Voltage) Outputs, 8 Digital Inputs
	6P	6 Form-A (Current w/ opt Voltage) Outputs, 4 Digital Inputs
	6R	2 Form-A (No Monitoring) & 2 Form-C Outputs, 8 Digital Inputs
	6S	2 Form-A (No Monitoring) & 4 Form-C Outputs, 4 Digital Inputs
	6T	4 Form-A (No Monitoring) Outputs, 8 Digital Inputs
	6U	6 Form-A (No Monitoring) Outputs, 4 Digital Inputs
CT/VT DSP	8A	Standard 4CT/4VT
	8B	Sensitive Ground 4CT/4VT
	8C	Standard 8CT
	8D	Sensitive Ground 8CT
	8Z	HI-Z 4CT
L60 INTER-RELAY COMMUNICATIONS	7U	110/125 V, 20 mA Input/Output Channel Interface
	7V	48/60 V, 20 mA Input/Output Channel Interface
	7Y	125 V Input, 5V Output, 20 mA Channel Interface
	7Z	5 V Input, 5V Output, 20 mA Channel Interface
L90 INTER-RELAY COMMUNICATIONS	7A	820 nm, multi-mode, LED, 1 Channel
	7B	1300 nm, multi-mode, LED, 1 Channel
	7C	1300 nm, single-mode, ELED, 1 Channel
	7D	1300 nm, single-mode, LASER, 1 Channel
	7E	Channel 1: G.703; Channel 2: 820 nm, multi-mode LED
	7F	Channel 1: G.703; Channel 2: 1300 nm, multi-mode LED
	7G	Channel 1: G.703; Channel 2: 1300 nm, single-mode ELED
	7Q	Channel 1: G.703; Channel 2: 820 nm, single-mode LASER
	7H	820 nm, multi-mode, LED, 2 Channels
	7I	1300 nm, multi-mode, LED, 2 Channels
	7J	1300 nm, single-mode, ELED, 2 Channels
	7K	1300 nm, single-mode, LASER, 2 Channels
	7L	Channel 1 - RS422; Channel 2 - 820 nm, multi-mode, LED
	7M	Channel 1 - RS422; Channel 2 - 1300 nm, multi-mode, LED
	7N	Channel 1 - RS422; Channel 2 - 1300 nm, single-mode, ELED
	7P	Channel 1 - RS422; Channel 2 - 1300 nm, single-mode, LASER
	7R	G.703, 1 Channel
	7S	G.703, 2 Channels
	7T	RS422, 1 Channel
	7W	RS422, 2 Channels
	72	1550 nm, single-mode, LASER, 1 Channel
	73	1550 nm, single-mode, LASER, 2 Channel
	74	Channel 1 - RS422; Channel 2 - 1550 nm, single-mode, LASER
	75	Channel 1 - G.703, Channel 2 - 1550 nm, single -mode, LASER
TRANSDUCER I/O	5C	8 RTD Inputs
	5E	4 dcmA Inputs, 4 RTD Inputs
	5F	8 dcmA Inputs

SPECIFICATIONS ARE SUBJECT TO CHANGE WITHOUT NOTICE

2.2.1 PROTECTION ELEMENTS

NOTE The operating times below include the activation time of a trip rated Form-A output contact unless otherwise indicated. FlexLogic™ operands of a given element are 4 ms faster. This should be taken into account when using FlexLogic™ to interconnect with other protection or control elements of the relay, building FlexLogic™ equations, or interfacing with other IEDs or power system devices via communications or different output contacts.

PHASE/NEUTRAL/GROUND TOC

Current:	Phasor or RMS
Pickup Level:	0.000 to 30.000 pu in steps of 0.001
Dropout Level:	97% to 98% of Pickup
Level Accuracy:	
for 0.1 to 2.0 × CT:	±0.5% of reading or ±1% of rated (whichever is greater)
for > 2.0 × CT:	±1.5% of reading > 2.0 × CT rating
Curve Shapes:	IEEE Moderately/Very/Extremely Inverse; IEC (and BS) A/B/C and Short Inverse; GE IAC Inverse, Short/Very/Extremely Inverse; I^2t; FlexCurve™ (programmable); Definite Time (0.01 s base curve)
Curve Multiplier:	Time Dial = 0.00 to 600.00 in steps of 0.01
Reset Type:	Instantaneous/Timed (per IEEE)
Timing Accuracy:	Operate at > 1.03 × Actual Pickup ±3.5% of operate time or ±½ cycle (whichever is greater)

PHASE/NEUTRAL/GROUND IOC

Pickup Level:	0.000 to 30.000 pu in steps of 0.001
Dropout Level:	97 to 98% of Pickup
Level Accuracy:	
0.1 to 2.0 × CT rating:	±0.5% of reading or ±1% of rated (whichever is greater)
> 2.0 × CT rating	±1.5% of reading
Overreach:	<2%
Pickup Delay:	0.00 to 600.00 s in steps of 0.01
Reset Delay:	0.00 to 600.00 s in steps of 0.01
Operate Time:	<20 ms at 3 × Pickup at 60 Hz
Timing Accuracy:	Operate at 1.5 × Pickup ±3% or ±4 ms (whichever is greater)

PHASE UNDERVOLTAGE

Pickup Level:	0.000 to 3.000 pu in steps of 0.001
Dropout Level:	102 to 103% of Pickup
Level Accuracy:	±0.5% of reading from 10 to 208 V
Curve Shapes:	GE IAV Inverse; Definite Time (0.1s base curve)
Curve Multiplier:	Time Dial = 0.00 to 600.00 in steps of 0.01
Timing Accuracy:	Operate at < 0.90 × Pickup ±3.5% of operate time or ±4 ms (whichever is greater)

AUXILIARY UNDERVOLTAGE

Pickup Level:	0.000 to 3.000 pu in steps of 0.001
Dropout Level:	102 to 103% of Pickup
Level Accuracy:	±0.5% of reading from 10 to 208 V
Curve Shapes:	GE IAV Inverse Definite Time
Curve Multiplier:	Time Dial = 0 to 600.00 in steps of 0.01
Timing Accuracy:	±3% of operate time or ±4 ms (whichever is greater)

NEUTRAL OVERVOLTAGE

Pickup Level:	0.000 to 1.250 pu in steps of 0.001
Dropout Level:	97 to 98% of Pickup
Level Accuracy:	±0.5% of reading from 10 to 208 V
Pickup Delay:	0.00 to 600.00 s in steps of 0.01
Reset Delay:	0.00 to 600.00 s in steps of 0.01
Timing Accuracy:	±3% or ±4 ms (whichever is greater)
Operate Time:	< 30 ms at 1.10 × Pickup at 60 Hz

AUXILIARY OVERVOLTAGE

Pickup Level:	0.000 to 3.000 pu in steps of 0.001
Dropout Level:	97 to 98% of Pickup
Level Accuracy:	±0.5% of reading from 10 to 208 V
Pickup Delay:	0 to 600.00 s in steps of 0.01
Reset Delay:	0 to 600.00 s in steps of 0.01
Timing Accuracy:	±3% of operate time or ±4 ms (whichever is greater)
Operate Time:	< 30 ms at 1.10 × pickup at 60 Hz

UNDERFREQUENCY

Minimum Signal:	0.10 to 1.25 pu in steps of 0.01
Pickup Level:	20.00 to 65.00 Hz in steps of 0.01
Dropout Level:	Pickup + 0.03 Hz
Level Accuracy:	±0.01 Hz
Time Delay:	0 to 65.535 s in steps of 0.001
Timer Accuracy:	±3% or 4 ms, whichever is greater

AUTORECLOSURE

Single breaker applications, 3-pole tripping schemes.

Up to 4 reclose attempts before lockout.

Independent dead time setting before each shot.

Possibility of changing protection settings after each shot with FlexLogic™.

2.2.2 USER-PROGRAMMABLE ELEMENTS

FLEXLOGIC™

Programming language:	Reverse Polish Notation with graphical visualization (keypad programmable)
Lines of code:	512
Number of Internal Variables:	64
Supported operations:	NOT, XOR, OR (2 to 16 inputs), AND (2 to 16 inputs), NOR (2 to 16 inputs), NAND (2 to 16 inputs), LATCH (Reset dominant), EDGE DETECTORS, TIMERS
Inputs:	any logical variable, contact, or virtual input
Number of timers:	32
Pickup delay:	0 to 60000 (ms, sec., min.) in steps of 1
Dropout delay:	0 to 60000 (ms, sec., min.) in steps of 1

FLEXCURVES™

Number:	2 (A and B)
Number of reset points:	40 (0 through 1 of pickup)
Number of operate points:	80 (1 through 20 of pickup)
Time delay:	0 to 65535 ms in steps of 1

FLEXELEMENTS™

Number of elements:	8
Operating signal:	any analog actual value, or two values in differential mode
Operating signal mode:	Signed or Absolute Value
Operating mode:	Level, Delta
Compensation direction:	Over, Under
Pickup Level:	–30.000 to 30.000 pu in steps of 0.001
Hysteresis:	0.1 to 50.0% in steps of 0.1
Delta dt:	20 ms to 60 days
Pickup and dropout delay:	0.000 to 65.535 in steps of 0.001

FLEX STATES

Number:	up to 256 logical variables grouped under 16 Modbus addresses
Programmability:	any logical variable, contact, or virtual input

USER-PROGRAMMABLE LEDS

Number:	48 plus Trip and Alarm
Programmability:	from any logical variable, contact, or virtual input
Reset mode:	Self-reset or Latched

USER-DEFINABLE DISPLAYS

Number of displays:	8
Lines of display:	2 × 20 alphanumeric characters
Parameters	up to 5, any Modbus register addresses

2.2.3 MONITORING

OSCILLOGRAPHY

Max. No. of Records:	64
Sampling Rate:	64 samples per power cycle
Triggers:	Any element pickup, dropout or operate Digital input change of state Digital output change of state FlexLogic™ equation
Data:	AC input channels Element state Digital input state Digital output state
Data Storage:	In non-volatile memory

EVENT RECORDER

Capacity:	1024 events
Time-tag:	to 1 microsecond
Triggers:	Any element pickup, dropout or operate Digital input change of state Digital output change of state Self-test events
Data Storage:	In non-volatile memory

DATA LOGGER

Number of Channels:	1 to 16
Parameters:	Any available analog Actual Value
Sampling Rate:	1 sec.; 1, 5, 10, 15, 20, 30, 60 min.
Storage Capacity:	(NN is dependent on memory)
1-second rate:	01 channel for NN days 16 channels for NN days
↓	↓
60-minute rate:	01 channel for NN days 16 channels for NN days

2.2.4 METERING

RMS CURRENT: PHASE, NEUTRAL, AND GROUND

Accuracy at

0.1 to 2.0 × CT rating:	±0.25% of reading or ±0.1% of rated (whichever is greater)
> 2.0 × CT rating:	±1.0% of reading

RMS VOLTAGE

Accuracy:	±0.5% of reading from 10 to 208 V

APPARENT POWER VA

Accuracy:	±1.0% of reading

REAL POWER WATT

Accuracy:	±1.0% of reading at –0.8 < PF ≤ –1.0 and 0.8 < PF ≤ 1.0

REACTIVE POWER VAR

Accuracy:	±1.0% of reading –0.2 ≤ PF ≤ 0.2

WATT-HOURS (POSITIVE & NEGATIVE)

Accuracy:	±2.0% of reading
Range:	±0 to 2×10^9 MWh
Parameters:	3-phase only
Update Rate:	50 ms

VAR-HOURS (POSITIVE & NEGATIVE)

Accuracy:	±2.0% of reading
Range:	±0 to 2×10^9 Mvarh
Parameters:	3-phase only
Update Rate:	50 ms

DEMAND

Measurements:	Phases A, B, and C present and maximum measured currents 3-Phase Power (P, Q, and S) present and maximum measured currents
Accuracy:	±2.0%

FREQUENCY

Accuracy at

V = 0.8 to 1.2 pu:	±0.01 Hz (when voltage signal is used for frequency measurement)
I = 0.1 to 0.25 pu:	±0.05 Hz
I > 0.25 pu	±0.02 Hz (when current signal is used for frequency measurement)

2.2.5 INPUTS

AC CURRENT

CT Rated Primary:	1 to 50000 A
CT Rated Secondary:	1 A or 5 A by connection
Nominal Frequency:	20 to 65 Hz
Relay Burden:	< 0.2 VA at rated secondary
Conversion Range:	
Standard CT Module:	0.02 to 46 × CT rating RMS symmetrical
Sensitive Ground Module:	0.002 to 4.6 × CT rating RMS symmetrical
Current Withstand:	20 ms at 250 times rated 1 sec. at 100 times rated Cont. at 3 times rated

AC VOLTAGE

VT Rated Secondary:	50.0 to 240.0 V
VT Ratio:	0.1 to 24000.0
Nominal Frequency:	20 to 65 Hz
Relay Burden:	< 0.25 VA at 120 V
Conversion Range:	1 to 275 V
Voltage Withstand:	cont. at 260 V to neutral 1 min./hr at 420 V to neutral

CONTACT INPUTS

Dry Contacts:	1000 Ω maximum
Wet Contacts:	300 V DC maximum
Selectable Thresholds:	16 V, 30 V, 80 V, 140 V
Recognition Time:	< 1 ms
Debounce Timer:	0.0 to 16.0 ms in steps of 0.5

IRIG-B INPUT

Amplitude Modulation:	1 to 10 V pk-pk
DC Shift:	TTL
Input Impedance:	22 kΩ

DCMA INPUTS

Current Input (mA DC):	0 to –1, 0 to +1, –1 to +1, 0 to 5, 0 to 10, 0 to 20, 4 to 20 (programmable)
Input Impedance:	379 Ω ±10%
Conversion Range:	–1 to + 20 mA DC
Accuracy:	±0.2% of full scale
Type:	Passive

RTD INPUTS

Types (3-wire):	100 Ω Platinum, 100 & 120 Ω Nickel, 10 Ω Copper
Sensing Current:	5 mA
Range:	–50 to +250°C
Accuracy:	±2°C
Isolation:	36 V pk-pk

2.2.6 POWER SUPPLY

LOW RANGE

Nominal DC Voltage: 24 to 48 V at 3 A
Min./Max. DC Voltage: 20 / 60 V
NOTE: Low range is DC only.

HIGH RANGE

Nominal DC Voltage: 125 to 250 V at 0.7 A
Min./Max. DC Voltage: 88 / 300 V
Nominal AC Voltage: 100 to 240 V at 50/60 Hz, 0.7 A
Min./Max. AC Voltage: 88 / 265 V at 48 to 62 Hz

ALL RANGES

Volt Withstand: 2 × Highest Nominal Voltage for 10 ms
Voltage Loss Hold-Up: 50 ms duration at nominal
Power Consumption: Typical = 35 VA; Max. = 75 VA

INTERNAL FUSE

RATINGS

Low Range Power Supply: 7.5 A / 600 V
High Range Power Supply: 5 A / 600 V

INTERRUPTING CAPACITY

AC: 100 000 A RMS symmetrical
DC: 10 000 A

2.2.7 OUTPUTS

FORM-A RELAY

Make and Carry for 0.2 sec.: 30 A as per ANSI C37.90
Carry Continuous: 6 A
Break at L/R of 40 ms: 0.25 A DC max.
Operate Time: < 4 ms
Contact Material: Silver alloy

FORM-A VOLTAGE MONITOR

Applicable Voltage: approx. 15 to 250 V DC
Trickle Current: approx. 1 to 2.5 mA

FORM-A CURRENT MONITOR

Threshold Current: approx. 80 to 100 mA

CONTROL POWER EXTERNAL OUTPUT (FOR DRY CONTACT INPUT)

Capacity: 100 mA DC at 48 V DC
Isolation: ±300 Vpk

2.2.8 COMMUNICATIONS

RS232

Front Port: 19.2 kbps, Modbus® RTU

RS485

1 or 2 Rear Ports: Up to 115 kbps, Modbus® RTU, isolated together at 36 Vpk
Typical Distance: 1200 m

ETHERNET PORT

10BaseF: 820 nm, multi-mode, supports half-duplex/full-duplex fiber optic with ST connector
Redundant 10BaseF: 820 nm, multi-mode, half-duplex/full-duplex fiber optic with ST connector
Power Budget: 10 db
Max Optical Ip Power: –7.6 dBm
Typical Distance: 1.65 km

2.2.9 ENVIRONMENTAL

Operating Temperatures:
Cold: IEC 60028-2-1, 16 h at –40°C
Dry Heat: IEC 60028-2-2, 16 h at 85°C

Humidity (noncondensing): IEC 60068-2-30, 95%, Variant 1, 6 days
Altitude: Up to 2000 m
Installation Category: II

2.2.10 TYPE TESTS

Electrical Fast Transient: ANSI/IEEE C37.90.1
IEC 61000-4-4
IEC 60255-22-4

Oscillatory Transient: ANSI/IEEE C37.90.1
IEC 61000-4-12

Insulation Resistance: IEC 60255-5

Dielectric Strength: IEC 60255-6
ANSI/IEEE C37.90

Electrostatic Discharge: EN 61000-4-2

Surge Immunity: EN 61000-4-5

RFI Susceptibility: ANSI/IEEE C37.90.2
IEC 61000-4-3
IEC 60255-22-3
Ontario Hydro C-5047-77

Conducted RFI: IEC 61000-4-6

Voltage Dips/Interruptions/Variations:
IEC 61000-4-11
IEC 60255-11

Power Frequency Magnetic Field Immunity:
IEC 61000-4-8

Vibration Test (sinusoidal): IEC 60255-21-1

Shock and Bump: IEC 60255-21-2

NOTE **Type test report available upon request.**

2.2.11 PRODUCTION TESTS

THERMAL

Products go through a 12 h burn-in process at 60°C

2.2.12 APPROVALS

APPROVALS

UL approval pending

CSA approval pending

Manufactured under an ISO9000 Registered system.

CE:

LVD 73/23/EEC: IEC 1010-1

EMC 81/336/EEC: EN 50081-2
EN 50082-2

2.2.13 MAINTENANCE

Cleaning: Normally, cleaning is not required; but for situations where dust has accumulated on the faceplate display, a dry cloth can be used.

3.1.1 PANEL CUTOUT

The relay is available as a 19-inch rack horizontal mount unit or as a reduced size (¾) vertical mount unit, with a removable faceplate. The modular design allows the relay to be easily upgraded or repaired by a qualified service person. The faceplate is hinged to allow easy access to the removable modules, and is itself removable to allow mounting on doors with limited rear depth. There is also a removable dust cover that fits over the faceplate, which must be removed when attempting to access the keypad or RS232 communications port.

The vertical and horizontal case dimensions are shown below, along with panel cutout details for panel mounting. When planning the location of your panel cutout, ensure that provision is made for the faceplate to swing open without interference to or from adjacent equipment.

The relay must be mounted such that the faceplate sits semi-flush with the panel or switchgear door, allowing the operator access to the keypad and the RS232 communications port. The relay is secured to the panel with the use of four screws supplied with the relay.

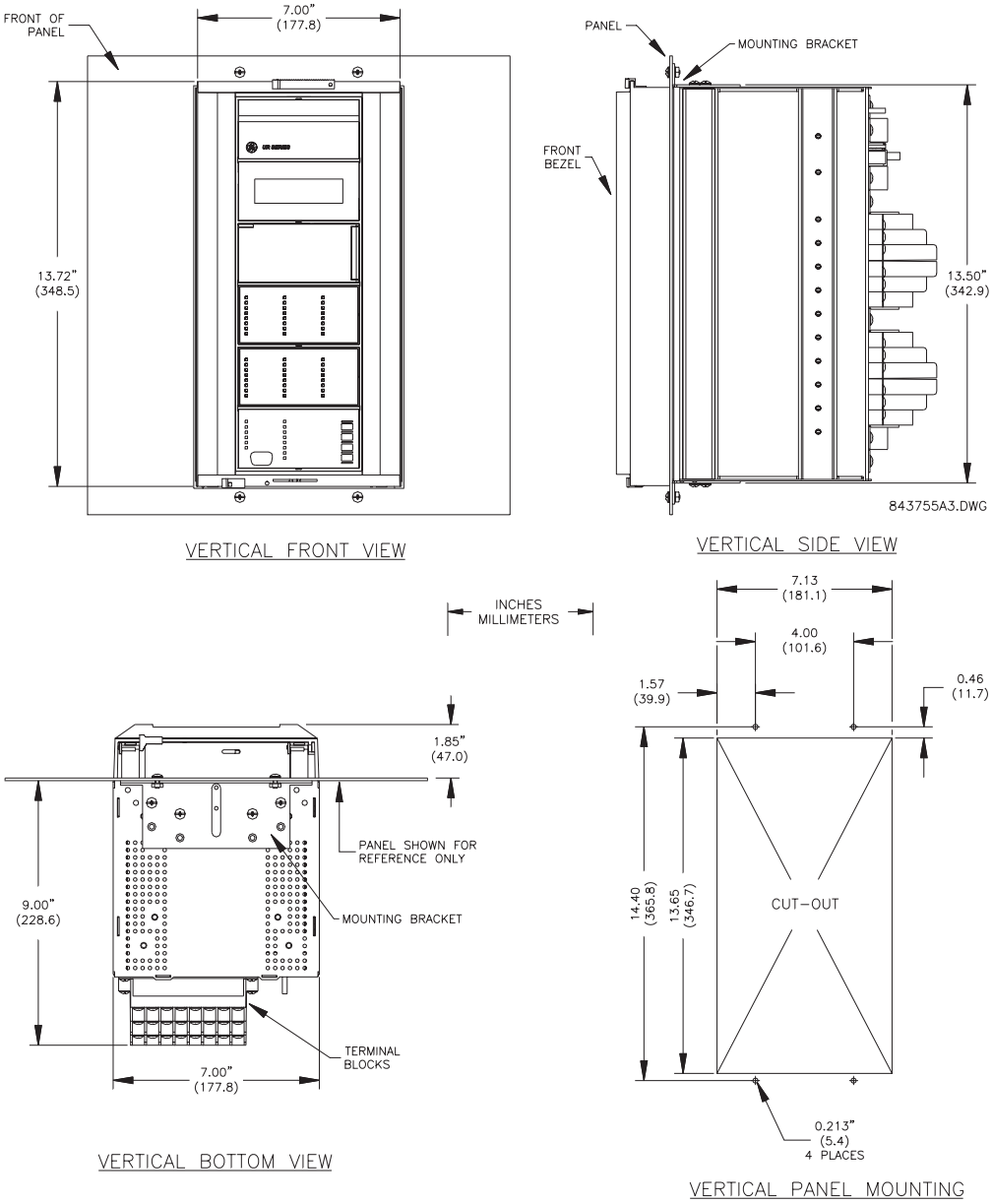

Figure 3–1: F35 VERTICAL MOUNTING AND DIMENSIONS

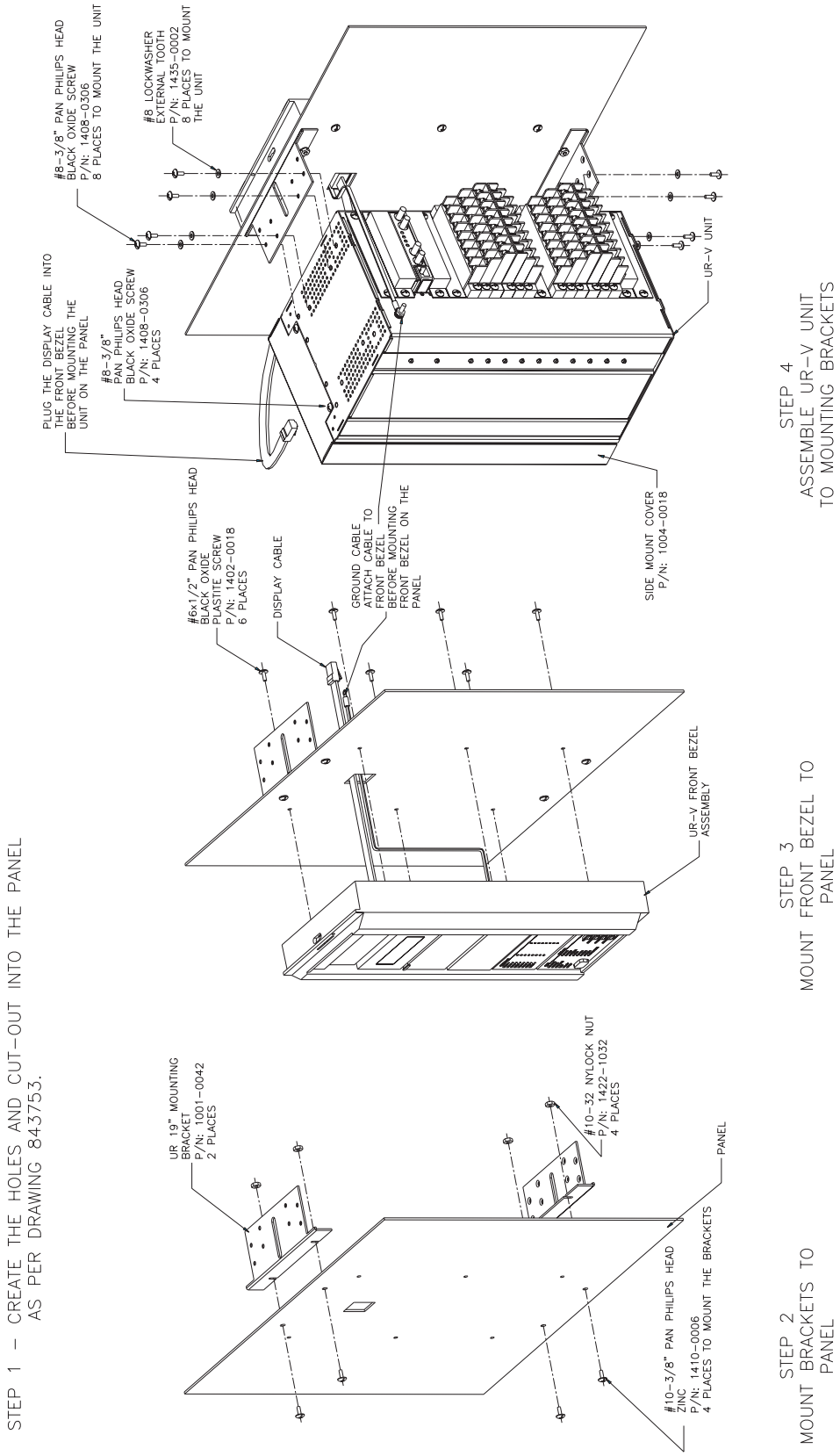

Figure 3–2: F35 VERTICAL SIDE MOUNTING INSTALLATION

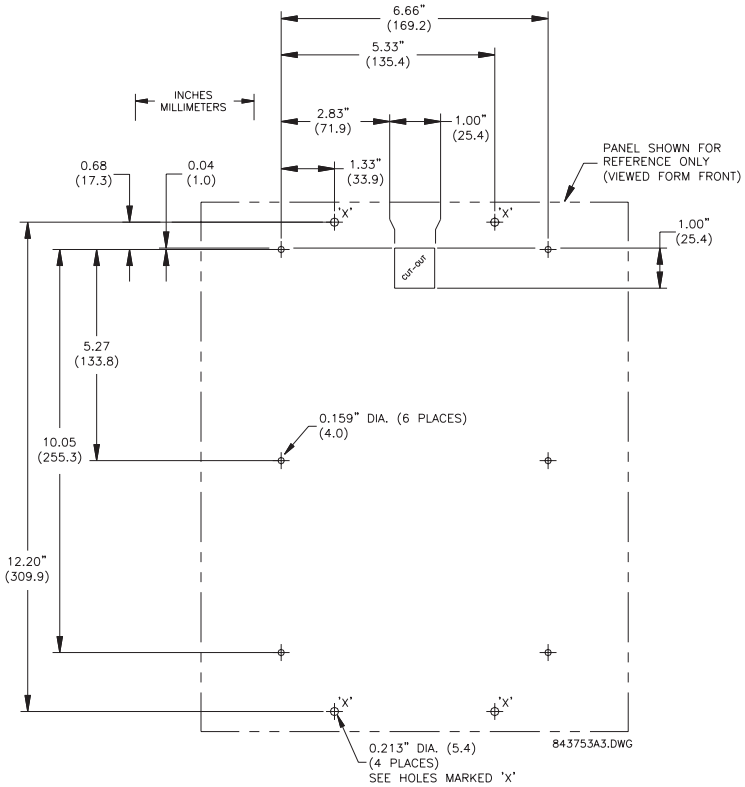

Figure 3–3: F35 VERTICAL SIDE MOUNTING REAR DIMENSIONS

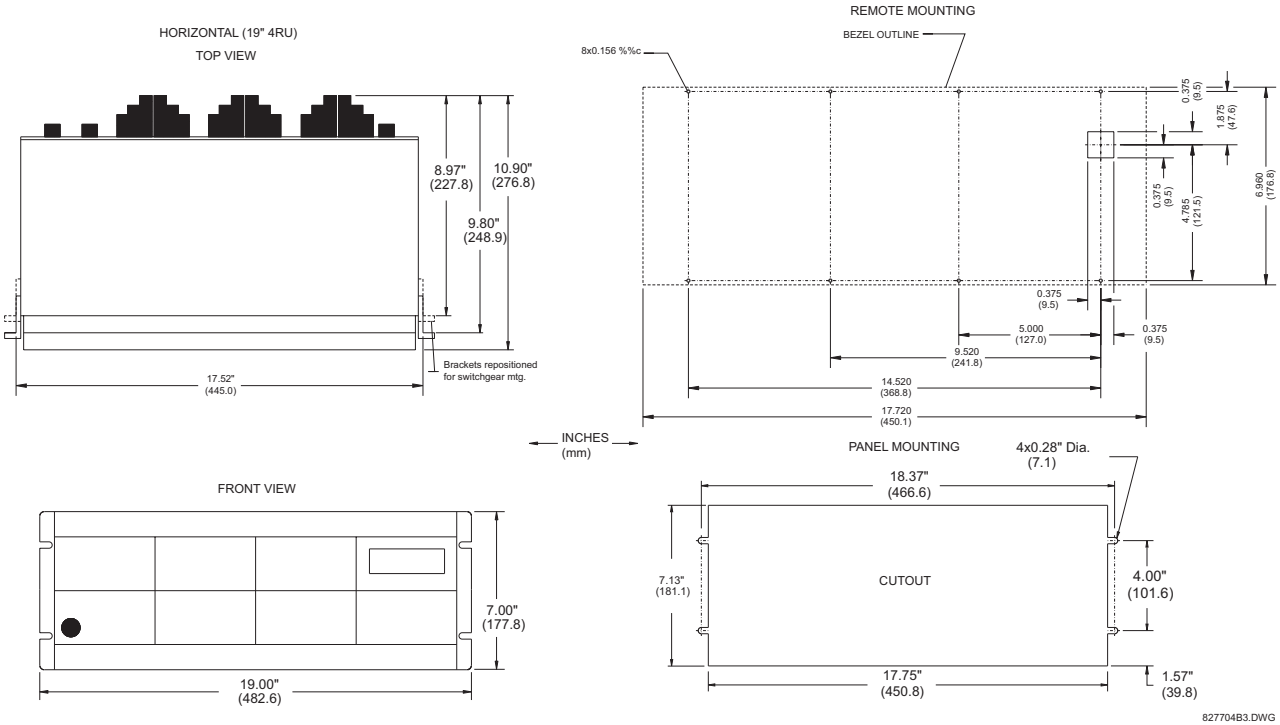

Figure 3–4: F35 HORIZONTAL MOUNTING AND DIMENSIONS

3.1.2 MODULE WITHDRAWAL/INSERTION

WARNING **Module withdrawal and insertion may only be performed when control power has been removed from the unit. Inserting an incorrect module type into a slot may result in personal injury, damage to the unit or connected equipment, or undesired operation!**

WARNING **Proper electrostatic discharge protection (i.e. a static strap) must be used when coming in contact with modules while the relay is energized!**

The relay, being modular in design, allows for the withdrawal and insertion of modules. Modules must only be replaced with like modules in their original factory configured slots.

The faceplate can be opened to the left, once the sliding latch on the right side has been pushed up, as shown in the figure below. This allows for easy accessibility of the modules for withdrawal.

Figure 3–5: UR MODULE WITHDRAWAL/INSERTION

WITHDRAWAL: The ejector/inserter clips, located at the top and bottom of each module, must be pulled simultaneously to release the module for removal. Before performing this action, **control power must be removed from the relay**. Record the original location of the module to ensure that the same or replacement module is inserted into the correct slot.

INSERTION: Ensure that the **correct** module type is inserted into the **correct** slot position. The ejector/inserter clips located at the top and at the bottom of each module must be in the disengaged position as the module is smoothly inserted into the slot. Once the clips have cleared the raised edge of the chassis, engage the clips simultaneously. When the clips have locked into position, the module will be fully inserted.

NOTE Type 9C and 9D CPU modules are equipped with 10BaseT and 10BaseF Ethernet connectors for communications. These connectors must be individually disconnected from the module before the it can be removed from the chassis.

3.1.3 REAR TERMINAL LAYOUT

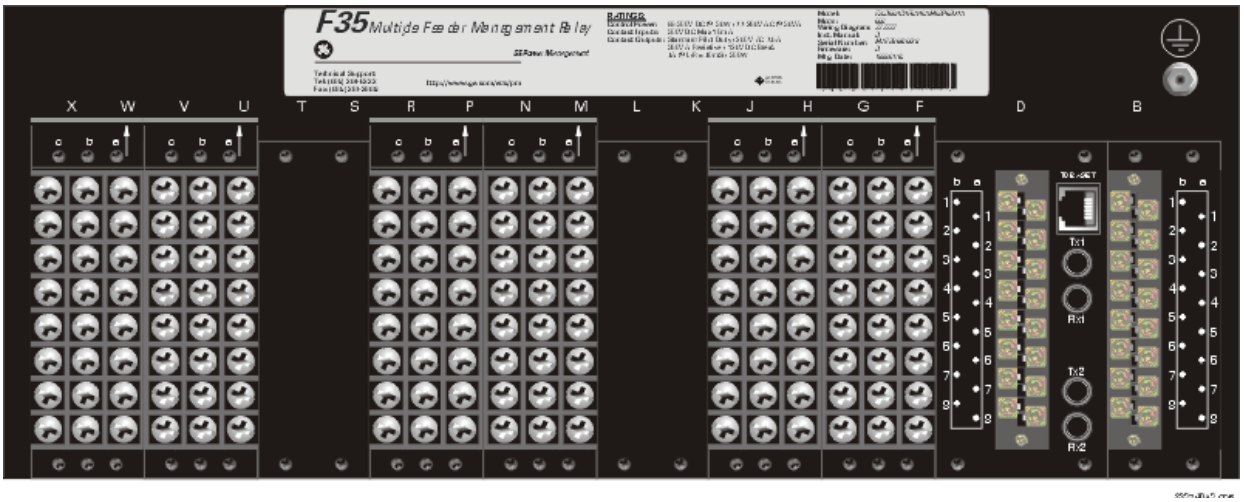

Figure 3–6: REAR TERMINAL VIEW

WARNING

Do not touch any rear terminals while the relay is energized!

3.1.4 REAR TERMINAL ASSIGNMENTS

The relay follows a convention with respect to terminal number assignments which are three characters long assigned in order by module slot position, row number, and column letter. Two-slot wide modules take their slot designation from the first slot position (nearest to CPU module) which is indicated by an arrow marker on the terminal block. See the following figure for an example of rear terminal assignments.

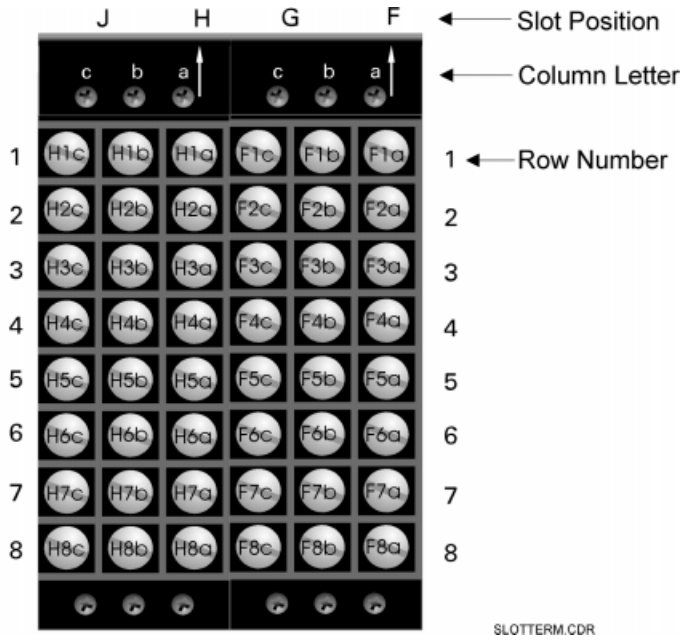

Figure 3–7: EXAMPLE OF MODULES IN F & H SLOTS

3.2.1 TYPICAL WIRING DIAGRAM

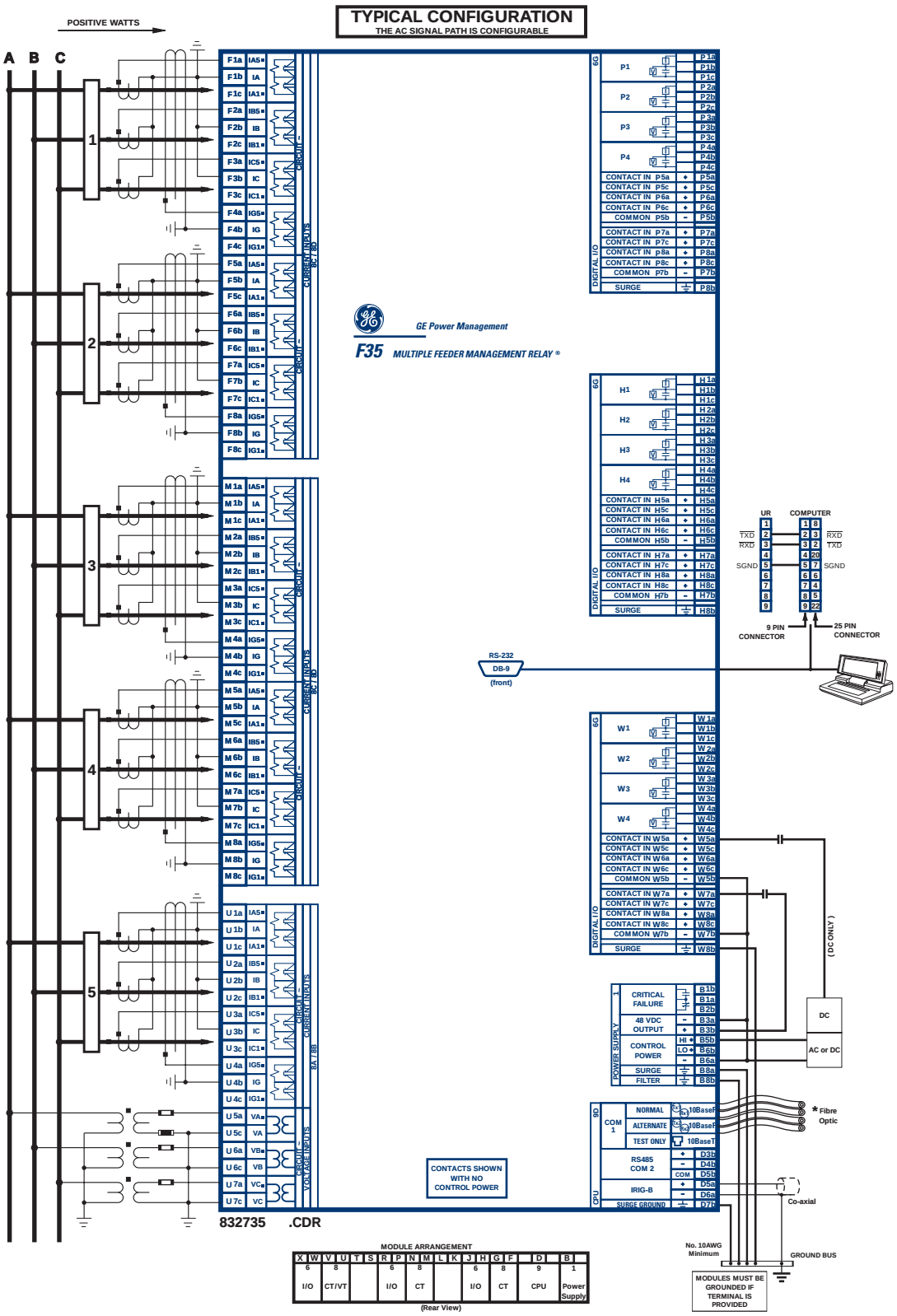

This diagram is based on the following order code: F35-D00-HCH-F8C-H6G-M8C-P6G-U8A-W6G.

The purpose of this diagram is to provide an example of how the relay is typically wired, not specifically how to wire your own relay. Please refer to the following pages for examples to help you wire your relay correctly based on your own relay configuration and order code.

CAUTION

Figure 3–8: TYPICAL WIRING DIAGRAM

3.2.2 DIELECTRIC STRENGTH RATINGS AND TESTING

a) RATINGS

The dielectric strength of UR module hardware is shown in the following table:

Table 3–1: DIELECTRIC STRENGTH OF UR MODULE HARDWARE

MODULE TYPE	MODULE FUNCTION	TERMINALS		DIELECTRIC STRENGTH (AC)
		FROM	TO	
1	Power Supply	High (+); Low (+); (–)	Chassis	2000 V AC for 1 min. (See Precaution 1)
1	Power Supply	48 V DC (+) and (–)	Chassis	2000 V AC for 1 min. (See Precaution 1)
1	Power Supply	Relay Terminals	Chassis	2000 V AC for 1 min. (See Precaution 1)
2	Reserved for Future	N/A	N/A	N/A
3	Reserved for Future	N/A	N/A	N/A
4	Reserved for Future	N/A	N/A	N/A
5	Analog I/O	All except 8b	Chassis	< 50 V DC
6	Digital I/O	All (See Precaution 2)	Chassis	2000 V AC for 1 min.
8	CT/VT	All	Chassis	2000 V AC for 1 min.
9	CPU	All except 7b	Chassis	< 50 VDC

b) TESTING

Filter networks and transient protection clamps are used in module hardware to prevent damage caused by high peak voltage transients, radio frequency interference (RFI) and electromagnetic interference (EMI). These protective components **can be damaged** by application of the ANSI/IEEE C37.90 specified test voltage for a period longer than the specified one minute. For testing of dielectric strength where the test interval may exceed one minute, always observe the following precautions:

Test Precautions:

1. The connection from ground to the Filter Ground (Terminal 8b) and Surge Ground (Terminal 8a) must be removed before testing.
2. Some versions of the digital I/O module have a Surge Ground connection on Terminal 8b. On these module types, this connection must be removed before testing.

3.2.3 CONTROL POWER

CAUTION

CONTROL POWER SUPPLIED TO THE RELAY MUST BE CONNECTED TO THE MATCHING POWER SUPPLY RANGE OF THE RELAY. IF THE VOLTAGE IS APPLIED TO THE WRONG TERMINALS, DAMAGE MAY OCCUR!

The power supply module can be ordered with either of two possible voltage ranges. Each range has a dedicated input connection for proper operation. The ranges are as shown below (see the Technical Specifications section for details).

Table 3–2: CONTROL POWER VOLTAGE RANGE

RANGE	NOMINAL VOLTAGE
LO	24 to 48 V (DC only)
HI	125 to 250 V

The power supply module provides power to the relay and supplies power for dry contact input connections.

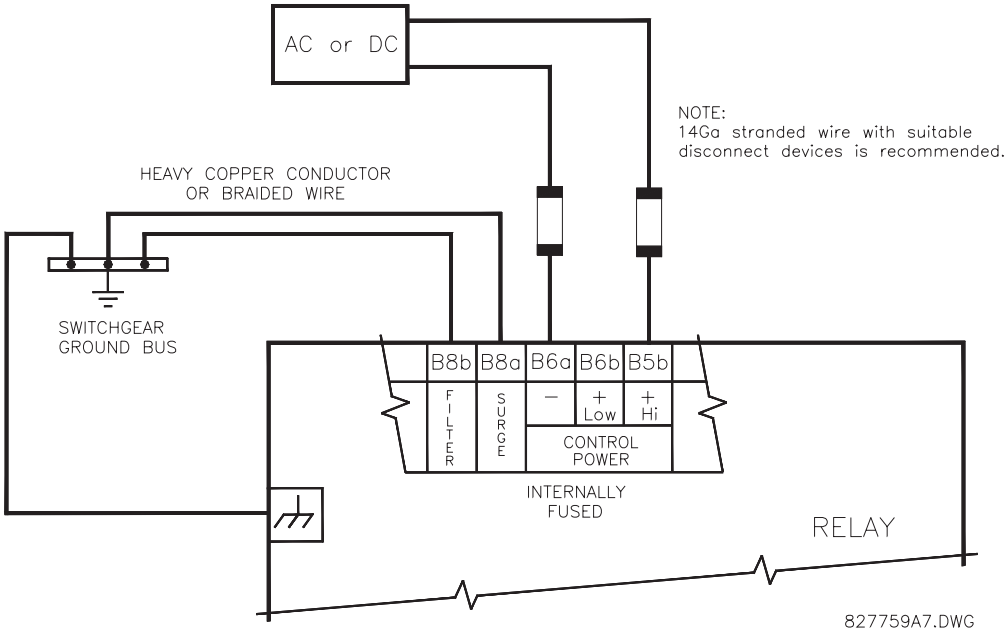

Figure 3–9: CONTROL POWER CONNECTION

The power supply module provides 48 V DC power for dry contact input connections and a critical failure relay (see TYPICAL WIRING DIAGRAM). The critical failure relay is a Form-C that will be energized once control power is applied and the relay has successfully booted up with no critical self-test failures. If any of the on-going self-test features detect a critical failure or control power is lost, the relay will de-energize.

3.2.4 CT/VT MODULES

A CT/VT module may have voltage inputs on channels 1 through 4 inclusive, or channels 5 through 8 inclusive. Channels 1 and 5 are intended for connection to phase A, and are labeled as such in the relay. Channels 2 and 6 are intended for connection to phase B, and are labeled as such in the relay. Channels 3 and 7 are intended for connection to phase C and are labeled as such in the relay. Channels 4 and 8 are intended for connection to a single phase source. If voltage, this channel is labelled the auxiliary voltage (VX). If current, this channel is intended for connection to a CT between a system neutral and ground, and is labelled the ground current (IG).

a) AC CURRENT TRANSFORMER INPUTS

CAUTION **VERIFY THAT THE CONNECTION MADE TO THE RELAY NOMINAL CURRENT OF 1 A OR 5 A MATCHES THE SECONDARY RATING OF THE CONNECTED CTs. UNMATCHED CTs MAY RESULT IN EQUIPMENT DAMAGE OR INADEQUATE PROTECTION.**

The CT/VT module may be ordered with a standard ground current input that is the same as the phase current inputs (type 8A) or with a sensitive ground input (type 8B) which is 10 times more sensitive (see the Technical Specifications section for more details). Each AC current input has an isolating transformer and an automatic shorting mechanism that shorts the input when the module is withdrawn from the chassis. There are no internal ground connections on the current inputs. Current transformers with 1 to 50000 A primaries and 1 A or 5 A secondaries may be used.

CT connections for both ABC and ACB phase rotations are identical as shown in the TYPICAL WIRING DIAGRAM.

The exact placement of a zero sequence CT so that ground fault current will be detected is shown below. Twisted pair cabling on the zero sequence CT is recommended.

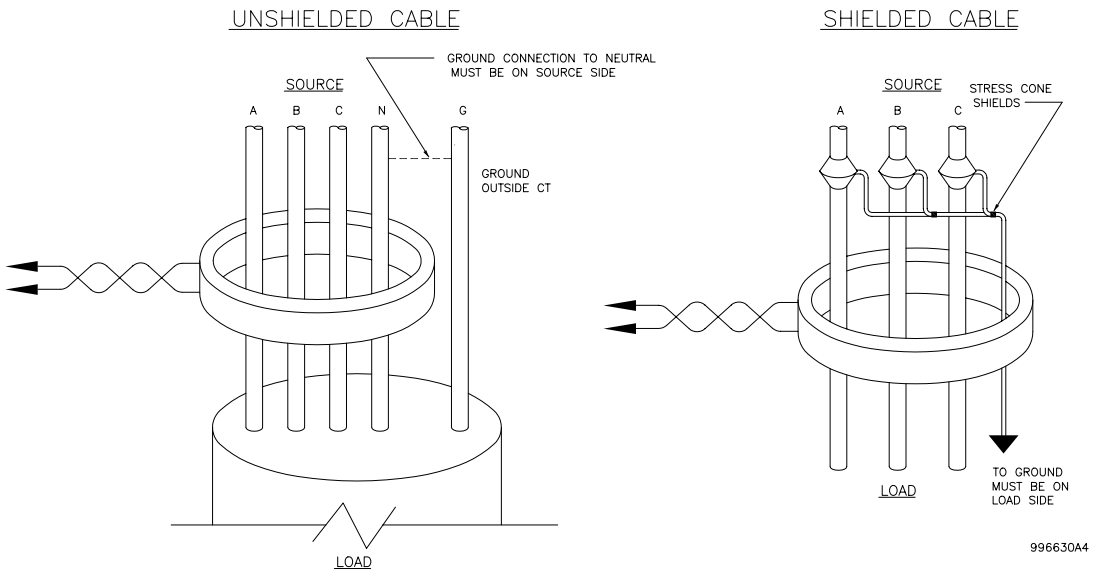

Figure 3–10: ZERO-SEQUENCE CORE BALANCE CT INSTALLATION

b) AC VOLTAGE TRANSFORMER INPUTS

The phase voltage channels are used for most metering and protection purposes. The auxiliary voltage channel is used as input for the Synchrocheck and Volts/Hertz features.

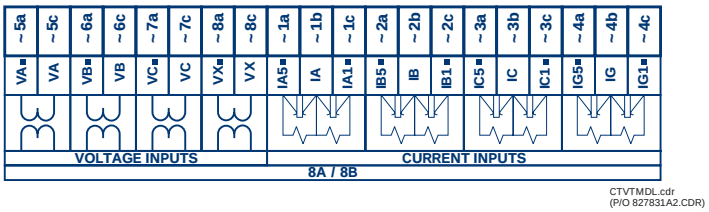

Figure 3–11: CT/VT MODULE WIRING

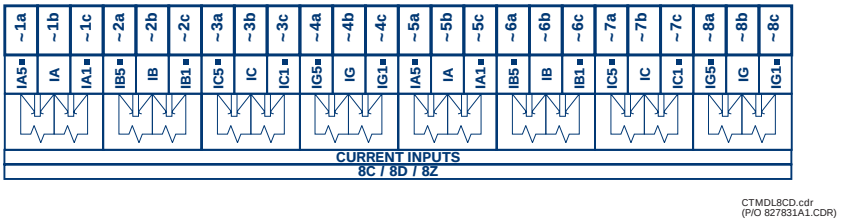

Figure 3–12: CT MODULE WIRING

NOTE

Wherever a tilde "~" symbol appears, substitute with the Slot Position of the module.

Every digital input/output module has 24 terminal connections. They are arranged as 3 terminals per row, with 8 rows in total. A given row of three terminals may be used for the outputs of one relay. For example, for Form-C relay outputs, the terminals connect to the normally open (NO), normally closed (NC), and common contacts of the relay. For a Form-A output, there are options of using current or voltage detection for feature supervision, depending on the module ordered. The terminal configuration for contact inputs is different for the two applications. When a digital I/O module is ordered with contact inputs, they are arranged in groups of four and use two rows of three terminals. Ideally, each input would be totally isolated from any other input. However, this would require that every input have two dedicated terminals and limit the available number of contacts based on the available number of terminals. So, although each input is individually optically isolated, each group of four inputs uses a single common as a reasonable compromise. This allows each group of four outputs to be supplied by wet contacts from different voltage sources (if required) or a mix of wet and dry contacts.

The tables and diagrams on the following pages illustrate the module types (6A, etc.) and contact arrangements that may be ordered for the relay. Since an entire row is used for a single contact output, the name is assigned using the module slot position and row number. However, since there are two contact inputs per row, these names are assigned by module slot position, row number, and column position.

UR RELAY FORM-A OUTPUT CONTACTS

Some Form-A outputs include circuits to monitor the DC voltage across the output contact when it is open, and the DC current through the output contact when it is closed. Each of the monitors contains a level detector whose output is set to logic “On = 1” when the current in the circuit is above the threshold setting. The voltage monitor is set to “On = 1” when the current is above about 1 to 2.5 mA, and the current monitor is set to “On = 1” when the current exceeds about 80 to 100 mA. The voltage monitor is intended to check the health of the overall trip circuit, and the current monitor can be used to seal-in the output contact until an external contact has interrupted current flow. The block diagrams of the circuits are below above for the Form-A outputs with:

a) optional voltage monitor

b) optional current monitor

c) with no monitoring

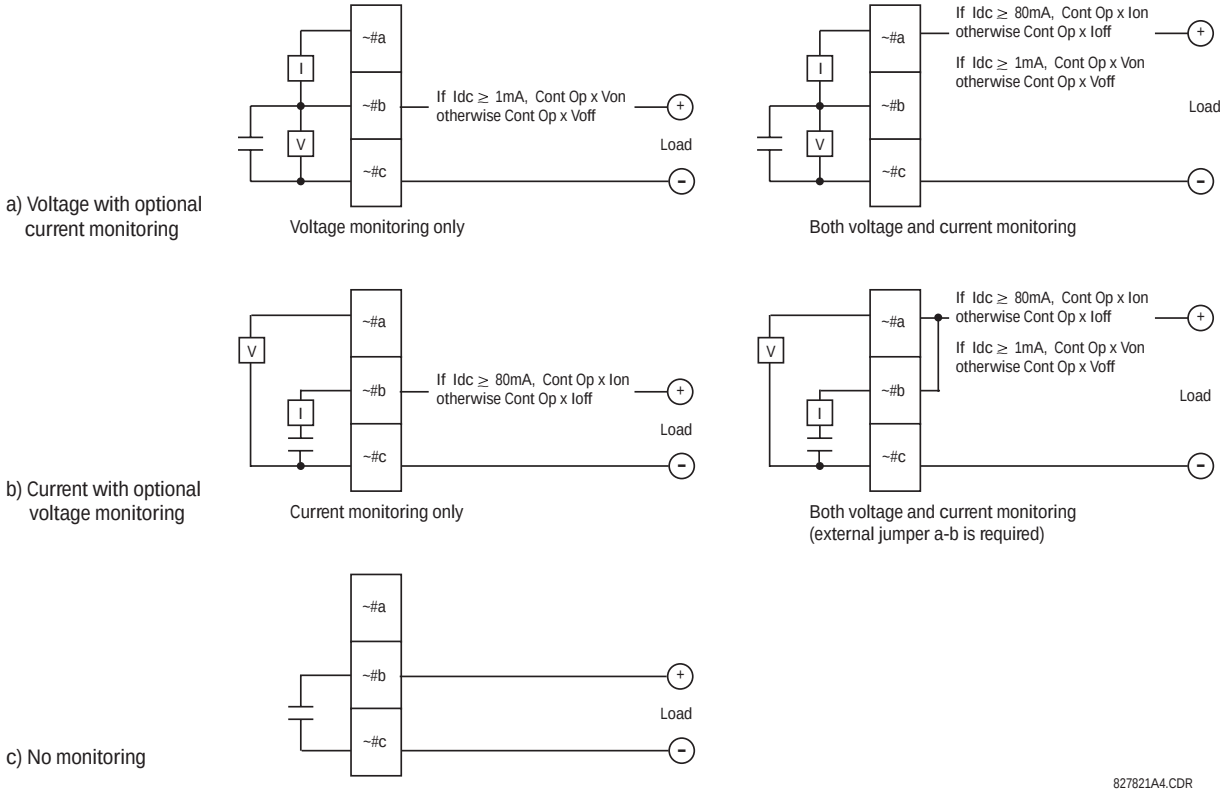

Figure 3–13: FORM-A CONTACT FUNCTIONS

The operation of voltage and current monitors is reflected with the corresponding FlexLogic™ operands (Cont Op # Von, Cont Op # Voff, Cont Op # Ion, and Cont Op # Ioff) which can be used in protection, control and alarm logic. The typical application of the voltage monitor is Breaker Trip Circuit Integrity monitoring; a typical application of the Current monitor is seal-in of the control command. Refer DIGITAL ELEMENTS section for an example of how Form A contacts can be applied for Breaker Trip Circuit Integrity Monitoring.

WARNING

Relay contacts must be considered unsafe to touch when the unit is energized!! If the relay contacts need to be used for low voltage accessible applications, it is the customer's responsibility to ensure proper insulation levels!

NOTE

USE OF FORM-A OUTPUTS IN HIGH IMPEDANCE CIRCUITS

For Form-A output contacts internally equipped with a voltage measuring cIrcuit across the contact, the circuit has an impedance that can cause a problem when used in conjunction with external high input impedance monitoring equipment such as modern relay test set trigger circuits. These monitoring circuits may continue to read the Form-A contact as being closed after it has closed and subsequently opened, when measured as an impedance.

The solution to this problem is to use the voltage measuring trigger input of the relay test set, and connect the Form-A contact through a voltage-dropping resistor to a DC voltage source. If the 48 V DC output of the power supply is used as a source, a 500 Ω, 10 W resistor is appropriate. In this configuration, the voltage across either the Form-A contact or the resistor can be used to monitor the state of the output.

NOTE

Wherever a tilde "~" symbol appears, substitute with the Slot Position of the module; wherever a number sign "#" appears, substitute the contact number

NOTE

When current monitoring is used to seal-in the Form-A contact outputs, the FlexLogic™ Operand driving the contact output should be given a reset delay of 10 ms to prevent damage of the output contact (in situations when the element initiating the contact output is bouncing, at values in the region of the pickup value).

Table 3–3: DIGITAL I/O MODULE ASSIGNMENTS

~6A I/O MODULE	
TERMINAL ASSIGNMENT	OUTPUT OR INPUT
~1	Form-A
~2	Form-A
~3	Form-C
~4	Form-C
~5a, ~5c	2 Inputs
~6a, ~6c	2 Inputs
~7a, ~7c	2 Inputs
~8a, ~8c	2 Inputs

~6B I/O MODULE	
TERMINAL ASSIGNMENT	OUTPUT OR INPUT
~1	Form-A
~2	Form-A
~3	Form-C
~4	Form-C
~5	Form-C
~6	Form-C
~7a, ~7c	2 Inputs
~8a, ~8c	2 Inputs

~6C I/O MODULE	
TERMINAL ASSIGNMENT	OUTPUT
~1	Form-C
~2	Form-C
~3	Form-C
~4	Form-C
~5	Form-C
~6	Form-C
~7	Form-C
~8	Form-C

~6D I/O MODULE	
TERMINAL ASSIGNMENT	INPUT
~1a, ~1c	2 Inputs
~2a, ~2c	2 Inputs
~3a, ~3c	2 Inputs
~4a, ~4c	2 Inputs
~5a, ~5c	2 Inputs
~6a, ~6c	2 Inputs
~7a, ~7c	2 Inputs
~8a, ~8c	2 Inputs

~6E I/O MODULE	
TERMINAL ASSIGNMENT	OUTPUT OR INPUT
~1	Form-C
~2	Form-C
~3	Form-C
~4	Form-C
~5a, ~5c	2 Inputs
~6a, ~6c	2 Inputs
~7a, ~7c	2 Inputs
~8a, ~8c	2 Inputs

~6F I/O MODULE	
TERMINAL ASSIGNMENT	OUTPUT
~1	Fast Form-C
~2	Fast Form-C
~3	Fast Form-C
~4	Fast Form-C
~5	Fast Form-C
~6	Fast Form-C
~7	Fast Form-C
~8	Fast Form-C

~6G I/O MODULE	
TERMINAL ASSIGNMENT	OUTPUT OR INPUT
~1	Form-A
~2	Form-A
~3	Form-A
~4	Form-A
~5a, ~5c	2 Inputs
~6a, ~6c	2 Inputs
~7a, ~7c	2 Inputs
~8a, ~8c	2 Inputs

~6H I/O MODULE	
TERMINAL ASSIGNMENT	OUTPUT OR INPUT
~1	Form-A
~2	Form-A
~3	Form-A
~4	Form-A
~5	Form-A
~6	Form-A
~7a, ~7c	2 Inputs
~8a, ~8c	2 Inputs

~6K I/O MODULE	
TERMINAL ASSIGNMENT	OUTPUT
~1	Form-C
~2	Form-C
~3	Form-C
~4	Form-C
~5	Fast Form-C
~6	Fast Form-C
~7	Fast Form-C
~8	Fast Form-C

~6L I/O MODULE	
TERMINAL ASSIGNMENT	OUTPUT OR INPUT
~1	Form-A
~2	Form-A
~3	Form-C
~4	Form-C
~5a, ~5c	2 Inputs
~6a, ~6c	2 Inputs
~7a, ~7c	2 Inputs
~8a, ~8c	2 Inputs

~6M I/O MODULE	
TERMINAL ASSIGNMENT	OUTPUT OR INPUT
~1	Form-A
~2	Form-A
~3	Form-C
~4	Form-C
~5	Form-C
~6	Form-C
~7a, ~7c	2 Inputs
~8a, ~8c	2 Inputs

~6N I/O MODULE	
TERMINAL ASSIGNMENT	OUTPUT OR INPUT
~1	Form-A
~2	Form-A
~3	Form-A
~4	Form-A
~5a, ~5c	2 Inputs
~6a, ~6c	2 Inputs
~7a, ~7c	2 Inputs
~8a, ~8c	2 Inputs

~6P I/O MODULE	
TERMINAL ASSIGNMENT	OUTPUT OR INPUT
~1	Form-A
~2	Form-A
~3	Form-A
~4	Form-A
~5	Form-A
~6	Form-A
~7a, ~7c	2 Inputs
~8a, ~8c	2 Inputs

~6R I/O MODULE	
TERMINAL ASSIGNMENT	OUTPUT OR INPUT
~1	Form-A
~2	Form-A
~3	Form-C
~4	Form-C
~5a, ~5c	2 Inputs
~6a, ~6c	2 Inputs
~7a, ~7c	2 Inputs
~8a, ~8c	2 Inputs

~6S I/O MODULE	
TERMINAL ASSIGNMENT	OUTPUT OR INPUT
~1	Form-A
~2	Form-A
~3	Form-C
~4	Form-C
~5	Form-C
~6	Form-C
~7a, ~7c	2 Inputs
~8a, ~8c	2 Inputs

~6T I/O MODULE	
TERMINAL ASSIGNMENT	OUTPUT OR INPUT
~1	Form-A
~2	Form-A
~3	Form-A
~4	Form-A
~5a, ~5c	2 Inputs
~6a, ~6c	2 Inputs
~7a, ~7c	2 Inputs
~8a, ~8c	2 Inputs

~6U I/O MODULE	
TERMINAL ASSIGNMENT	OUTPUT OR INPUT
~1	Form-A
~2	Form-A
~3	Form-A
~4	Form-A
~5	Form-A
~6	Form-A
~7a, ~7c	2 Inputs
~8a, ~8c	2 Inputs

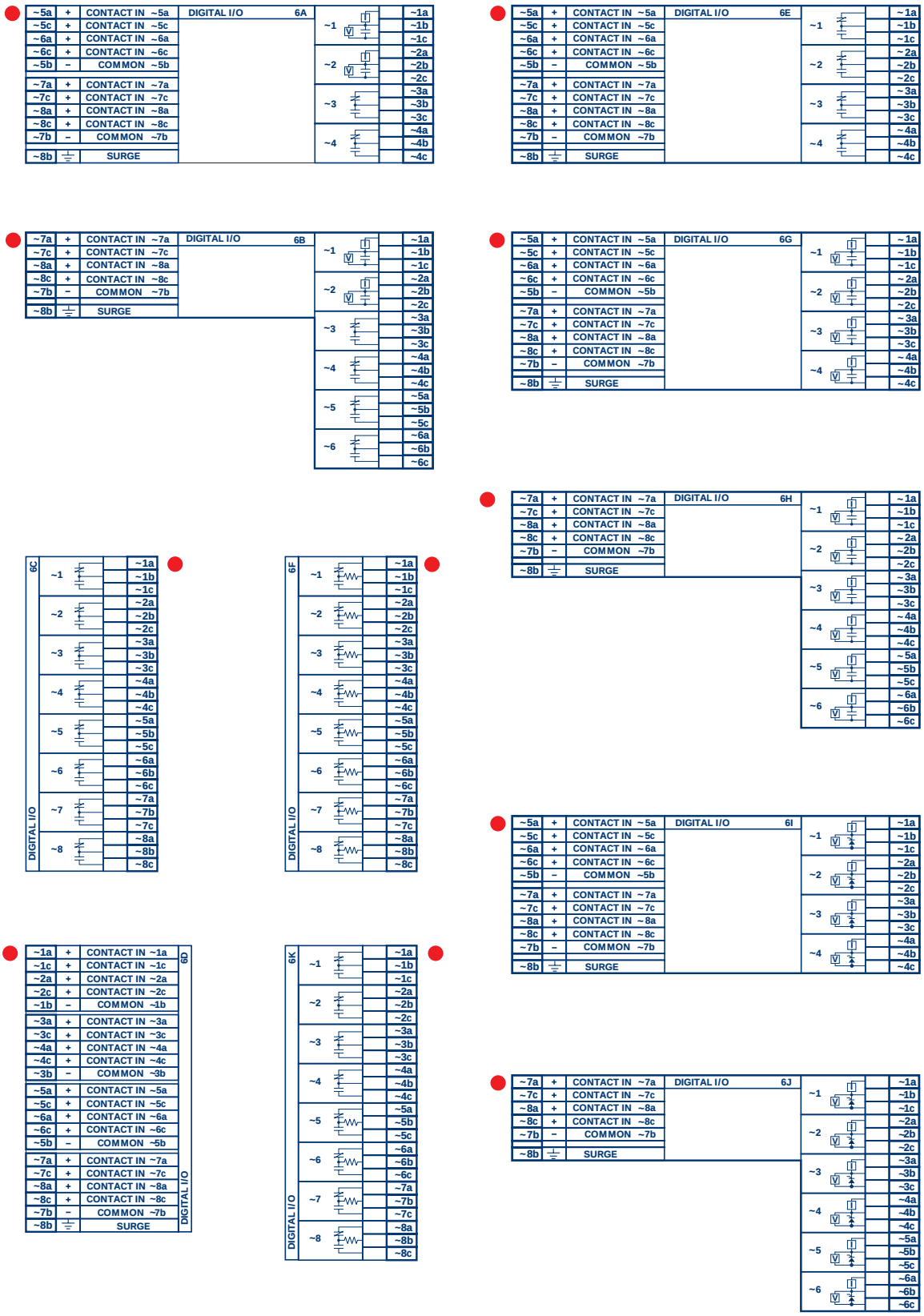

Figure 3–14: DIGITAL I/O MODULE WIRING (SHEET 1 OF 2)

Figure 3–15: DIGITAL I/O MODULE WIRING (SHEET 2 OF 2)

CAUTION

CORRECT POLARITY MUST BE OBSERVED FOR ALL CONTACT INPUT CONNECTIONS OR EQUIPMENT DAMAGE MAY RESULT.

A dry contact has one side connected to terminal B3b. This is the positive 48 V DC voltage rail supplied by the power supply module. The other side of the dry contact is connected to the required contact input terminal. Each contact input group has its own common (negative) terminal which must be connected to the DC negative terminal (B3a) of the power supply module. When a dry contact closes, a current of 1 to 3 mA will flow through the associated circuit.

A wet contact has one side connected to the positive terminal of an external DC power supply. The other side of this contact is connected to the required contact input terminal. In addition, the negative side of the external source must be connected to the relay common (negative) terminal of each contact input group. The maximum external source voltage for this arrangement is 300 V DC.

The voltage threshold at which each group of four contact inputs will detect a closed contact input is programmable as 16 V DC for 24 V sources, 30 V DC for 48 V sources, 80 V DC for 110 to 125 V sources, and 140 V DC for 250 V sources.

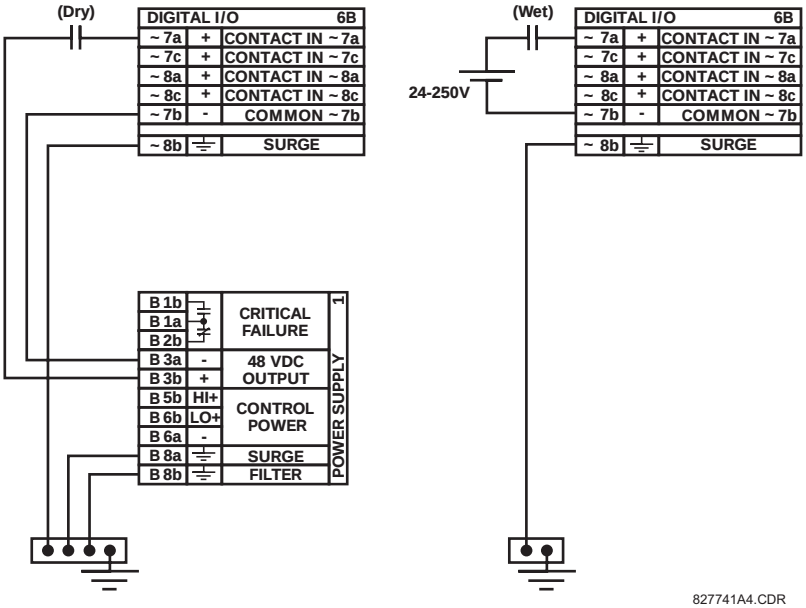

Figure 3–16: DRY AND WET CONTACT INPUT CONNECTIONS

NOTE

Wherever a tilde "~" symbol appears, substitute with the Slot Position of the module.

Contact outputs may be ordered as Form-A or Form-C. The Form A contacts may be connected for external circuit supervision. These contacts are provided with voltage and current monitoring circuits used to detect the loss of DC voltage in the circuit, and the presence of DC current flowing through the contacts when the Form-A contact closes. If enabled, the current monitoring can be used as a seal-in signal to ensure that the Form-A contact does not attempt to break the energized inductive coil circuit and weld the output contacts.

3.2.6 TRANSDUCER INPUTS/OUTPUTS

Transducer input/output modules can receive input signals from external dcmA output transducers (dcmA In) or resistance temperature detectors (RTD). Hardware and software is provided to receive signals from these external transducers and convert these signals into a digital format for use as required.

Every transducer input/output module has a total of 24 terminal connections. These connections are arranged as three terminals per row with a total of eight rows. A given row may be used for either inputs or outputs, with terminals in column "a" having positive polarity and terminals in column "c" having negative polarity. Since an entire row is used for a single input/output channel, the name of the channel is assigned using the module slot position and row number.

Each module also requires that a connection from an external ground bus be made to Terminal 8b. The figure below illustrates the transducer module types (5C, 5E, and 5F) and channel arrangements that may be ordered for the relay.

NOTE **Wherever a tilde "~" symbol appears, substitute with the Slot Position of the module.**

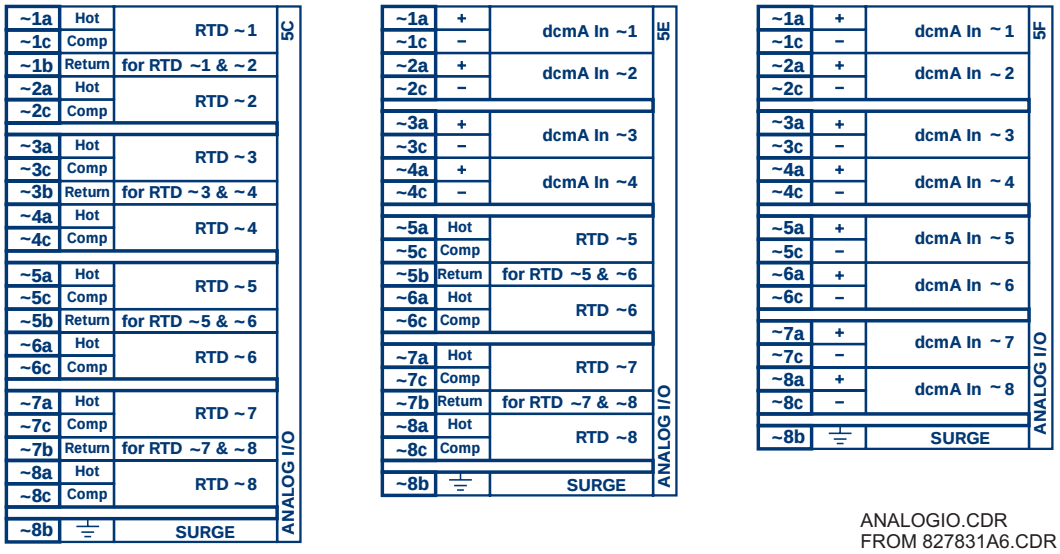

Figure 3–17: TRANSDUCER I/O MODULE WIRING

3.2.7 RS232 FACEPLATE PROGRAM PORT

A 9 pin RS232C serial port is located on the relay's faceplate for programming with a portable (personal) computer. All that is required to use this interface is a personal computer running the URPC software provided with the relay. Cabling for the RS232 port is shown in the following figure for both 9 pin and 25 pin connectors.

Note that the baud rate for this port is fixed at **19200 bps**.

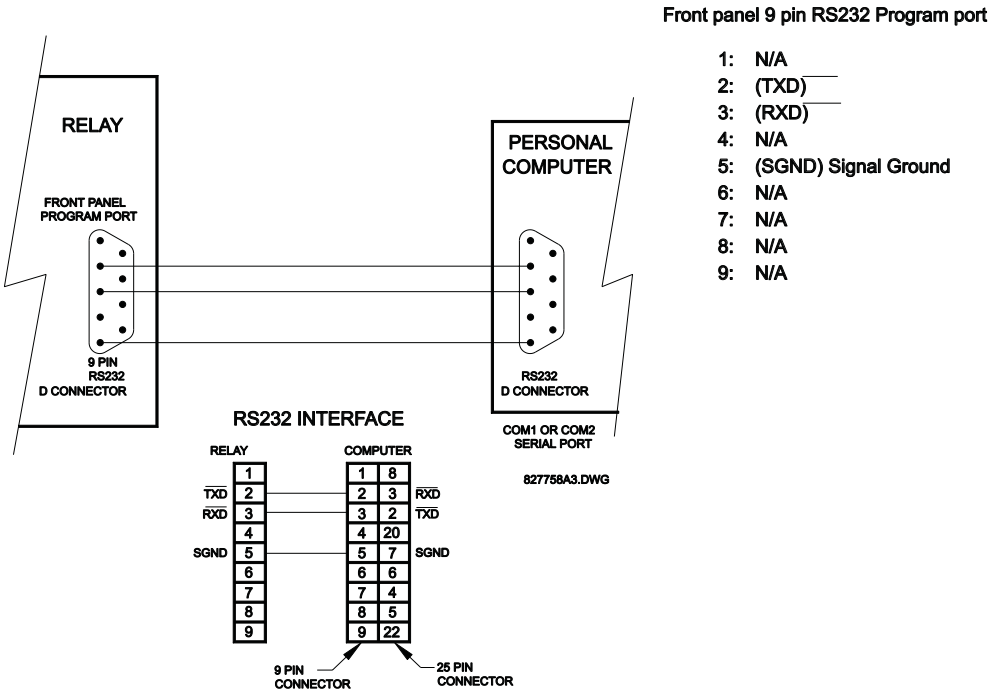

Figure 3–18: RS232 FACEPLATE PORT CONNECTION

3.2.8 CPU COMMUNICATION PORTS

In addition to the RS232 port on the faceplate, the relay provides the user with two additional communication port(s) depending on the CPU module installed.

Table 3–4: CPU COMMUNICATION PORT OPTIONS

CPU TYPE	COM 1	COM 2
9A	RS485	RS485
9C	10BASE-F	RS485
9D	Redundant 10BASE-F	RS485

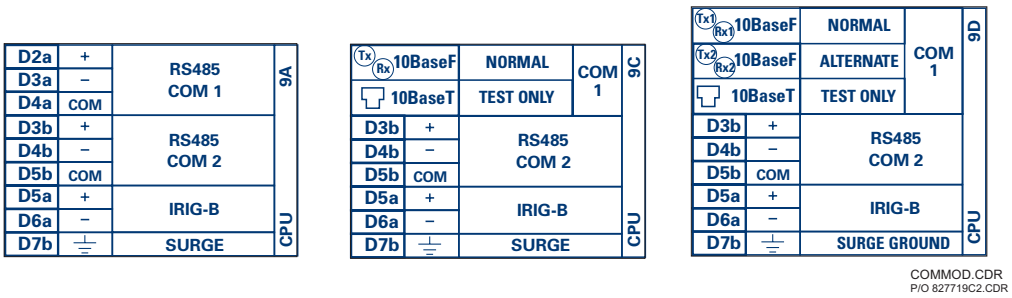

Figure 3–19: CPU MODULE COMMUNICATIONS WIRING

a) RS485 PORTS

RS485 data transmission and reception are accomplished over a single twisted pair with transmit and receive data alternating over the same two wires. Through the use of these port(s), continuous monitoring and control from a remote computer, SCADA system or PLC is possible.

To minimize errors from noise, the use of shielded twisted pair wire is recommended. Correct polarity must also be observed. For instance, the relays must be connected with all RS485 "+" terminals connected together, and all RS485 "–" terminals connected together. The COM terminal should be connected to the common wire inside the shield, when provided. To avoid loop currents, the shield should be grounded at one point only. Each relay should also be daisy chained to the next one in the link. A maximum of 32 relays can be connected in this manner without exceeding driver capability. For larger systems, additional serial channels must be added. It is also possible to use commercially available repeaters to increase the number of relays on a single channel to more than 32. Star or stub connections should be avoided entirely.

Lightning strikes and ground surge currents can cause large momentary voltage differences between remote ends of the communication link. For this reason, surge protection devices are internally provided at both communication ports. An isolated power supply with an optocoupled data interface also acts to reduce noise coupling. To ensure maximum reliability, all equipment should have similar transient protection devices installed.

Both ends of the RS485 circuit should also be terminated with an impedance as shown below.

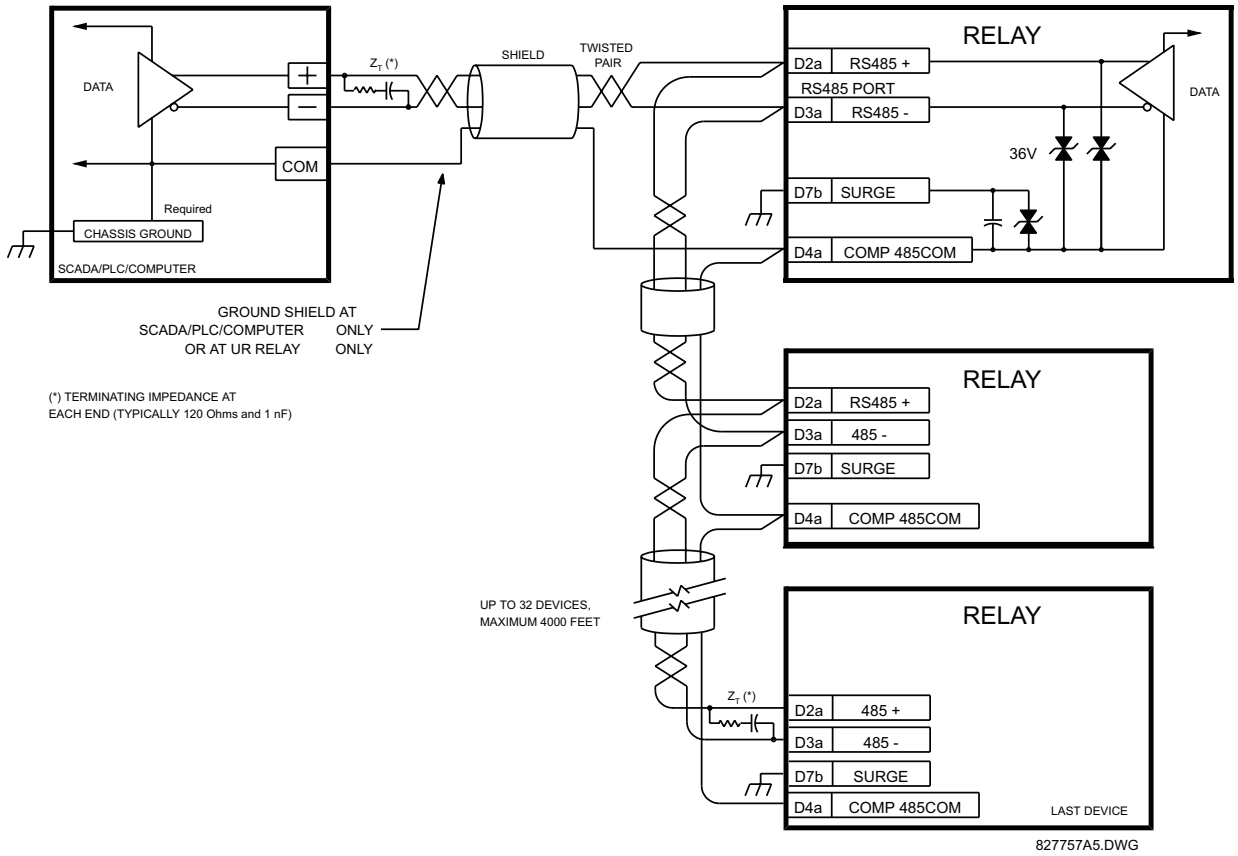

Figure 3–20: RS485 SERIAL CONNECTION

b) 10BASE-F FIBER OPTIC PORT

ENSURE THE DUST COVERS ARE INSTALLED WHEN THE FIBER IS NOT IN USE. DIRTY OR SCRATCHED CONNECTORS CAN LEAD TO HIGH LOSSES ON A FIBER LINK.

OBSERVING ANY FIBER TRANSMITTER OUTPUT MAY CAUSE INJURY TO THE EYE.

The fiber optic communication ports allow for fast and efficient communications between relays at 10 Mbps. Optical fiber may be connected to the relay supporting a wavelength of 820 nanometers in multimode. Optical fiber is only available for CPU types 9C and 9D. The 9D CPU has a 10BaseF transmitter and receiver for optical fiber communications and a second pair of identical optical fiber transmitter and receiver for redundancy.

The optical fiber sizes supported include 50/125 µm, 62.5/125 µm and 100/140 µm. The fiber optic port is designed such that the response times will not vary for any core that is 100 µm or less in diameter. For optical power budgeting, splices are required every 1 km for the transmitter/receiver pair (the ST type connector contributes for a connector loss of 0.2 dB). When splicing optical fibers, the diameter and numerical aperture of each fiber must be the same. In order to engage or disengage the ST type connector, only a quarter turn of the coupling is required.

3.2.9 IRIG-B

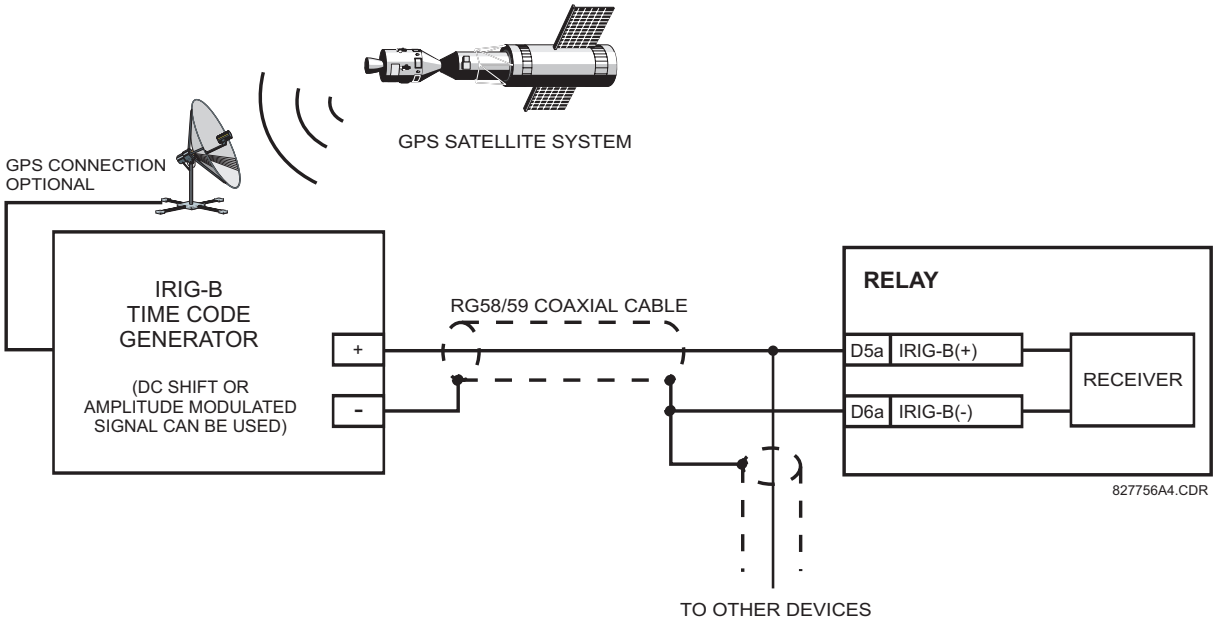

Figure 3–21: IRIG-B CONNECTION

IRIG-B is a standard time code format that allows stamping of events to be synchronized among connected devices within 1 millisecond. The IRIG time code formats are serial, width-modulated codes which can be either DC level shifted or amplitude modulated (AM). Third party equipment is available for generating the IRIG-B signal; this equipment may use a GPS satellite system to obtain the time reference so that devices at different geographic locations can also be synchronized.

4.1.1 GRAPHICAL USER INTERFACE

The URPC software provides a graphical user interface (GUI) as one of two human interfaces to a UR device. The alternate human interface is implemented via the device's faceplate keypad and display (see FACEPLATE INTERFACE section in this chapter).

URPC provides a single facility to configure, monitor, maintain, and trouble-shoot the operation of relay functions, connected over local or wide area communication networks. It can be used while disconnected (i.e. off-line) or connected (i.e. on-line) to a UR device. In off-line mode, settings files can be created for eventual downloading to the device. In on-line mode, you can communicate with the device in real-time.

The URPC software, provided with every F35 relay, can be run from any computer supporting Microsoft Windows® 95, 98, or NT. This chapter provides a summary of the basic URPC software interface features. The URPC Help file provides details for getting started and using the URPC software interface.

4.1.2 CREATING A SITE LIST

To start using the URPC program, a Site List must first be created. See the instructions in the URPC Help program under the topic "Creating a Site List".

4.1.3 URPC® SOFTWARE OVERVIEW

a) ENGAGING A COMMUNICATING DEVICE

The URPC software may be used in on-line mode (relay connected) to directly communicate with a UR relay. Communicating relays are organized and grouped by communication interfaces and into sites. Sites may contain any number of relays selected from the UR product series.

b) USING SETTINGS FILES

The URPC software interface supports three ways of handling changes to relay settings:

- In off-line mode (relay disconnected) to create or edit relay settings files for later download to communicating relays.
- While connected to a communicating relay to directly modify any relay settings via relay data view windows, and then save the settings to the relay.
- You can create/edit settings files and then write them to the relay while the interface is connected to the relay.

Settings files are organized on the basis of file names assigned by the user. A settings file contains data pertaining to the following types of relay settings:

- Device Definition
- Product Setup
- System Setup
- FlexLogic™
- Grouped Elements
- Control Elements
- Inputs/Outputs
- Testing

Factory default values are supplied and can be restored after any changes.

c) CREATING / EDITING FLEXLOGIC™ EQUATIONS

You can create or edit a FlexLogic™ equation in order to customize the relay. You can subsequently view the automatically generated logic diagram.

d) VIEWING ACTUAL VALUES

You can view real-time relay data such as input/output status and measured parameters.

e) VIEWING TRIGGERED EVENTS

While the interface is in either on-line or off-line mode, you can view and analyze data generated by triggered specified parameters, via:

- **Event Recorder facility**

  The event recorder captures contextual data associated with the last 1024 events, listed in chronological order from most recent to oldest.

- **Oscillography facility**

  The oscillography waveform traces and digital states are used to provide a visual display of power system and relay operation data captured during specific triggered events.

f) CREATING INTERACTIVE SINGLE LINE DIAGRAMS

The URPC® software provides an icon-based interface facility for designing and monitoring electrical schematic diagrams of sites employing UR relays.

g) FILE SUPPORT

- **Execution**

  Any URPC file which is double clicked or opened will launch the application, or provide focus to the already opened application. If the file was a settings file (*.urs) which had been removed from the Settings List tree menu, it will be added back to the Settings List tree menu.

- **Drag and Drop**

  The Site List and Settings List control bar windows are each mutually a drag source and a drop target for device-order-code-compatible files or individual menu items. Also, the Settings List control bar window and any Windows Explorer directory folder are each mutually a file drag source and drop target.

  New files which are dropped into the Settings List window are added to the tree which is automatically sorted alphabetically with respect to settings file names. Files or individual menu items which are dropped in the selected device menu in the Site List window will automatically be sent to the on-line communicating device.

h) UR FIRMWARE UPGRADES

The firmware of a UR device can be upgraded, locally or remotely, via the URPC® software. The corresponding instructions are provided by the URPC® Help program under the topic “Upgrading Firmware”.

NOTE

Modbus addresses assigned to firmware modules, features, settings, and corresponding data items (i.e. default values, min/max values, data type, and item size) may change slightly from version to version of firmware. The addresses are rearranged when new features are added or existing features are enhanced or modified. The “EEPROM DATA ERROR” message displayed after upgrading/downgrading the firmware is a resettable, self-test message intended to inform users that the Modbus addresses have changed with the upgraded firmware. This message does not signal any problems when appearing after firmware upgrades.

4.1.4 URPC® SOFTWARE MAIN WINDOW

The URPC software main window supports the following primary display components:

a. Title bar which shows the pathname of the active data view

b. Main window menu bar

c. Main window tool bar

d. Site List control bar window

e. Settings List control bar window

f. Device data view window(s), with common tool bar

g. Settings File data view window(s), with common tool bar

h. Workspace area with data view tabs

i. Status bar

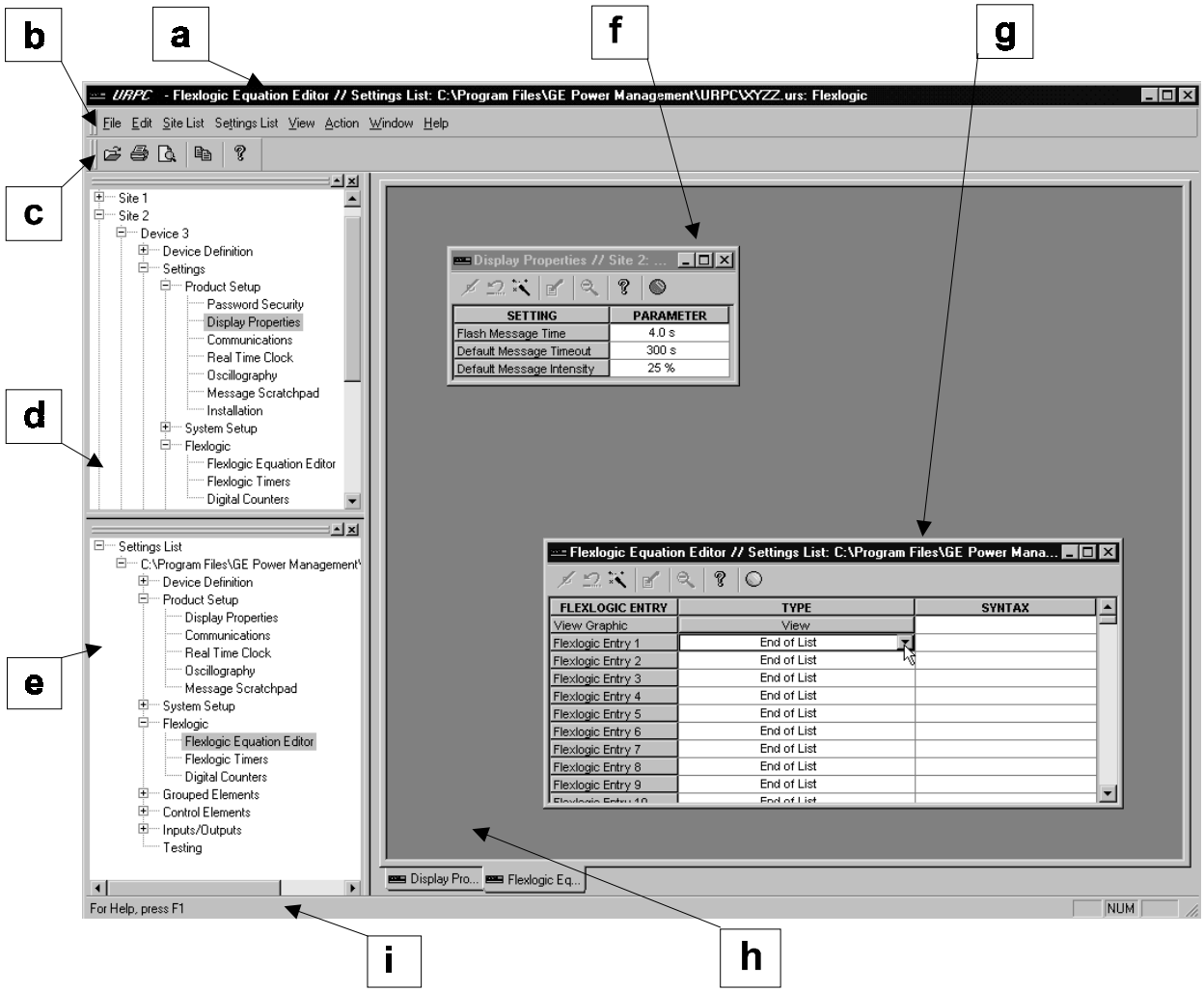

Figure 4–1: URPC SOFTWARE MAIN WINDOW

4.2.1 FACEPLATE

The keypad/display/LED interface is one of two alternate human interfaces supported. The other alternate human interface is implemented via the URPC software. The UR faceplate interface is available in two configurations: horizontal or vertical. The faceplate interface consists of several functional panels.

The faceplate is hinged to allow easy access to the removable modules. There is also a removable dust cover that fits over the faceplate which must be removed in order to access the keypad panel. The following two figures show the horizontal and vertical arrangement of faceplate panels.

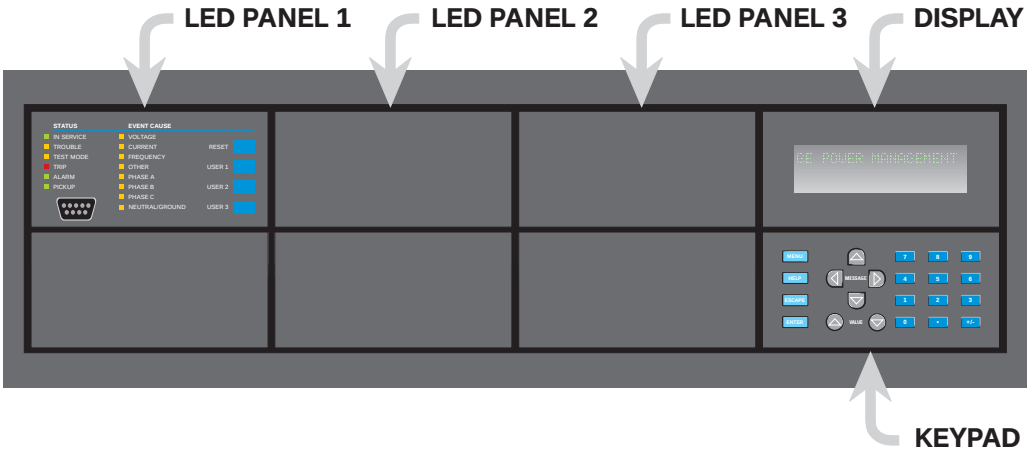

Figure 4–2: UR HORIZONTAL FACEPLATE PANELS

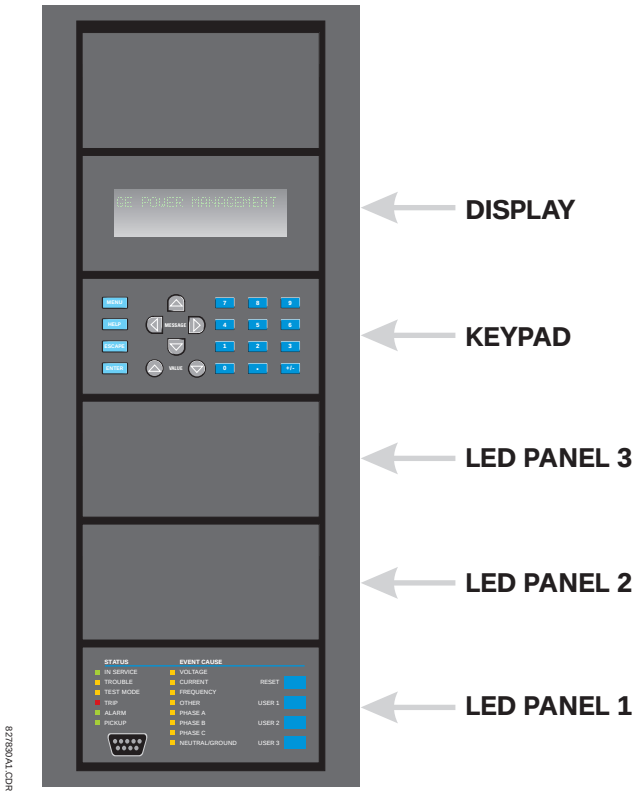

Figure 4–3: UR VERTICAL FACEPLATE PANELS

a) LED PANEL 1

This panel provides several LED indicators, several keys, and a communications port. The RESET key is used to reset any latched LED indicator or target message, once the condition has been cleared (these latched conditions can also be reset via the **SETTINGS** ⇨⇩ **INPUT/OUTPUTS** ⇨⇩ **RESETTING** menu). The USER keys are not used in this relay. The RS232 port is intended for connection to a portable PC.

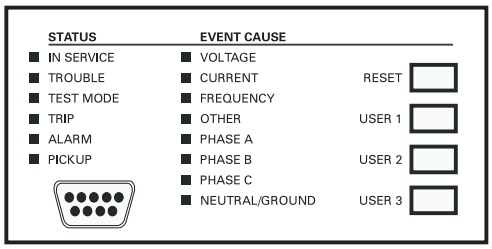

Figure 4–4: LED PANEL 1

STATUS INDICATORS:

- **IN SERVICE**: Indicates that control power is applied; all monitored I/O and internal systems are OK; the relay has been programmed.
- **TROUBLE**: Indicates that the relay has detected an internal problem.
- **TEST MODE**: Indicates that the relay is in test mode.
- **TRIP**: Indicates that the selected FlexLogic™ operand serving as a Trip switch has operated. This indicator always latches; the RESET command must be initiated to allow the latch to be reset.
- **ALARM**: Indicates that the selected FlexLogic™ operand serving as an Alarm switch has operated. This indicator is never latched.
- **PICKUP**: Indicates that an element is picked up. This indicator is never latched.

EVENT CAUSE INDICATORS:

These indicate the input type that was involved in a condition detected by an element that is operated or has a latched flag waiting to be reset.

- **VOLTAGE**: Indicates voltage was involved.
- **CURRENT**: Indicates current was involved.
- **FREQUENCY**: Indicates frequency was involved.
- **OTHER**: Indicates a composite function was involved.
- **PHASE A**: Indicates Phase A was involved.
- **PHASE B**: Indicates Phase B was involved.
- **PHASE C**: Indicates Phase C was involved.
- **NEUTRAL/GROUND**: Indicates neutral or ground was involved.

b) LED PANELS 2 & 3

These panels provide 48 amber LED indicators whose operation is controlled by the user. Support for applying a customized label beside every LED is provided.

User customization of LED operation is of maximum benefit in installations where languages other than English are used to communicate with operators. Refer to the USER-PROGRAMMABLE LEDs section in Chapter 5 for the settings used to program the operation of the LEDs on these panels.

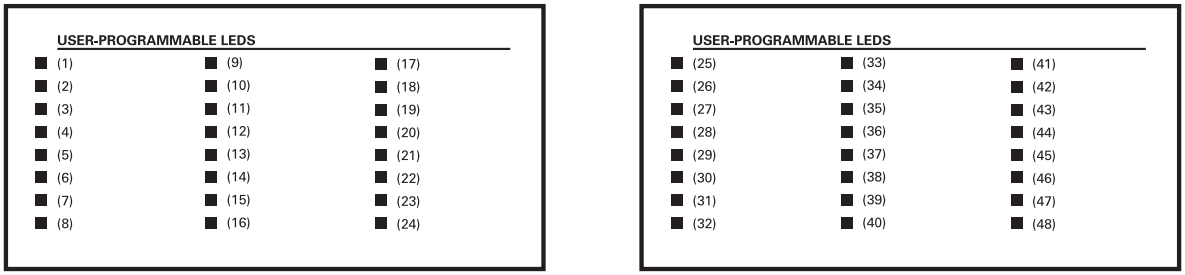

Figure 4–5: LED PANELS 2 AND 3 (INDEX TEMPLATE)

4

c) DEFAULT LABELS FOR LED PANEL 2

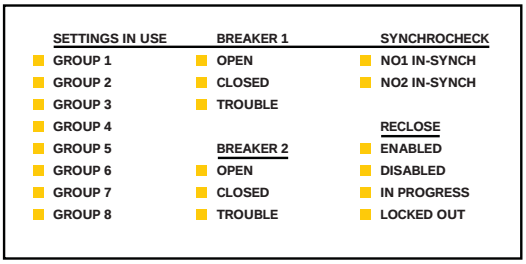

Figure 4–6: LED PANEL 2 (DEFAULT LABEL)

The default labels are meant to represent:

- **GROUP 1...8**: The illuminated GROUP is the active settings group.
- **BREAKER n OPEN**: The breaker is open.
- **BREAKER n CLOSED**: The breaker is closed.
- **BREAKER n TROUBLE**: A problem related to the breaker has been detected.
- **SYNCHROCHECK NO n IN-SYNCH**: Voltages have satisfied the synchrocheck element.
- **RECLOSE ENABLED**: The recloser is operational.
- **RECLOSE DISABLED**: The recloser is not operational.
- **RECLOSE IN PROGRESS**: A reclose operation is in progress.
- **RECLOSE LOCKED OUT**: The recloser is not operational and requires a reset.

The relay is shipped with the default label for the LED panel 2. The LEDs, however, are not pre-programmed. To match the pre-printed label, the LED settings must be entered as shown in the USER-PROGRAMMABLE LEDs section of the SETTINGS chapter. The LEDs are fully user-programmable. The default labels can be replaced by user-printed labels for both LED panels 2 and 3 as explained in the next section.

4.2.3 CUSTOM LABELING OF LEDs

Custom labeling of an LED-only panel is facilitated by downloading a 'zip' file from

http://www.ge.com/indsys/pm/drawings/ur/custmod.zip.

This file provides templates and instructions for creating appropriate labeling for the LED panel. The following procedures are contained in the downloadable file. The CorelDRAW panel-templates provide relative LED locations and located example-text (x) edit boxes. The following procedure demonstrates how to install/uninstall the custom panel labeling.

1. Remove the clear LEXAN FRONT COVER (P/N: 1501-0014).

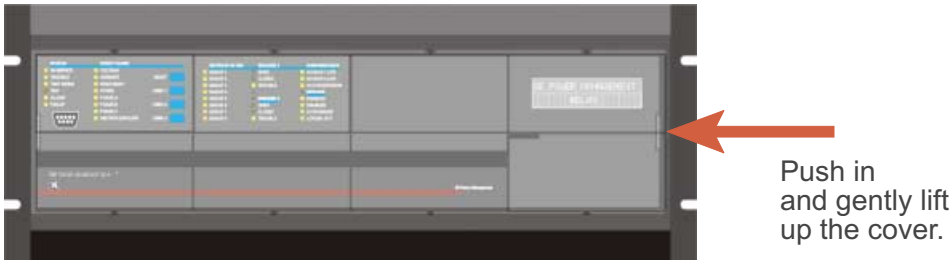

2. Pop out the LED MODULE and/or BLANK MODULE with a screwdriver as shown below. Be careful not to damage the plastic.

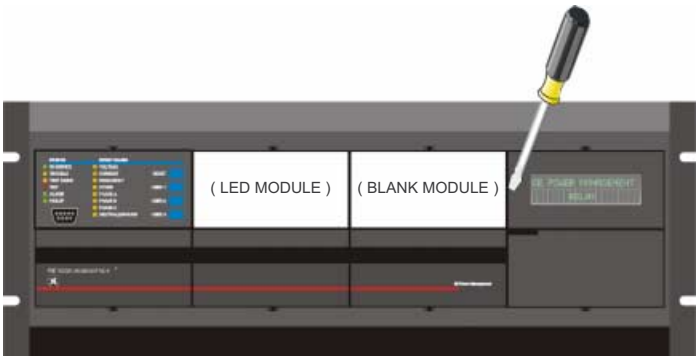

3. Place the left side of the customized module back to the front panel frame, then snap back the right side.
4. Put the clear LEXAN FRONT COVER back into place.

4.2.4 CUSTOMIZING THE DISPLAY MODULE

The following items are required to customize the UR display module:

- Black and white or color printer (color preferred)
- CorelDRAW version 5.0 or later software
- 1 each of: 8.5 x 11 white paper, exacto knife, ruler, custom display module (P/N: 1516-0069), custom module cover (P/N: 1502-0015)

1. Open the LED panel customization template in CorelDRAW. Add text in places of the Xs on the template(s) with the **Edit > Text** menu command. Delete the X place holders as required.Setup the print copy by selecting the **File > Print** menu command and pressing the "Properties" button.
2. On the **Page Setup** tab, choose **Paper Size**: "Letter" and **Orientation**: "Landscape" and press "OK".
3. Click the "Options" button and select the **Layout** tab.
4. For **Position and Size** enable the "Center image" and "Maintain aspect ratio" check boxes and press "OK", then "OK" once more to print.
5. From the printout, cut-out the BACKGROUND TEMPLATE from the three windows (use the cropmarks as a guide).

6. Put the BACKGROUND TEMPLATE on top of the custom display module (P/N: 1513-0069) and snap the clear cutome module cover (P/N: 1502-0015) over it and the templates.

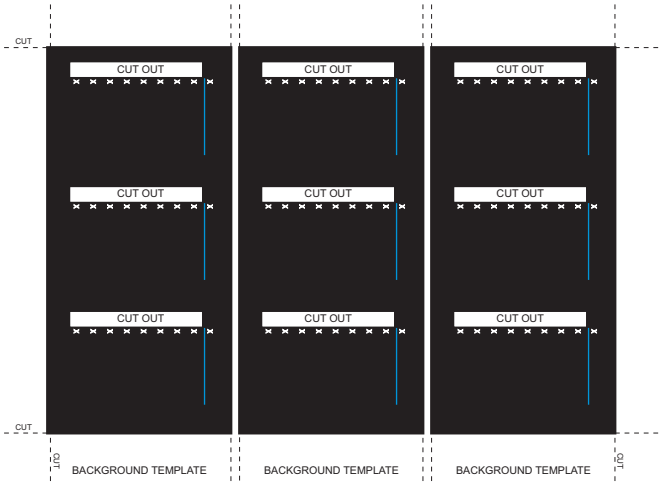

Figure 4–7: LED PANEL CUSTOMIZATION TEMPLATES (EXAMPLE)

4.2.5 DISPLAY

All messages are displayed on a 2 × 20 character vacuum fluorescent display to make them visible under poor lighting conditions. Messages are displayed in English and do not require the aid of an instruction manual for deciphering. While the keypad and display are not actively being used, the display will default to defined messages. Any high priority event driven message will automatically override the default message and appear on the display.

4.2.6 KEYPAD

Display messages are organized into 'pages' under the following headings: Actual Values, Settings, Commands, and Targets. The MENU key navigates through these pages. Each heading page is broken down further into logical subgroups.

The ▲ ◀ MESSAGE ▶ ▼ keys navigate through the subgroups. The ▲ VALUE ▼ keys scroll increment or decrement numerical setting values when in programming mode. These keys also scroll through alphanumeric values in the text edit mode. Alternatively, values may also be entered with the numeric keypad.

The ▪ key initiates and advance to the next character in text edit mode or enters a decimal point. The HELP key may be pressed at any time for context sensitive help messages. The ENTER key stores altered setting values.

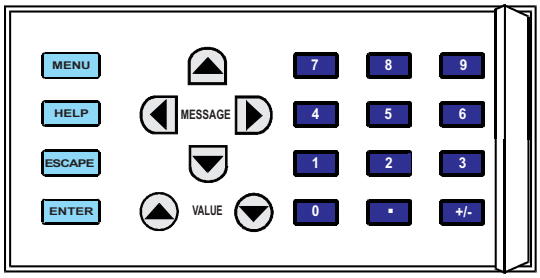

Figure 4–8: KEYPAD

4.2.7 MENUS

a) NAVIGATION

Press the MENU key to select the desired header display page (top-level menu). The header title appears momentarily followed by a header display page menu item. Each press of the MENU key advances through the main heading pages as illustrated below.

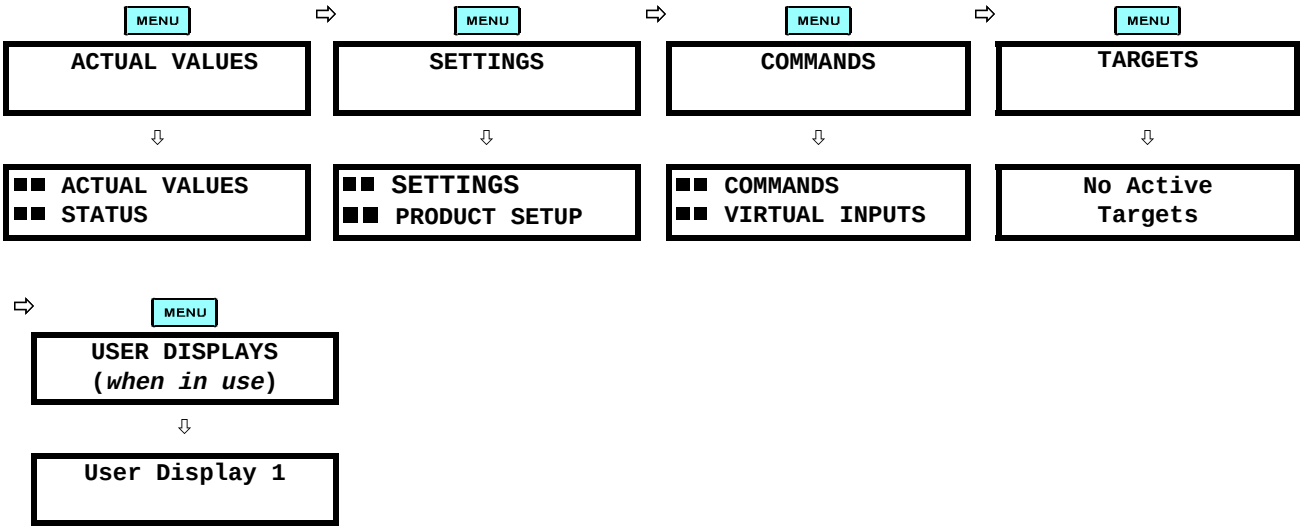

b) HIERARCHY

The setting and actual value messages are arranged hierarchically. The header display pages are indicated by double scroll bar characters (■■), while sub-header pages are indicated by single scroll bar characters (■). The header display pages represent the highest level of the hierarchy and the sub-header display pages fall below this level. The MESSAGE ▲ and ▼ keys move within a group of headers, sub-headers, setting values, or actual values. Continually pressing the MESSAGE ▶ key from a header display displays specific information for the header category. Conversely, continually pressing the ◀ MESSAGE key from a setting value or actual value display returns to the header display.

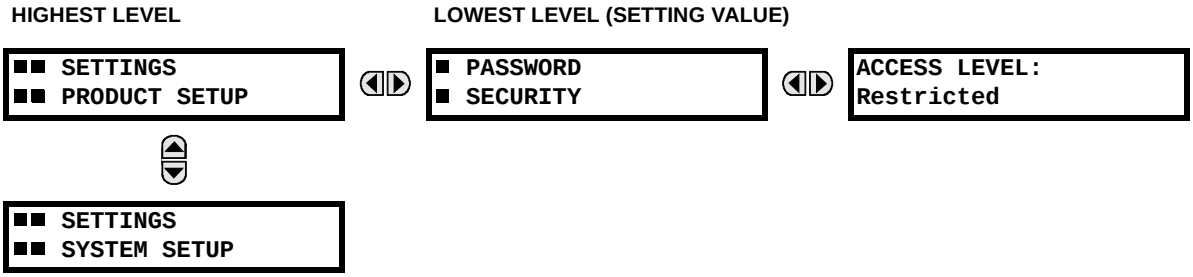

c) EXAMPLE MENU NAVIGATION SCENARIO

```
■■ ACTUAL VALUES
■■ STATUS
```

Press the MENU key until the header for the first Actual Values page appears. This page contains system and relay status information. Repeatedly press the ▲ ◀ MESSAGE ▶ ▼ keys to display the other actual value headers.

⇩

```
■■ SETTINGS
■■ PRODUCT SETUP
```

Press the MENU key until the header for the first page of Settings appears. This page contains settings to configure the relay.

⇩

```
■■ SETTINGS
■■ SYSTEM SETUP
```

Press the MESSAGE ▼ key to move to the next Settings page. This page contains settings for system setup. Repeatedly press the ▲ MESSAGE ▼ keys to display the other setting headers and then back to the first Settings page header.

⇩

```
■ PASSWORD
■ SECURITY
```

From the Settings page one header (Product Setup), press the MESSAGE ▶ key once to display the first sub-header (Password Security).

⇩

```
ACCESS LEVEL:
Restricted
```

Press the MESSAGE ▶ key once more and this will display the first setting for Password Security. Pressing the MESSAGE ▼ key repeatedly will display the remaining setting messages for this sub-header.

⇩

```
■ PASSWORD
■ SECURITY
```

Press the MESSAGE ◀ key once to move back to the first sub-header message.

⇩

```
■ DISPLAY
■ PROPERTIES
```

Pressing the MESSAGE ▼ key will display the second setting sub-header associated with the Product Setup header.

⇩

```
FLASH MESSAGE
TIME: 1.0 s
```

Press the MESSAGE ▶ key once more and this will display the first setting for Display Properties.

⇩

```
DEFAULT MESSAGE
INTENSITY: 25%
```

To view the remaining settings associated with the Display Properties subheader, repeatedly press the MESSAGE ▼ key. The last message appears as shown.

4.2.8 CHANGING SETTINGS

a) ENTERING NUMERICAL DATA

Each numerical setting has its own minimum, maximum, and increment value associated with it. These parameters define what values are acceptable for a setting.

```
FLASH MESSAGE
TIME:  1.0 s
```

For example, select the **SETTINGS ⇨ PRODUCT SETUP ⇨⇩ DISPLAY PROPERTIES ⇨ FLASH MESSAGE TIME** setting.

⇩

```
MINIMUM:   0.5
MAXIMUM:  10.0
```

Press the HELP key to view the minimum and maximum values. Press the HELP key again to view the next context sensitive help message.

Two methods of editing and storing a numerical setting value are available.

- **0 to 9** and ▪ (decimal point): The relay numeric keypad works the same as that of any electronic calculator. A number is entered one digit at a time. The leftmost digit is entered first and the rightmost digit is entered last. Pressing the MESSAGE ◀ key or pressing the ESCAPE key, returns the original value to the display.
- ▲ **VALUE** ▼: The VALUE ▲ key increments the displayed value by the step value, up to the maximum value allowed. While at the maximum value, pressing the VALUE ▲ key again will allow the setting selection to continue upward from the minimum value. The VALUE ▼ key decrements the displayed value by the step value, down to the

minimum value. While at the minimum value, pressing the VALUE ⊖ key again will allow the setting selection to continue downward from the maximum value.

```
FLASH MESSAGE
TIME:  2.5 s
```

As an example, set the flash message time setting to 2.5 seconds. Press the appropriate numeric keys in the sequence "2 . 5". The display message will change as the digits are being entered.

⇩

```
NEW SETTING
HAS BEEN STORED
```

Until the [ENTER] key is pressed, editing changes are not registered by the relay. Therefore, press the [ENTER] key to store the new value in memory. This flash message will momentarily appear as confirmation of the storing process. Numerical values which contain decimal places will be rounded-off if more decimal place digits are entered than specified by the step value.

b) ENTERING ENUMERATION DATA

Enumeration settings have data values which are part of a set, whose members are explicitly defined by a name. A set is comprised of two or more members.

```
ACCESS LEVEL:
Restricted
```

For example, the selections available for **ACCESS LEVEL** are "Restricted", "Command", "Setting", and "Factory Service".

Enumeration type values are changed using the ⊕ VALUE ⊖ keys. The VALUE ⊕ key displays the next selection while the VALUE ⊖ key displays the previous selection.

```
ACCESS LEVEL:
Setting
```

If the **ACCESS LEVEL** needs to be "Setting", press the ⊕ VALUE ⊖ keys until the proper selection is displayed. Press the [HELP] key at any time for the context sensitive help messages.

⇩

```
NEW SETTING
HAS BEEN STORED
```

Changes are not registered by the relay until the [ENTER] key is pressed. Pressing [ENTER] stores the new value in memory. This flash message momentarily appears as confirmation of the storing process.

c) ENTERING ALPHANUMERIC TEXT

Text settings have data values which are fixed in length, but user-defined in character. They may be comprised of upper case letters, lower case letters, numerals, and a selection of special characters.

In order to allow the relay to be customized for specific applications, there are several places where text messages may be programmed. One example is the MESSAGE SCRATCHPAD. To enter alphanumeric text messages, the following procedure should be followed:

Example: to enter the text, “Breaker #1”

1. Press [■] to enter text edit mode.
2. Press the VALUE ⊕ or VALUE ⊖ key until the character 'B' appears; press [■] to advance the cursor to the next position.
3. Repeat step 2 for the remaining characters: r,e,a,k,e,r, ,#,1.
4. Press [ENTER] to store the text.
5. If you have any problem, press the [HELP] key to view the context sensitive help. Flash messages will sequentially appear for several seconds each. For the case of a text setting message, the [HELP] key displays how to edit and store a new value.

d) ACTIVATING THE RELAY

```
RELAY SETTINGS:
Not Programmed
```

When the relay is powered up, the TROUBLE indicator will be on, the IN SERVICE indicator off, and this message displayed. This indicates that the relay is in the "Not Programmed" state and is safeguarding (output relays blocked) against the installation of a relay whose settings have not been entered. This message will remain until the relay is explicitly put in the "Programmed" state.

To change the **RELAY SETTINGS:** "Not Programmed" mode to "Programmed", proceed as follows:

1. Press the MENU key until the **SETTINGS** header flashes momentarily and the **SETTINGS PRODUCT SETUP** message appears on the display.
2. Press the MESSAGE ▶ key until the **PASSWORD SECURITY** message appears on the display.
3. Press the MESSAGE ▼ key until the **INSTALLATION** message appears on the display.
4. Press the MESSAGE ▶ key until the **RELAY SETTINGS: Not Programmed** message is displayed.

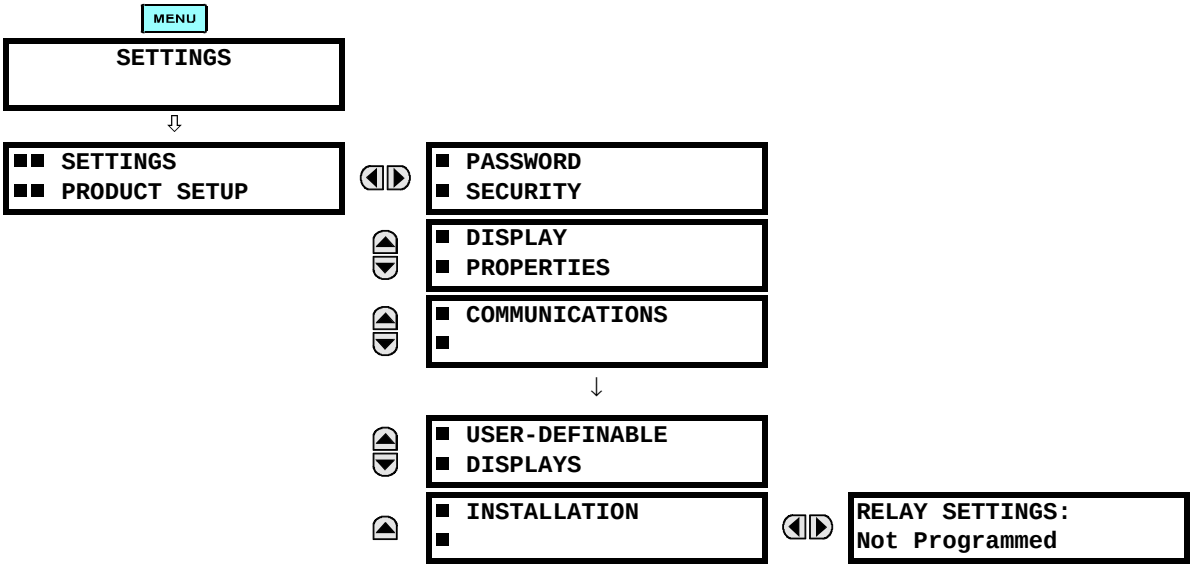

5. After the **RELAY SETTINGS: Not Programmed** message appears on the display, press the VALUE ▲ key or the VALUE ▼ key to change the selection to "Programmed".
6. Press the ENTER key.

7. When the "NEW SETTING HAS BEEN STORED" message appears, the relay will be in "Programmed" state and the IN SERVICE indicator will turn on.

e) ENTERING INITIAL PASSWORDS

To enter the initial SETTING (or COMMAND) PASSWORD, proceed as follows:

1. Press the MENU key until the 'SETTINGS' header flashes momentarily and the ‘SETTINGS PRODUCT SETUP’ message appears on the display.
2. Press the MESSAGE ▶ key until the ‘ACCESS LEVEL:’ message appears on the display.

3. Press the MESSAGE key until the ‘CHANGE SETTING (or COMMAND) PASSWORD:’ message appears on the display.

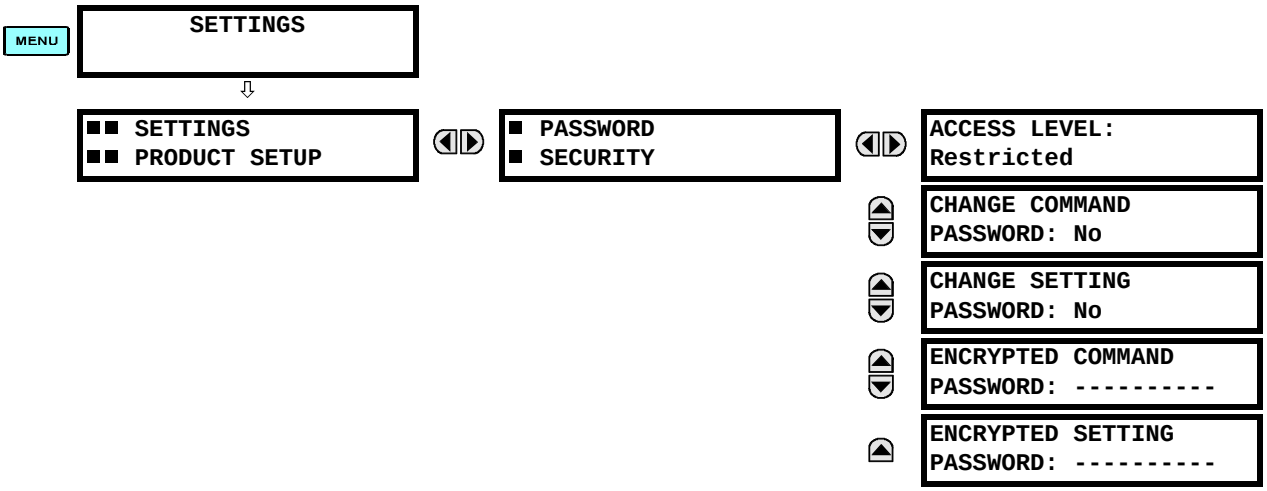

4. After the 'CHANGE...PASSWORD' message appears on the display, press the VALUE key or the VALUE key to change the selection to Yes.
5. Press the ENTER key and the display will prompt you to 'ENTER NEW PASSWORD'.
6. Type in a numerical password (up to 10 characters) and press the ENTER key.
7. When the 'VERIFY NEW PASSWORD' is displayed, re-type in the same password and press ENTER.

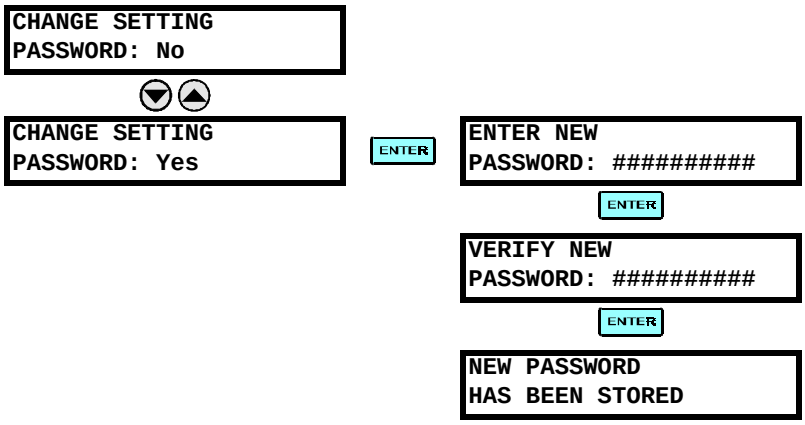

8. When the 'NEW PASSWORD HAS BEEN STORED' message appears, your new SETTING (or COMMAND) PASSWORD will be active.

f) CHANGING EXISTING PASSWORD

To change an existing password, follow the instructions in the previous section with the following exception. A message will prompt you to type in the existing password (for each security level) before a new password can be entered.

In the event that a password has been lost (forgotten), submit the corresponding Encrypted Password from the PASSWORD SECURITY menu to the Factory for decoding.

5.1.1 SETTINGS MAIN MENU

SETTINGS PRODUCT SETUP	PASSWORD SECURITY	See page 5-7.
	DISPLAY PROPERTIES	See page 5-8.
	COMMUNICATIONS	See page 5-8.
	MODBUS USER MAP	See page 5-15.
	REAL TIME CLOCK	See page 5-15.
	OSCILLOGRAPHY	See page 5-16.
	DATA LOGGER	See page 5-18.
	DEMAND	See page 5-18.
	USER-PROGRAMMABLE LEDS	See page 5-20.
	FLEX STATE PARAMETERS	See page 5-21.
	USER-DEFINABLE DISPLAYS	See page 5-21.
	INSTALLATION	See page 5-23.
SETTINGS SYSTEM SETUP	AC INPUTS	See page 5-24.
	POWER SYSTEM	See page 5-25.
	SIGNAL SOURCES	See page 5-26.
	FLEXCURVES	See page 5-28.
SETTINGS FLEXLOGIC	FLEXLOGIC EQUATION EDITOR	See page 5-40.
	FLEXLOGIC TIMERS	See page 5-40.
	FLEXELEMENTS	See page 5-41.

SETTINGS GROUPED ELEMENTS	SETTING GROUP 1	See page 5-45.
	SETTING GROUP 2	
	SETTING GROUP 3	
	SETTING GROUP 4	
	SETTING GROUP 5	
	SETTING GROUP 6	
	SETTING GROUP 7	
	SETTING GROUP 8	
SETTINGS CONTROL ELEMENTS	SETTING GROUPS	See page 5-65.
	UNDERFREQUENCY	See page 5-66.
	AUTORECLOSE	See page 5-67.
	DIGITAL ELEMENTS	See page 5-74.
SETTINGS INPUTS/OUTPUTS	CONTACT INPUTS	See page 5-77.
	VIRTUAL INPUTS	See page 5-79.
	CONTACT OUTPUTS	See page 5-80.
	VIRTUAL OUTPUTS	See page 5-81.
	REMOTE DEVICES	See page 5-81.
	REMOTE INPUTS	See page 5-82.
	REMOTE OUTPUTS DNA BIT PAIRS	See page 5-83.
	REMOTE OUTPUTS UserSt BIT PAIRS	See page 5-84.
	RESETTING	See page 5-84.

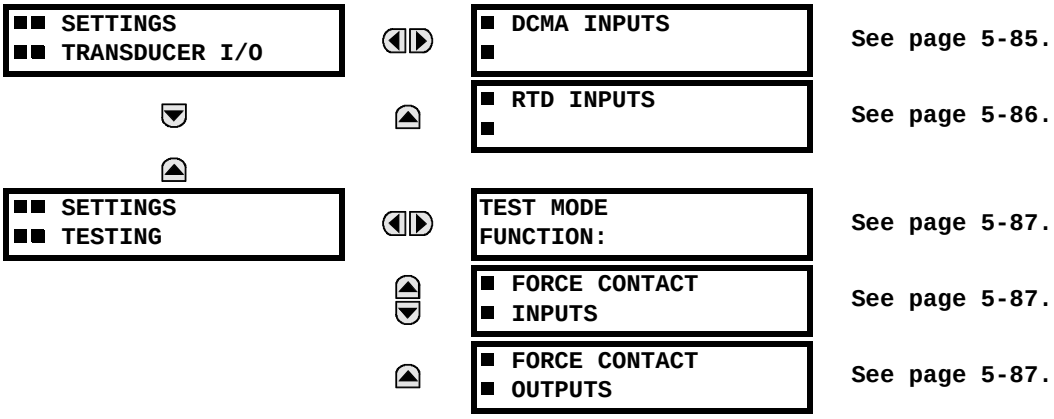

5.1.2 INTRODUCTION TO ELEMENTS

In the design of UR relays, the term “element” is used to describe a feature that is based around a comparator. The comparator is provided with an input (or set of inputs) that is tested against a programmed setting (or group of settings) to determine if the input is within the defined range that will set the output to logic 1, also referred to as “setting the flag”. A single comparator may make multiple tests and provide multiple outputs; for example, the time overcurrent comparator sets a Pickup flag when the current input is above the setting and sets an Operate flag when the input current has been at a level above the pickup setting for the time specified by the time-current curve settings. All comparators, except the Digital Element which uses a logic state as the input, use analog parameter actual values as the input.

Elements are arranged into two classes, GROUPED and CONTROL. Each element classed as a GROUPED element is provided with eight alternate sets of settings, in setting groups numbered 1 through 8. The performance of a GROUPED element is defined by the setting group that is active at a given time. The performance of a CONTROL element is independent of the selected active setting group.

The main characteristics of an element are shown on the element scheme logic diagram. This includes the input(s), settings, fixed logic, and the output operands that are generated (abbreviations used on scheme logic diagrams are defined in Appendix F).

Some settings for current and voltage elements are specified in per-unit (pu) calculated quantities:

pu quantity = (actual quantity) / (base quantity)

- For current elements, the ‘base quantity’ is the nominal secondary or primary current of the CT. Where the current source is the sum of two CTs with different ratios, the ‘base quantity’ will be the common secondary or primary current to which the sum is scaled (i.e. normalized to the larger of the 2 rated CT inputs). For example, if CT1 = 300 / 5 A and CT2 = 100 / 5 A, then in order to sum these, CT2 is scaled to the CT1 ratio. In this case, the ‘base quantity’ will be 5 A secondary or 300 A primary.
- For voltage elements, the ‘base quantity’ is the nominal secondary or primary voltage of the VT.

Some settings are common to most elements and are discussed below:

FUNCTION Setting

This setting programs the element to be operational when selected as "Enabled". The factory default is "Disabled". Once programmed to "Enabled", any element associated with the Function becomes active and all options become available.

NAME Setting

This setting is used to uniquely identify the element.

SOURCE Setting

This setting is used to select the parameter or set of parameters to be monitored.

PICKUP Setting

For simple elements, this setting is used to program the level of the measured parameter above or below which the pickup state is established. In more complex elements, a set of settings may be provided to define the range of the measured parameters which will cause the element to pickup.

PICKUP DELAY Setting

This setting sets a time-delay-on-pickup, or on-delay, for the duration between the Pickup and Operate output states.

RESET DELAY Setting

This setting is used to set a time-delay-on-dropout, or off-delay, for the duration between the Operate output state and the return to logic 0 after the input transits outside the defined pickup range.

BLOCK Setting

The default output operand state of all comparators is a logic 0 or “flag not set”. The comparator remains in this default state until a logic 1 is asserted at the RUN input, allowing the test to be performed. If the RUN input changes to logic 0 at any time, the comparator returns to the default state. The RUN input is used to supervise the comparator. The BLOCK input is used as one of the inputs to RUN control.

TARGET Setting

This setting is used to define the operation of an element target message. When set to Disabled, no target message or illumination of a faceplate LED indicator is issued upon operation of the element. When set to Self-Reset, the target message and LED indication follow the Operate state of the element, and self-resets once the operate element condition clears. When set to Latched, the target message and LED indication will remain visible after the element output returns to logic 0 - until a RESET command is received by the relay.

EVENTS Setting

This setting is used to control whether the Pickup, Dropout or Operate states are recorded by the event recorder. When set to Disabled, element pickup, dropout or operate are not recorded as events.

When set to Enabled, an event is created for:

- (Element) PKP (pickup)
- (Element) DPO (dropout)
- (Element) OP (operate)

The DPO event is created when the measure and decide comparator output transits from the pickup state (logic 1) to the dropout state (logic 0). This could happen when the element is in the operate state if the reset delay time is not ‘0’.

5.1.3 INTRODUCTION TO AC SOURCES

a) BACKGROUND

The F35 may be used on systems with breaker-and-a-half or ring bus configurations. In these applications, each of the two three-phase sets of individual phase currents (one associated with each breaker) can be used as an input to a breaker failure element. The sum of both breaker phase currents and 3I_0 residual currents may be required for the circuit relaying and metering functions. For a three-winding transformer application, it may be required to calculate watts and vars for each of three windings, using voltage from different sets of VTs. All these requirements can be satisfied with a single UR relay, equipped with sufficient CT and VT input channels, by selecting the parameter to be measured. A mechanism is provided to specify the AC parameter (or group of parameters) used as the input to protection/control comparators and some metering elements.

Selection of the parameter(s) to be measured is partially performed by the design of a measuring element or protection/control comparator, by identifying the type of parameter (fundamental frequency phasor, harmonic phasor, symmetrical component, total waveform RMS magnitude, phase-phase or phase-ground voltage, etc.) to be measured. The user completes the selection process by selecting the instrument transformer input channels to be used and some of the parameters calculated from these channels. The input parameters available include the summation of currents from multiple input channels. For the summed currents of phase, 3I_0 and ground current, current from CTs with different ratios are adjusted to a single ratio before the summation.

A mechanism called a "Source" configures the routing of input CT and VT channels to measurement sub-systems. Sources, in the context of the UR family of relays, refer to the logical grouping of current and voltage signals such that one Source contains all of the signals required to measure the load or fault in a particular power apparatus. A given Source may contain all or some of the following signals: three-phase currents, single-phase ground current, three-phase voltages and an auxiliary voltage from a single VT for checking for synchronism.

To illustrate the concept of Sources, as applied to current inputs only, consider the breaker-and-a-half scheme as illustrated in the following figure. In this application, the current flows as shown by the labeled arrows. Some current flows through the upper bus bar to some other location or power equipment, and some current flows into transformer winding 1. The current into winding 1 of the power transformer is the phasor sum (or difference) of the currents in CT1 and CT2 (whether the sum or difference is used, depends on the relative polarity of the CT connections). The same considerations apply to transformer winding 2. The protection elements need access to the net current for the protection of the transformer, but some elements may need access to the individual currents from CT1 and CT2.

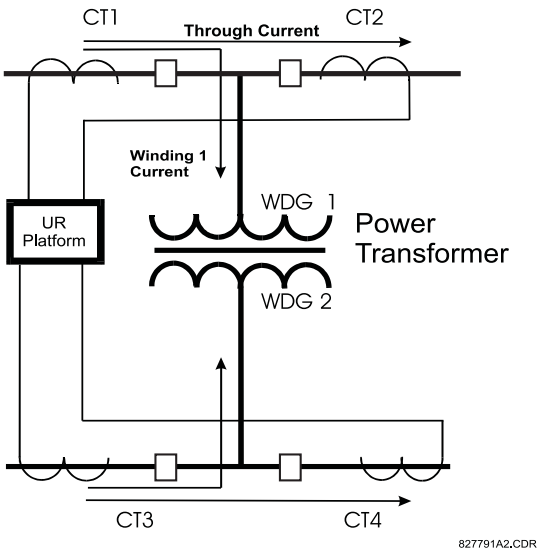

Figure 5–1: BREAKER-AND-A-HALF SCHEME

In conventional analog or electronic relays, the sum of the currents is obtained from an appropriate external connection of all the CTs through which any portion of the current for the element being protected could flow. Auxiliary CTs are required to perform ratio matching if the ratios of the primary CTs to be summed are not identical. In the UR platform, provisions have been included for all the current signals to be brought to the UR device where grouping, ratio correction and summation are applied internally via configuration settings.

A major advantage of using internal summation is that the individual currents are available to the protection device, as additional information to calculate a restraint current, for example, or to allow the provision of additional protection features that operate on the individual currents such as breaker failure.

Given the flexibility of this approach, it becomes necessary to add configuration settings to the platform to allow the user to select which sets of CT inputs will be added to form the net current into the protected device.

The internal grouping of current and voltage signals forms an internal Source. This Source can be given a specific name through the settings, and becomes available to protection and metering elements in the UR platform. Individual names can be given to each Source to help identify them more clearly for later use. For example, in the scheme shown in the BREAKER-AND-A-HALF SCHEME above, the user would configure one Source to be the sum of CT1 and CT2 and could name this Source as 'Wdg 1 Current'.

Once the Sources have been configured, the user has them available as selections for the choice of input signal for the protection elements and as metered quantities.

b) CT/VT MODULE CONFIGURATIONS

CT and VT input channels are contained in CT/VT modules in UR products. The type of input channel can be phase/neutral/other voltage, phase/ground current, or sensitive ground current. The CT/VT modules calculate total waveform RMS levels, fundamental frequency phasors, symmetrical components and harmonics for voltage or current, as allowed by the hardware in each channel. These modules may calculate other parameters as directed by the CPU module.

A CT/VT module can contain up to eight input channels numbered 1 through 8. The numbering of channels in a CT/VT module corresponds to the module terminal numbering of 1 through 8 and is arranged as follows; channels 1, 2, 3 and 4 are always provided as a group, hereafter called a "bank," and all four are either current or voltage, as are channels 5, 6, 7 and 8. Channels 1, 2, 3 and 5, 6, 7 are arranged as phase A, B and C respectively. Channels 4 and 8 are either another current or voltage.

Banks are ordered sequentially from the block of lower-numbered channels to the block of higher-numbered channels, and from the CT/VT module with the lowest slot position letter to the module with the highest slot position letter, as follows:

INCREASING SLOT POSITION LETTER -->		
CT/VT MODULE 1	**CT/VT MODULE 2**	**CT/VT MODULE 3**
< bank 1 >	< bank 3 >	< bank 5 >
< bank 2 >	< bank 4 >	< bank 6 >

The UR platform allows for a maximum of three sets of three-phase voltages and six sets of three-phase currents. The result of these restrictions leads to the maximum number of CT/VT modules in a chassis to three. The maximum number of Sources is six. A summary of CT/VT module configurations is shown below.

ITEM	MAXIMUM NUMBER
CT/VT Module	3
CT Bank (3 phase channels, 1 ground channel)	6
VT Bank (3 phase channels, 1 auxiliary channel)	3

c) CT/VT INPUT CHANNEL CONFIGURATION SETTINGS

5

Upon startup of the relay, configuration settings for every bank of current or voltage input channels in the relay are automatically generated, as determined from the order code. Within each bank, a channel identification label is automatically assigned to each bank of channels in a given product. The ‘bank’ naming convention is based on the physical location of the channels, required by the user to know how to connect the relay to external circuits. Bank identification consists of the letter designation of the slot in which the CT/VT module is mounted as the first character, followed by numbers indicating the channel, either 1 or 5.

For three-phase channel sets, the number of the lowest numbered channel identifies the set. For example, F1 represents the three-phase channel set of F1/F2/F3, where F is the slot letter and 1 is the first channel of the set of three channels.

Upon startup, the CPU configures the settings required to characterize the current and voltage inputs, and will display them in the appropriate section in the sequence of the banks (as described above) as shown below for a maximum configuration:

F1, F5, M1, M5, U1, U5.

The above section explains how the input channels are identified and configured to the specific application instrument transformers and the connections of these transformers. The specific parameters to be used by each measuring element and comparator, and some actual values are controlled by selecting a specific Source. The Source is a group of current and voltage input channels selected by the user to facilitate this selection. With this mechanism, a user does not have to make multiple selections of voltage and current for those elements that need both parameters, such as a distance element or a watt calculation. It also gathers associated parameters for display purposes.

The basic idea of arranging a Source is to select a point on the power system where information is of interest. An application example of the grouping of parameters in a Source is a transformer winding, on which a three phase voltage is measured, and the sum of the currents from CTs on each of two breakers is required to measure the winding current flow.

5.2.1 PASSWORD SECURITY

PATH: SETTINGS ⇨ PRODUCT SETUP ⇨ PASSWORD SECURITY

■ PASSWORD ■ SECURITY		ACCESS LEVEL: Restricted	*Range: Restricted, Command, Setting, Factory Service (for factory use only)*
	MESSAGE	CHANGE COMMAND PASSWORD: No	*Range: No, Yes*
	MESSAGE	CHANGE SETTING PASSWORD: No	*Range: No, Yes*
	MESSAGE	ENCRYPTED COMMAND PASSWORD: ----------	*Range: 0 to 9999999999* *Note: ---------- indicates no password*
	MESSAGE	ENCRYPTED SETTING PASSWORD: ----------	*Range: 0 to 9999999999* *Note: ---------- indicates no password*

The F35 provides two user levels of password security: Command and Setting. Operations under password supervision are as follows:

COMMAND:

- Changing the state of virtual inputs
- Clearing the event records
- Clearing the oscillography records

SETTING:

- Changing any setting.

The Command and Setting passwords are defaulted to "Null" when the relay is shipped from the factory. When a password is set to "Null", the password security feature is disabled.

Programming a password code is required to enable each access level. A password consists of 1 to 10 numerical characters. When a **CHANGE ... PASSWORD** setting is set to "Yes", the following message sequence is invoked:

1. ENTER NEW PASSWORD: _____
2. VERIFY NEW PASSWORD: _____
3. NEW PASSWORD HAS BEEN STORED

To gain write access to a "Restricted" setting, set **ACCESS LEVEL** to "Setting" and then change the setting, or attempt to change the setting and follow the prompt to enter the programmed password. If the password is correctly entered, access will be allowed. If no keys are pressed for longer than 30 minutes or control power is cycled, accessibility will automatically revert to the "Restricted" level.

If an entered password is lost (or forgotten), consult the factory service department with the corresponding **ENCRYPTED PASSWORD**.

NOTE **If the SETTING password and COMMAND password are set the same, the one password will allow access to commands and settings.**

5.2.2 DISPLAY PROPERTIES

PATH: SETTINGS ⇨ PRODUCT SETUP ⇨⇩ DISPLAY PROPERTIES

```
■ DISPLAY
■ PROPERTIES
```

```
FLASH MESSAGE
TIME:  1.0 s
```

Range: 0.5 to 10.0 s in steps of 0.1

MESSAGE

```
DEFAULT MESSAGE
TIMEOUT: 300 s
```

Range: 10 to 900 s in steps of 1

MESSAGE

```
DEFAULT MESSAGE
INTENSITY: 25 %
```

Range: 25%, 50%, 75%, 100%

Some relay messaging characteristics can be modified to suit different situations using the display properties settings.

Flash messages are status, warning, error, or information messages displayed for several seconds in response to certain key presses during setting programming. These messages override any normal messages. The time a flash message remains on the display can be changed to accommodate different reading rates. If no keys are pressed for a period of time, the relay automatically displays a default message. This time can be modified to ensure messages remain on the screen long enough during programming or reading of actual values.

To extend the life of the phosphor in the vacuum fluorescent display, the brightness can be attenuated when displaying default messages. When interacting with the display using the keypad, the display always operates at full brightness.

5.2.3 COMMUNICATIONS

5

a) SERIAL PORTS

PATH: SETTINGS ⇨ PRODUCT SETUP ⇨⇩ COMMUNICATIONS ⇨ SERIAL PORTS

```
■ COMMUNICATIONS
■
```

```
■ SERIAL PORTS
■
```

MESSAGE

```
RS485 COM1 BAUD
RATE: 19200
```

Range: 300, 1200, 2400, 4800, 9600, 14400, 19200, 28800, 33600, 38400, 57600, 115200. Only active if CPU 9A is ordered.

MESSAGE

```
RS485 COM1 PARITY:
None
```

Range: None, Odd, Even
Only active if CPU Type 9A is ordered

MESSAGE

```
RS485 COM1 RESPONSE
MIN TIME:    0 ms
```

Range: 0 to 1000 ms in steps of 10
Only active if CPU Type 9A is ordered

MESSAGE

```
RS485 COM2 BAUD
RATE: 19200
```

Range: 300, 1200, 2400, 4800, 9600, 14400, 19200, 28800, 33600, 38400, 57600, 115200

MESSAGE

```
RS485 COM2 PARITY:
None
```

Range: None, Odd, Even

MESSAGE

```
RS485 COM2 RESPONSE
MIN TIME:    0 ms
```

Range: 0 to 1000 ms in steps of 10

The F35 is equipped with up to 3 independent serial communication ports. The faceplate RS232 port is intended for local use and has fixed parameters of 19200 baud and no parity. The rear COM1 port type will depend on the CPU ordered: it may be either an Ethernet or an RS485 port. The rear COM2 port is RS485. The RS485 ports have settings for baud rate and parity. It is important that these parameters agree with the settings used on the computer or other equipment that is connected to these ports. Any of these ports may be connected to a personal computer running URPC. This software is used for downloading or uploading setting files, viewing measured parameters, and upgrading the relay firmware to the latest version. A maximum of 32 relays can be daisy-chained and connected to a DCS, PLC or PC using the RS485 ports.

NOTE

For each RS485 port, the minimum time before the port will transmit after receiving data from a host can be set. This feature allows operation with hosts which hold the RS485 transmitter active for some time after each transmission.

b) NETWORK

PATH: SETTINGS ⇨ PRODUCT SETUP ⇨⇩ COMMUNICATIONS ⇨⇩ NETWORK

```
■ COMMUNICATIONS
■
```

```
■ NETWORK
■
```

MESSAGE	IP ADDRESS: 0.0.0.0	*Range: Standard IP address format. Only active if CPU Type 9C or 9D is ordered.*
MESSAGE	SUBNET IP MASK: 0.0.0.0	*Range: Standard IP address format. Only active if CPU Type 9C or 9D is ordered.*
MESSAGE	GATEWAY IP ADDRESS: 0.0.0.0	*Range: Standard IP address format. Only active if CPU Type 9C or 9D is ordered.*
MESSAGE	■ OSI NETWORK ■ ADDRESS (NSAP)	*Note: Press the MESSAGE ⇨ key to enter the OSI NETWORK ADDRESS. Only active if CPU Type 9C or 9D is ordered.*
MESSAGE	ETHERNET OPERATION MODE: Half-Duplex	*Range: Half-Duplex, Full-Duplex. Only active if CPU Type 9C or 9D is ordered.*
MESSAGE	ETHERNET PRI LINK MONITOR: Disabled	*Range: Disabled, Enabled. Only active if CPU Type 9C or 9D is ordered.*
MESSAGE	ETHERNET SEC LINK MONITOR: Disabled	*Range: Disabled, Enabled. Only active if CPU Type 9C or 9D is ordered.*

The Network setting messages will appear only if the UR is ordered with an Ethernet card. The Ethernet Primary and Secondary Link Monitor settings allow internal self test targets to be triggered when either the Primary or Secondary ethernet fibre link status indicates a connection loss. The IP addresses are used with DNP/Network, Modbus/TCP, MMS/UCA2, IEC 60870-5-104, TFTP, and HTTP (web server) protocols. The NSAP address is used with the MMS/UCA2 protocol over the OSI (CLNP/TP4) stack only. Each network protocol has a setting for the **TCP/UDP PORT NUMBER**. These settings are used only in advanced network configurations. They should normally be left at their default values, but may be changed if required; for example, to allow access to multiple URs behind a router. By setting a different TCP/UCP Port Number for a given protocol on each UR, the router can map the URs to the same external IP address. The client software (URPC, for example) must be configured to use the correct port number if these settings are used.

WARNING

Do not set more than one protocol to use the same TCP/UDP Port Number, as this will result in unreliable operation of those protocols.

NOTE

When the NSAP address, any TCP/UDP Port Number, or any User Map setting (when used with DNP) is changed, it will not become active until power to the relay has been cycled (OFF/ON).

c) MODBUS PROTOCOL

PATH: SETTINGS ⇨ PRODUCT SETUP ⇨⇩ COMMUNICATIONS ⇨⇩ MODBUS PROTOCOL

```
■ COMMUNICATIONS
■
```

```
■ MODBUS PROTOCOL
■
```

MESSAGE	◀▶	MODBUS SLAVE ADDRESS: 254	*Range: 1 to 254 in steps of 1*
MESSAGE	▲	MODBUS TCP PORT NUMBER: 502	*Range: 1 to 65535 in steps of 1*

The serial communication ports utilize the Modbus protocol, unless configured for DNP operation (see DNP PROTOCOL below). This allows the URPC program to be used. UR relays operate as Modbus slave devices only. When using Modbus protocol on the RS232 port, the F35 will respond regardless of the **MODBUS SLAVE ADDRESS** programmed. For the RS485 ports each F35 must have a unique address from 1 to 254. Address 0 is the broadcast address which all Modbus slave devices listen to. Addresses do not have to be sequential, but no two devices can have the same address or conflicts resulting in errors will occur. Generally, each device added to the link should use the next higher address starting at 1. Refer to Appendix B for more information on the Modbus protocol.

d) DNP PROTOCOL

PATH: SETTINGS ⇨ PRODUCT SETUP ⇨⇩ COMMUNICATIONS ⇨⇩ DNP PROTOCOL

5

```
■ COMMUNICATIONS
■
```

```
■ DNP PROTOCOL
■
```

MESSAGE	◀▶	DNP PORT: NONE	*Range: NONE, COM1 - RS485, COM2 - RS485, FRONT PANEL - RS232, NETWORK*
MESSAGE	▲▼	DNP ADDRESS: 255	*Range: 0 to 65519 in steps of 1*
MESSAGE	▲▼	■ DNP NETWORK ■ CLIENT ADDRESSES	*Note: Press the MESSAGE ⇨ key to enter the DNP NETWORK CLIENT ADDRESSES*
MESSAGE	▲▼	DNP TCP/UDP PORT NUMBER: 20000	*Range: 1 to 65535 in steps of 1*
MESSAGE	▲▼	DNP UNSOL RESPONSE FUNCTION: Disabled	*Range: Enabled, Disabled*
MESSAGE	▲▼	DNP UNSOL RESPONSE TIMEOUT: 5 s	*Range: 0 to 60 s in steps of 1*
MESSAGE	▲▼	DNP UNSOL RESPONSE MAX RETRIES: 10	*Range: 1 to 255 in steps of 1*
MESSAGE	▲▼	DNP UNSOL RESPONSE DEST ADDRESS: 1	*Range: 0 to 65519 in steps of 1*
MESSAGE	▲▼	USER MAP FOR DNP ANALOGS: Disabled	*Range: Enabled, Disabled*
MESSAGE	▲▼	NUMBER OF SOURCES IN ANALOG LIST: 1	*Range: 1 to 6 in steps of 1*

MESSAGE	DNP CURRENT SCALE FACTOR: 1	Range: 0.01. 0.1, 1, 10, 100, 1000
MESSAGE	DNP VOLTAGE SCALE FACTOR: 1	Range: 0.01. 0.1, 1, 10, 100, 1000
MESSAGE	DNP CURRENT SCALE FACTOR: 1	Range: 0.01. 0.1, 1, 10, 100, 1000
MESSAGE	DNP POWER SCALE FACTOR: 1	Range: 0.01. 0.1, 1, 10, 100, 1000
MESSAGE	DNP ENERGY SCALE FACTOR: 1	Range: 0.01. 0.1, 1, 10, 100, 1000
MESSAGE	DNP OTHER SCALE FACTOR: 1	Range: 0.01. 0.1, 1, 10, 100, 1000
MESSAGE	DNP CURRENT DEFAULT DEADBAND: 30000	Range: 0 to 65535 in steps of 1
MESSAGE	DNP VOLTAGE DEFAULT DEADBAND: 30000	Range: 0 to 65535 in steps of 1
MESSAGE	DNP POWER DEFAULT DEADBAND: 30000	Range: 0 to 65535 in steps of 1
MESSAGE	DNP ENERGY DEFAULT DEADBAND: 30000	Range: 0 to 65535 in steps of 1
MESSAGE	DNP OTHER DEFAULT DEADBAND: 30000	Range: 0 to 65535 in steps of 1
MESSAGE	DNP TIME SYNC IIN PERIOD: 1440 min	Range: 1 to 10080 min. in steps of 1
MESSAGE	DNP MESSAGE FRAGMENT SIZE: 240	Range: 30 to 2048 in steps of 1
MESSAGE	■ DNP BINARY INPUTS ■ USER MAP	

The F35 supports the Distributed Network Protocol (DNP) version 3.0. The F35 can be used as a DNP slave device connected to a single DNP master (usually either an RTU or a SCADA master station). Since the F35 maintains one set of DNP data change buffers and connection information, only one DNP master should actively communicate with the F35 at one time. The DNP PORT setting is used to select the communications port assigned to the DNP protocol. DNP can be assigned to a single port only. Once DNP is assigned to a serial port, the Modbus protocol is disabled on that port. Note that COM1 can be used only in non-ethernet UR relays. When this setting is set to NETWORK, the DNP protocol can be used over either TCP/IP or UDP/IP. Refer to Appendix E for more information on the DNP protocol.

The **DNP ADDRESS** setting is the DNP slave address. This number identifies the F35 on a DNP communications link. Each DNP slave should be assigned a unique address.

The **DNP NETWORK CLIENT ADDRESS** settings can force the F35 to respond to a maximum of five specific DNP masters.

The **DNP UNSOL RESPONSE FUNCTION** should be set to "Disabled" for RS485 applications since there is no collision avoidance mechanism.

The **DNP UNSOL RESPONSE TIMEOUT** sets the time the F35 waits for a DNP master to confirm an unsolicited response.

The **DNP UNSOL RESPONSE MAX RETRIES** setting determines the number of times the F35 will retransmit an unsolicited response without receiving a confirmation from the master. A value of 255 allows infinite re-tries.

The **DNP UNSOL RESPONSE DEST ADDRESS** setting is the DNP address to which all unsolicited responses are sent. The IP address to which unsolicited responses are sent is determined by the F35 from either the current DNP TCP connection or the most recent UDP message.

The **USER MAP FOR DNP ANALOGS** setting allows the large pre-defined Analog Inputs points list to be replaced by the much smaller Modbus User Map. This can be useful for users wishing to read only selected Analog Input points from the F35. See Appendix E for more information

The **NUMBER OF SOURCES IN ANALOG LIST** setting allows the selection of the number of current/voltage source values that are included in the Analog Inputs points list. This allows the list to be customized to contain data for only the sources that are configured. This setting is relevant only when the User Map is not used.

The **DNP SCALE FACTOR** settings are numbers used to scale Analog Input point values. These settings group the F35 Analog Input data into types: current, voltage, power, energy, and other. Each setting represents the scale factor for all Analog Input points of that type. For example, if the **DNP VOLTAGE SCALE FACTOR** setting is set to a value of 1000, all DNP Analog Input points that are voltages will be returned with values 1000 times smaller (e.g. a value of 72000 V on the F35 will be returned as 72). These settings are useful when Analog Input values must be adjusted to fit within certain ranges in DNP masters. Note that a scale factor of 0.1 is equivalent to a multiplier of 10 (i.e. the value will be 10 times larger).

The **DNP DEFAULT DEADBAND** settings are the values used by the F35 to determine when to trigger unsolicited responses containing Analog Input data. These settings group the F35 Analog Input data into types: current, voltage, power, energy, and other. Each setting represents the default deadband value for all Analog Input points of that type. For example, in order to trigger unsolicited responses from the F35 when any current values change by 15 A, the **DNP CURRENT DEFAULT DEADBAND** setting should be set to 15. Note that these settings are the default values of the deadbands. DNP object 34 points can be used to change deadband values, from the default, for each individual DNP Analog Input point. Whenever power is removed and re-applied to the F35, the default deadbands will be in effect.

The **DNP TIME SYNC IIN PERIOD** setting determines how often the "Need Time" Internal Indication (IIN) bit is set by the F35. Changing this time allows the DNP master to send time synchronization commands more or less often, as required.

The **DNP MESSAGE FRAGMENT SIZE** setting determines the size, in bytes, at which message fragmentation occurs. Large fragment sizes allow for more efficient throughput; smaller fragment sizes cause more application layer confirmations to be necessary which can provide for more robust data transfer over noisy communication channels.

The **DNP BINARY INPUTS USER MAP** setting allows for the creation of a custom DNP Binary Inputs points list. The default DNP Binary Inputs list on the F35 contains 928 points representing various binary states (contact inputs and outputs, virtual inputs and outputs, protection element states, etc.). If not all of these points are required in the DNP master, a custom Binary Inputs points list can be created by selecting up to 58 blocks of 16 points. Each block represents 16 Binary Input points. Block 1 represents Binary Input points 0 to 15, block 2 represents Binary Input points 16 to 31, block 3 represents Binary Input points 32 to 47, etc. The minimum number of Binary Input points that can be selected is 16 (1 block). If all of the **BIN INPUT BLOCK X** settings are set to "Not Used", the standard list of 928 points will be in effect. The F35 will form the Binary Inputs points list from the **BIN INPUT BLOCK X** settings up to the first occurrence of a setting value of "Not Used".

NOTE

When using either of the User Maps for DNP data points (Analog Inputs and/or Binary Inputs), for UR relays with the ethernet option installed, check the "DNP Points Lists" F35 web page to ensure the desired points lists have been created. This web page can be viewed using Internet Explorer or Netscape Navigator by entering the F35 IP address to access the F35 "Main Menu", then by selecting the "Device Information Menu", and then selecting the "DNP Points Lists".

e) UCA/MMS PROTCOL

PATH: SETTINGS ⇨ PRODUCT SETUP ⇨⇩ COMMUNICATIONS ⇨⇩ UCA/MMS PROTOCOL

```
■ COMMUNICATIONS
■
```

```
■ UCA/MMS PROTOCOL
■
```

MESSAGE

```
DEFAULT GOOSE UPDATE
TIME: 60 s
```

Range: 1 to 60 s in steps of 1
See UserSt BIT PAIRS in the REMOTE OUTPUTS section.

MESSAGE

```
UCA LOGICAL DEVICE:
UCADevice
```

Range: Up to 16 alphanumeric characters representing the name of the UCA logical device.

MESSAGE

```
UCA/MMS TCP PORT
NUMBER:   102
```

Range: 1 to 65535 in steps of 1

The F35 supports the Manufacturing Message Specification (MMS) protocol as specified by the Utility Communication Architecture (UCA). UCA/MMS is supported over two protocol stacks: TCP/IP over ethernet and TP4/CLNP (OSI) over ethernet. The F35 operates as a UCA/MMS server. Appendix C describes the UCA/MMS protocol implementation in more detail. The REMOTE INPUTS and REMOTE OUTPUT sections of Chapter 5: SETTINGS describes the peer-to-peer GOOSE message scheme.

The UCA LOGICAL DEVICE setting represents the name of the MMS domain (UCA logical device) in which all UCA objects are located.

f) WEB SERVER HTTP PROTOCOL

PATH: SETTINGS ⇨ PRODUCT SETUP ⇨⇩ COMMUNICATIONS ⇨⇩ WEB SERVER HTTP PROTOCOL

```
■ COMMUNICATIONS
■
```

```
■ WEB SERVER
■ HTTP PROTOCOL
```

MESSAGE

```
HTTP TCP PORT
NUMBER:     80
```

Range: 1 to 65535 in steps of 1

The F35 contains an embedded web server. That is, the F35 is capable of transferring web pages to a web browser such as Microsoft Internet Explorer or Netscape Navigator. This feature is available only if the F35 has the ethernet option installed. The web pages are organized as a series of menus that can be accessed starting at the F35 "Main Menu". Web pages are available showing DNP and IEC 60870-5-104 points lists, Modbus registers, Event Records, Fault Reports, etc. The web pages can be accessed by connecting the UR and a computer to an ethernet network. The Main Menu will be displayed in the web browser on the computer simply by entering the IP address of the F35 into the "Address" box on the web browser.

g) TFTP PROTOCOL

PATH: SETTINGS ⇨ PRODUCT SETUP ⇨⇩ COMMUNICATIONS ⇨⇩ TFTP PROTOCOL

```
■ COMMUNICATIONS
■
```

```
■ TFTP PROTOCOL
■
```

MESSAGE

```
TFTP MAIN UDP PORT
NUMBER:     69
```

Range: 1 to 65535 in steps of 1

MESSAGE

```
TFTP DATA UDP PORT 1
NUMBER:     0
```

Range: 0 to 65535 in steps of 1

MESSAGE

```
TFTP DATA UDP PORT 2
NUMBER:     0
```

Range: 0 to 65535 in steps of 1

The Trivial File Transfer Protocol (TFTP) can be used to transfer files from the UR over a network. The F35 operates as a TFTP server. TFTP client software is available from various sources, including Microsoft Windows NT. The file "dir.txt" is an ASCII text file that can be transferred from the F35. This file contains a list and description of all the files available from the UR (event records, oscillography, etc.).

h) IEC 60870-5-104 PROTOCOL

PATH: SETTINGS ⇨ PRODUCT SETUP ⇨⇩ COMMUNICATIONS ⇨⇩ IEC 60870-5-104 PROTOCOL

```
■ COMMUNICATIONS
■
```

```
■ IEC 60870-5-104
■ PROTOCOL
```

MESSAGE	IEC 60870-5-104 FUNCTION: Disabled	*Range: Enabled, Disabled*
MESSAGE	IEC TCP PORT NUMBER: 2404	*Range: 1 to 65535 in steps of 1*
MESSAGE	IEC COMMON ADDRESS OF ASDU: 0	*Range: 0 to 65535 in steps of 1*
MESSAGE	IEC CYCLIC DATA PERIOD: 60 s	*Range: 1 to 65535 s in steps of 1*
MESSAGE	NUMBER OF SOURCES IN MMENC1 LIST: 1	*Range: 1 to 6 in steps of 1*
MESSAGE	IEC CURRENT DEFAULT THRESHOLD: 30	*Range: 0 to 65535 in steps of 1*
MESSAGE	IEC VOLTAGE DEFAULT THRESHOLD: 30000	*Range: 0 to 65535 in steps of 1*
MESSAGE	IEC POWER DEFAULT THRESHOLD: 30000	*Range: 0 to 65535 in steps of 1*
MESSAGE	IEC ENERGY DEFAULT THRESHOLD: 30000	*Range: 0 to 65535 in steps of 1*
MESSAGE	IEC OTHER DEFAULT THRESHOLD: 30000	*Range: 0 to 65535 in steps of 1*

The F35 supports the IEC 60870-5-104 protocol. The F35 can be used as an IEC 60870-5-104 slave device connected to a single master (usually either an RTU or a SCADA master station). Since the F35 maintains one set of IEC 60870-5-104 data change buffers, only one master should actively communicate with the F35 at one time. For situations where a second master is active in a "hot standby" configuration, the UR supports a second IEC 60870-5-104 connection providing the standby master sends only IEC 60870-5-104 Test Frame Activation messages for as long as the primary master is active.

The **NUMBER OF SOURCES IN MMENC1 LIST** setting allows the selection of the number of current/voltage source values that are included in the M_ME_NC_1 (Measured value, short floating point) Analog points list. This allows the list to be customized to contain data for only the sources that are configured.

The **IEC ------- DEFAULT THRESHOLD** settings are the values used by the UR to determine when to trigger spontaneous responses containing M_ME_NC_1 analog data. These settings group the UR analog data into types: current, voltage, power, energy, and other. Each setting represents the default threshold value for all M_ME_NC_1 analog points of that type. For example, in order to trigger spontaneous responses from the UR when any current values change by 15 A, the **IEC CURRENT DEFAULT THRESHOLD** setting should be set to 15. Note that these settings are the default values of the deadbands. P_ME_NC_1 (Parameter of measured value, short floating point value) points can be used to change threshold values, from the default, for each individual M_ME_NC_1 analog point. Whenever power is removed and re-applied to the UR, the default thresholds will be in effect.

NOTE **The IEC 60870-5-104 and DNP protocols can not be used at the same time. When the IEC 60870-5-104 FUNCTION setting is set to Enabled, the DNP protocol will not be operational. When this setting is changed it will not become active until power to the relay has been cycled (OFF/ON).**

5.2.4 MODBUS USER MAP

PATH: SETTINGS ⇨ PRODUCT SETUP ⇨⇩ MODBUS USER MAP

```
■ MODBUS USER MAP
■
```

```
ADDRESS   1:     0
VALUE:     0
```

Range: 0 to 65535 in steps of 1

↓

MESSAGE ⇧

```
ADDRESS 256:     0
VALUE:     0
```

Range: 0 to 65535 in steps of 1

The Modbus® User Map provides up to 256 registers with read only access. To obtain a value for a memory map address, enter the desired location in the **ADDRESS** line (the value must be converted from hex to decimal format). The corresponding value from the is displayed in the **VALUE** line. A value of “0” in subsequent register **ADDRESS** lines automatically return values for the previous **ADDRESS** lines incremented by “1”. An address value of “0” in the initial register means “none” and values of “0” will be displayed for all registers.

Different **ADDRESS** values can be entered as required in any of the register positions.

NOTE **These settings can also be used with the DNP protocol. See the DNP ANALOG INPUT POINTS section in Appendix E for details.**

5.2.5 REAL TIME CLOCK

PATH: SETTINGS ⇨ PRODUCT SETUP ⇨⇩ REAL TIME CLOCK

```
■ REAL TIME
■ CLOCK
```

```
IRIG-B SIGNAL TYPE:
None
```

Range: None, DC Shift, Amplitude Modulated

The date and time for the relay clock can be synchronized to other relays using an IRIG-B signal. It has the same accuracy as an electronic watch, approximately ±1 minute per month.

An IRIG-B signal may be connected to the relay to synchronize the clock to a known time base and to other relays. If an IRIG-B signal is used, only the current year needs to be entered.

See also the **COMMANDS ⇩ SET DATE AND TIME** menu for manually setting the relay clock.

5.2.6 OSCILLOGRAPHY

PATH: SETTINGS ⇨ PRODUCT SETUP ⇨⇩ OSCILLOGRAPHY

```
■ OSCILLOGRAPHY
■
```

```
NUMBER OF RECORDS:
15
```
Range: 1 to 64 in steps of 1

```
TRIGGER MODE:
Automatic Overwrite
```
Range: Automatic Overwrite, Protected

```
TRIGGER POSITION:
 50%
```
Range: 0 to 100 in steps of 1

```
TRIGGER SOURCE:
Off
```
Range: FlexLogic™ operand

```
AC INPUT WAVEFORMS:
16 samples/cycle
```
Range: Off; 8, 16, 32, 64 samples/cycle

```
■ DIGITAL CHANNELS
■
```
Range: 2 to 63 channels

```
DIGITAL CHANNEL 2:
Off
```
Range: FlexLogic™ operand

↓

```
DIGITAL CHANNEL 63:
Off
```
Range: FlexLogic™ operand

```
■ ANALOG CHANNELS
■
```
Range: 1 to 16 channels

```
ANALOG CHANNEL 1:
Off
```
Range: Off, any analog Actual Value parameter

↓

```
ANALOG CHANNEL 16:
Off
```
Range: Off, any analog Actual Value parameter

Oscillography records contain waveforms captured at the sampling rate as well as other relay data at the point of trigger. Oscillography records are triggered by a programmable FlexLogic™ operand. Multiple oscillography records may be captured simultaneously.

The **NUMBER OF RECORDS** is selectable, but the number of cycles captured in a single record varies considerably based on other factors such as sample rate and the number of operational CT/VT modules. There is a fixed amount of data storage for oscillography; the more data captured, the less the number of cycles captured per record. See the **ACTUAL VALUES** ⇨⇩

RECORDS ⇨⇩ OSCILLOGRAPHY menu to view the number of cycles captured per record. The following table provides sample configurations with corresponding cycles/record.

Table 5–1: OSCILLOGRAPHY CYCLES/RECORD EXAMPLE

# RECORDS	# CT/VTS	SAMPLE RATE	# DIGITALS	# ANALOGS	CYCLES/ RECORD
1	1	8	0	0	1872.0
1	1	16	16	0	1685.0
8	1	16	16	0	266.0
8	1	16	16	4	219.5
8	2	16	16	4	93.5
8	2	16	64	16	93.5
8	2	32	64	16	57.6
8	2	64	64	16	32.3
32	2	64	64	16	9.5

A new record may automatically overwrite an older record if **TRIGGER MODE** is set to "Automatic Overwrite".

The **TRIGGER POSITION** is programmable as a percent of the total buffer size (e.g. 10%, 50%, 75%, etc.). A trigger position of 25% consists of 25% pre- and 75% post-trigger data.

The **TRIGGER SOURCE** is always captured in oscillography and may be any FlexLogic™ parameter (element state, contact input, virtual output, etc.). The relay sampling rate is 64 samples per cycle.

The **AC INPUT WAVEFORMS** setting determines the sampling rate at which AC input signals (i.e. current and voltage) are stored. Reducing the sampling rate allows longer records to be stored. This setting has no effect on the internal sampling rate of the relay which is always 64 samples per cycle, i.e. it has no effect on the fundamental calculations of the device.

An **ANALOG CHANNEL** setting selects the metering actual value recorded in an oscillography trace. The length of each oscillography trace depends in part on the number of parameters selected here. Parameters set to ‘Off’ are ignored. The parameters available in a given relay are dependent on: (a) the type of relay, (b) the type and number of CT/VT hardware modules installed, and (c) the type and number of Analog Input hardware modules installed. Upon startup, the relay will automatically prepare the parameter list. Tables of all possible analog metering actual value parameters are presented in Appendix A: FLEXANALOG PARAMETERS. The parameter index number shown in any of the tables is used to expedite the selection of the parameter on the relay display. It can be quite time-consuming to scan through the list of parameters via the relay keypad/display - entering this number via the relay keypad will cause the corresponding parameter to be displayed.

All eight CT/VT module channels are stored in the oscillography file. The CT/VT module channels are named as follows:

<slot_letter><terminal_number>—<I or *V><phase A*, *B*, or *C*, or *4th input>*

The fourth current input in a bank is called IG, and the fourth voltage input in a bank is called VX. For example, F2-IB designates the IB signal on terminal 2 of the CT/VT module in slot F. If there are no CT/VT modules and Analog Input modules, no analog traces will appear in the file; only the digital traces will appear.

WARNING

When the NUMBER OF RECORDS setting is altered, all oscillography records will be CLEARED.

5.2.7 DATA LOGGER

PATH: SETTINGS ⇨⇩ PRODUCT SETUP ⇨⇩ DATA LOGGER

```
■ DATA LOGGER
■
```

```
DATA LOGGER RATE:
1 min
```

Range: 1 sec; 1 min, 5 min, 10 min, 15 min, 20 min, 30 min, 60 min

MESSAGE

```
DATA LOGGER CHNL  1:
Off
```

Range: Off, any analog Actual Value parameter

MESSAGE

```
DATA LOGGER CHNL  2:
Off
```

Range: Off, any analog Actual Value parameter

↓

MESSAGE

```
DATA LOGGER CHNL 16:
Off
```

Range: Off, any analog Actual Value parameter

MESSAGE

```
DATA LOGGER CONFIG:
 0 CHNL x   0.0 DAYS
```

Range: Not applicable - shows computed data only

The data logger samples and records up to 16 analog parameters at a user-defined sampling rate. This recorded data may be downloaded to the URPC software and displayed with ‘parameters’ on the vertical axis and ‘time’ on the horizontal axis. All data is stored in non-volatile memory, meaning that the information is retained when power to the relay is lost.

For a fixed sampling rate, the data logger can be configured with a few channels over a long period or a larger number of channels for a shorter period. The relay automatically partitions the available memory between the channels in use.

5

NOTE **Changing any setting affecting Data Logger operation will clear any data that is currently in the log.**

DATA LOGGER RATE:

This setting selects the time interval at which the actual value data will be recorded.

DATA LOGGER CHNL 1 (to 16):

This setting selects the metering actual value that is to be recorded in Channel 1(16) of the data log. The parameters available in a given relay are dependent on: the type of relay, the type and number of CT/VT hardware modules installed, and the type and number of Analog Input hardware modules installed. Upon startup, the relay will automatically prepare the parameter list. Tables of all possible analog metering actual value parameters are presented in Appendix A: FLEXANALOG PARAMETERS. The parameter index number shown in any of the tables is used to expedite the selection of the parameter on the relay display. It can be quite time-consuming to scan through the list of parameters via the relay keypad/display – entering this number via the relay keypad will cause the corresponding parameter to be displayed.

DATA LOGGER CONFIG:

This display presents the total amount of time the Data Logger can record the channels not selected to "Off" without overwriting old data.

5.2.8 DEMAND

PATH: SETTINGS ⇨ PRODUCT SETUP ⇨⇩ DEMAND

```
■ DEMAND
■
```

```
CRNT DEMAND METHOD:
Thermal Exponential
```

Range: Thermal Exponential, Block Interval, Rolling Demand

MESSAGE

```
POWER DEMAND METHOD:
Thermal Exponential
```

Range: Thermal Exponential, Block Interval, Rolling Demand

MESSAGE

```
DEMAND INTERVAL:
15 MIN
```

Range: 5, 10, 15, 20, 30, 60 minutes

MESSAGE

```
DEMAND TRIGGER:
Off
```

Range: FlexLogic™ operand
Note: for calculation using Method 2a

The relay measures current demand on each phase, and three-phase demand for real, reactive, and apparent power. Current and Power methods can be chosen separately for the convenience of the user. Settings are provided to allow the user to emulate some common electrical utility demand measuring techniques, for statistical or control purposes. If the **CRNT DEMAND METHOD** is set to "Block Interval" and the **DEMAND TRIGGER** is set to “Off”, Method 2 is used (see below). If **DEMAND TRIGGER** is assigned to any other FlexLogic™ operand, Method 2a is used (see below).

The relay can be set to calculate demand by any of three methods as described below:

CALCULATION METHOD 1: THERMAL EXPONENTIAL

This method emulates the action of an analog peak recording thermal demand meter. The relay measures the quantity (RMS current, real power, reactive power, or apparent power) on each phase every second, and assumes the circuit quantity remains at this value until updated by the next measurement. It calculates the 'thermal demand equivalent' based on the following equation:

$d(t) = D(1 - e^{-kt})$ d = demand value after applying input quantity for time t (in minutes)
D = input quantity (constant)
k = 2.3 / thermal 90% response time.

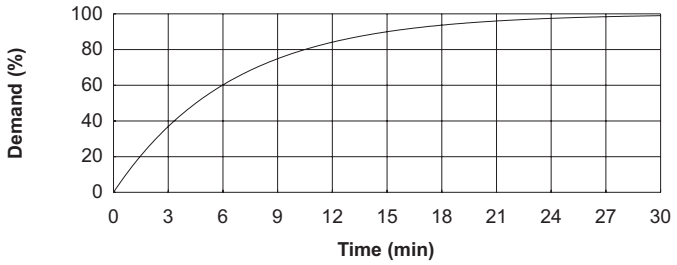

Figure 5–2: THERMAL DEMAND CHARACTERISTIC

See the 90% thermal response time characteristic of 15 minutes in the figure above. A setpoint establishes the time to reach 90% of a steady-state value, just as the response time of an analog instrument. A steady state value applied for twice the response time will indicate 99% of the value.

CALCULATION METHOD 2: BLOCK INTERVAL

This method calculates a linear average of the quantity (RMS current, real power, reactive power, or apparent power) over the programmed demand time interval, starting daily at 00:00:00 (i.e. 12:00 am). The 1440 minutes per day is divided into the number of blocks as set by the programmed time interval. Each new value of demand becomes available at the end of each time interval.

CALCULATION METHOD 2a: BLOCK INTERVAL (with Start Demand Interval Logic Trigger)

This method calculates a linear average of the quantity (RMS current, real power, reactive power, or apparent power) over the interval between successive Start Demand Interval logic input pulses. Each new value of demand becomes available at the end of each pulse. Assign a FlexLogic™ operand to the **DEMAND TRIGGER** setting to program the input for the new demand interval pulses.

NOTE

If no trigger is assigned in the **DEMAND TRIGGER** setting and the **CRNT DEMAND METHOD** is "Block Interval", use calculating method #2. If a trigger is assigned, the maximum allowed time between 2 trigger signals is 60 minutes. If no trigger signal appears within 60 minutes, demand calculations are performed and available and the algorithm resets and starts the new cycle of calculations. The minimum required time for trigger contact closure is 20 µs.

CALCULATION METHOD 3: ROLLING DEMAND

This method calculates a linear average of the quantity (RMS current, real power, reactive power, or apparent power) over the programmed demand time interval, in the same way as Block Interval. The value is updated every minute and indicates the demand over the time interval just preceding the time of update.

5.2.9 USER-PROGRAMMABLE LEDS

PATH: SETTINGS ⇨ PRODUCT SETUP ⇨⇩ USER-PROGRAMMABLE LEDS

```
■ USER-PROGRAMMABLE
■ LEDS

    ■ TRIP & ALARM
    ■ LEDS

        TRIP LED INPUT:
        OFF                    Range: FlexLogic™ operand

        ALARM LED INPUT:
        OFF                    Range: FlexLogic™ operand

    ■ USER-PROGRAMMABLE
    ■ LED 1

        LED 1 OPERAND:
        Off                    Range: FlexLogic™ operand

        LED 1 TYPE:
        Self-Reset             Range: Self-Reset, Latched

    ■ USER-PROGRAMMABLE
    ■ LED 2
            ↓
    ■ USER-PROGRAMMABLE
    ■ LED 48
```

The TRIP and ALARM LEDs are on LED panel 1. Each indicator can be programmed to become illuminated when the selected FlexLogic™ operand is in the logic 1 state. There are 48 amber LEDs across the relay faceplate LED panels. Each of these indicators can be programmed to illuminate when the selected FlexLogic™ operand is in the logic 1 state.

- LEDs 1 through 24 inclusive are on LED panel 2; LEDs 25 through 48 inclusive are on LED panel 3.

Refer to the LED INDICATORS section in the HUMAN INTERFACES chapter for the locations of these indexed LEDs. This menu selects the operands to control these LEDs. Support for applying user-customized labels to these LEDs is provided. If the **LED X TYPE** setting is "Self-Reset" (default setting), the LED illumination will track the state of the selected LED operand. If the **LED X TYPE** setting is 'Latched', the LED, once lit, remains so until reset by the faceplate RESET button, from a remote device via a communications channel, or from any programmed operand, even if the LED operand state de-asserts.

Table 5–4: RECOMMENDED SETTINGS FOR LED PANEL 2 LABELS

SETTING	PARAMETER
LED 1 Operand	SETTING GROUP ACT 1
LED 2 Operand	SETTING GROUP ACT 2
LED 3 Operand	SETTING GROUP ACT 3
LED 4 Operand	SETTING GROUP ACT 4
LED 5 Operand	SETTING GROUP ACT 5
LED 6 Operand	SETTING GROUP ACT 6
LED 7 Operand	SETTING GROUP ACT 7
LED 8 Operand	SETTING GROUP ACT 8
LED 9 Operand	BREAKER 1 OPEN
LED 10 Operand	BREAKER 1 CLOSED
LED 11 Operand	BREAKER 1 TROUBLE
LED 12 Operand	Off

SETTING	PARAMETER
LED 13 Operand	Off
LED 14 Operand	BREAKER 2 OPEN
LED 15 Operand	BREAKER 2 CLOSED
LED 16 Operand	BREAKER 2 TROUBLE
LED 17 Operand	SYNC 1 SYNC OP
LED 18 Operand	SYNC 2 SYNC OP
LED 19 Operand	Off
LED 20 Operand	Off
LED 21 Operand	AR ENABLED
LED 22 Operand	AR DISABLED
LED 23 Operand	AR RIP
LED 24 Operand	AR LO

Refer to the CONTROL OF SETTINGS GROUPS example in the CONTROL ELEMENTS section for group activation.

5.2.10 FLEX STATE PARAMETERS

PATH: SETTINGS ⇨ PRODUCT SETUP ⇨⇩ FLEX STATE PARAMETERS

```
■ FLEX STATE
■ PARAMETERS
```

```
PARAMETER    1:
Off
```

Range: FlexLogic™ Operand

MESSAGE

```
PARAMETER    2:
Off
```

Range: FlexLogic™ Operand

↓

MESSAGE

```
PARAMETER 256:
Off
```

Range: FlexLogic™ Operand

This feature provides a mechanism where any of 256 selected FlexLogic™ operand states can be used for efficient monitoring. The feature allows user-customized access to the FlexLogic™ operand states in the relay. The state bits are packed so that 16 states may be read out in a single Modbus register. The state bits can be configured so that all of the states which are of interest to the user are available in a minimum number of Modbus registers.

The state bits may be read out in the "Flex States" register array beginning at Modbus address 900 hex. 16 states are packed into each register, with the lowest-numbered state in the lowest-order bit. There are 16 registers in total to accommodate the 256 state bits.

5.2.11 USER-DEFINABLE DISPLAYS

PATH: SETTINGS ⇨ PRODUCT SETUP ⇨⇩ USER-DEFINABLE DISPLAYS

```
■ USER-DEFINABLE
■ DISPLAYS
```

```
■ USER DISPLAY 1
■
```

MESSAGE

```
DISP 1 TOP LINE:
```

Range: up to 20 alphanumeric characters

MESSAGE

```
DISP 1 BOTTOM LINE:
```

Range: up to 20 alphanumeric characters

MESSAGE

```
DISP 1 ITEM 1
    0
```

Range: 0 to 65535 in steps of 1

MESSAGE

```
DISP 1 ITEM 2
    0
```

Range: 0 to 65535 in steps of 1

MESSAGE

```
DISP 1 ITEM 3
    0
```

Range: 0 to 65535 in steps of 1

MESSAGE

```
DISP 1 ITEM 4
    0
```

Range: 0 to 65535 in steps of 1

MESSAGE

```
DISP 1 ITEM 5:
    0
```

Range: 0 to 65535 in steps of 1

```
■ USER DISPLAY 2
■
```

↓

```
■ USER DISPLAY 8
■
```

This menu provides a mechanism for manually creating up to 8 user-defined information displays in a convenient viewing sequence in the USER DISPLAYS menu (between the TARGETS and ACTUAL VALUES top-level menus). The sub-menus facilitate text entry and Modbus Register data pointer options for defining the User Display content.

Also, any existing system display can be automatically copied into an available User Display by selecting the existing display and pressing the [ENTER] key. The display will then prompt "ADD TO USER DISPLAY LIST?". After selecting 'Yes', a message will indicate that the selected display has been added to the user display list. When this type of entry occurs, the sub-menus are automatically configured with the proper content - this content may subsequently be edited.

This menu is used **to enter** user-defined text and/or user-selected Modbus-registered data fields into the particular User Display. Each User Display consists of two 20-character lines (TOP & BOTTOM). The Tilde (~) character is used to mark the start of a data field - the length of the data field needs to be accounted for. Up to 5 separate data fields (ITEM 1...5) can be entered in a User Display - the nth Tilde (~) refers to the nth ITEM.

A User Display may be entered from the faceplate keypad or the URPC interface (preferred for convenience).

To enter text characters in the TOP LINE and BOTTOM LINE from the faceplate keypad:

1. Select the line to be edited.
2. Press the [■] key to enter text edit mode.
3. Use either VALUE key to scroll through the characters. A space is selected like a character.
4. Press the [■] key to advance the cursor to the next position.
5. Repeat step 3 and continue entering characters until the desired text is displayed.
6. The [HELP] key may be pressed at any time for context sensitive help information.
7. Press the [ENTER] key to store the new settings.

5

To enter a numerical value for any of the 5 ITEMs (the *decimal form* of the selected Modbus Register Address) from the faceplate keypad, use the number keypad. Use the value of '0' for any ITEMs not being used. Use the [HELP] key at any selected system display (Setting, Actual Value, or Command) which has a Modbus address, to view the *hexadecimal form* of the Modbus Register Address, then manually convert it to decimal form before entering it (URPC usage would conveniently facilitate this conversion).

Use the [MENU] key to go to the USER DISPLAYS menu **to view** the user-defined content. The current user displays will show in sequence, changing every 4 seconds. While viewing a User Display, press the [ENTER] key and then select the 'Yes" option **to remove** the display from the user display list. Use the [MENU] key again **to exit** the USER DISPLAYS menu.

EXAMPLE USER DISPLAY SETUP AND RESULT:

■ USER DISPLAY 1 ■	◀▶	DISP 1 TOP LINE: Current X ~ A	Shows user-defined text with first Tilde marker.
	MESSAGE ▲▼	DISP 1 BOTTOM LINE: Current Y ~ A	Shows user-defined text with second Tilde marker.
	MESSAGE ▲▼	DISP 1 ITEM 1: 6016	Shows decimal form of user-selected Modbus Register Address, corresponding to first Tilde marker.
	MESSAGE ▲▼	DISP 1 ITEM 2: 6357	Shows decimal form of user-selected Modbus Register Address, corresponding to 2nd Tilde marker.
	MESSAGE ▲▼	DISP 1 ITEM 3: 0	This item is not being used - there is no corresponding Tilde marker in Top or Bottom lines.
	MESSAGE ▲▼	DISP 1 ITEM 4: 0	This item is not being used - there is no corresponding Tilde marker in Top or Bottom lines.
	MESSAGE ▲	DISP 1 ITEM 5: 0	This item is not being used - there is no corresponding Tilde marker in Top or Bottom lines.
USER DISPLAYS	→	Current X 0.850 A Current Y 0.327 A	Shows the resultant display content.

5.2.12 INSTALLATION

PATH: SETTINGS ⇨ PRODUCT SETUP ⇨⇩ INSTALLATION

```
■ INSTALLATION
■
```

```
RELAY SETTINGS:
Not Programmed
```

Range: Not Programmed, Programmed

MESSAGE

```
RELAY NAME:
Relay-1
```

Range: up to 20 alphanumeric characters

To safeguard against the installation of a relay whose settings have not been entered, the unit will not allow signaling of any output relay until **RELAY SETTINGS** is set to "Programmed". This setting is defaulted to "Not Programmed" when the relay leaves the factory. The UNIT NOT PROGRAMMED self-test error message is displayed automatically until the relay is put into the Programmed state.

The **RELAY NAME** setting allows the user to uniquely identify a relay. This name will appear on generated reports. This name is also used to identify specific devices which are engaged in automatically sending/receiving data over the Ethernet communications channel using the UCA2/MMS protocol.

a) CURRENT BANKS

PATH: SETTINGS ⇨⇩ SYSTEM SETUP ⇨ AC INPUTS ⇨ CURRENT BANK X1

NOTE **Because energy parameters are accumulated, these values should be recorded and then reset immediately prior to changing CT characteristics.**

```
■ CURRENT BANK X1
■
```

```
PHASE CT X1
PRIMARY:     1 A
```

Range: 1 to 65000 A in steps of 1

MESSAGE

```
PHASE CT X1
SECONDARY: 1 A
```

Range: 1 A, 5 A

MESSAGE

```
GROUND CT X1
PRIMARY:     1 A
```

Range: 1 to 65000 A in steps of 1

MESSAGE

```
GROUND CT X1
SECONDARY: 1 A
```

Range: 1 A, 5 A

'X' = F, M, or U. 'F', 'M', and 'U' are module slot position letters. See also the section INTRODUCTION TO AC SOURCES.

Up to 6 banks of phase/ground CTs can be set.

These settings are critical for all features that have settings dependent on current measurements. When the relay is ordered, the CT module must be specified to include a standard or sensitive ground input. As the phase CTs are connected in Wye (star), the calculated phasor sum of the three phase currents (IA + IB + IC = Neutral Current = 3Io) is used as the input for the neutral overcurrent elements. In addition, a zero sequence (core balance) CT which senses current in all of the circuit primary conductors, or a CT in a neutral grounding conductor may also be used. For this configuration, the ground CT primary rating must be entered. To detect low level ground fault currents, the sensitive ground input may be used. In this case, the sensitive ground CT primary rating must be entered. For more details on CT connections, refer to the HARDWARE chapter.

Enter the rated CT primary current values. For both 1000:5 and 1000:1 CTs, the entry would be 1000. For correct operation, the CT secondary rating must match the setting (which must also correspond to the specific CT connections used).

If CT inputs (banks of current) are to be summed as one source current, the following rule applies:

EXAMPLE:

SRC1 = F1 + F5 + U1

Where *F1*, *F5*, and *U1* are banks of CTs with ratios of 500:1, 1000:1 and 800:1 respectively.

1 pu is the highest primary current. In this case, 1000 is entered and the secondary current from the 500:1 and 800:1 ratio CTs will be adjusted to that which would be created by a 1000:1 CT before summation. If a protection element is set up to act on SRC1 currents, then PKP level of 1 pu will operate on 1000 A primary.

The same rule will apply for sums of currents from CTs with different secondary taps (5 A and 1 A).

b) VOLTAGE BANKS

PATH: SETTINGS ⇨⇩ SYSTEM SETUP ⇨ AC INPUTS ⇨⇩ VOLTAGE BANK X1

CAUTION **Because energy parameters are accumulated, these values should be recorded and then reset immediately prior to changing VT characteristics.**

■ VOLTAGE BANK X5 ■		PHASE VT X5 CONNECTION: Wye	*Range: Wye, Delta*
	MESSAGE	PHASE VT X5 SECONDARY: 66.4 V	*Range: 50.0 to 240.0 V in steps of 0.1*
	MESSAGE	PHASE VT X5 RATIO: 1.00 :1	*Range: 1.00 to 24000.00 in steps of 1.00*
	MESSAGE	AUXILIARY VT X5 CONNECTION: Vag	*Range: Vn, Vag, Vbg, Vcg, Vab, Vbc, Vca*
	MESSAGE	AUXILIARY VT X5 SECONDARY: 66.4 V	*Range: 50.0 to 240.0 V in steps of 0.1*
	MESSAGE	AUXILIARY VT X5 RATIO: 1.00 :1	*Range: 1.00 to 24000.00 in steps of 1.00*

'X' = F, M, or U. 'F', 'M', and 'U' are module slot position letters. See also the INTRODUCTION TO AC SOURCES section.

Up to 3 banks of phase/auxiliary VTs can be set.

With VTs installed, the relay can be used to perform voltage measurements as well as power calculations. Enter the **PHASE VT xx CONNECTION** made to the system as "Wye" or "Delta". An open-delta source VT connection would be entered as "Delta". See the typical wiring diagram in the HARDWARE chapter for details.

NOTE The nominal Phase VT Secondary Voltage setting is the voltage across the relay input terminals when nominal voltage is applied to the VT primary.

For example, on a system with a 13.8 kV nominal primary voltage and with a 14400:120 Volt VT in a Delta connection, the secondary voltage would be 115, i.e. (13800 / 14400) × 120. For a Wye connection, the voltage value entered must be the phase to neutral voltage which would be 115 / $\sqrt{3}$ = 66.4.

On a 14.4 kV system with a Delta connection and a VT primary to secondary turns ratio of 14400:120, the voltage value entered would be 120, i.e. 14400 / 120.

5.3.2 POWER SYSTEM

PATH: SETTINGS ⇨⇩ SYSTEM SETUP ⇨⇩ POWER SYSTEM

■ POWER SYSTEM ■		NOMINAL FREQUENCY: 60 Hz	*Range: 25 to 60 Hz in steps of 1*
	MESSAGE	PHASE ROTATION: ABC	*Range: ABC, ACB*
	MESSAGE	FREQUENCY AND PHASE REFERENCE: SRC 1	*Range: SRC 1, SRC 2,..., SRC 6*
	MESSAGE	FREQUENCY TRACKING: Enabled	*Range: Disabled, Enabled*

The power system **NOMINAL FREQUENCY** value is used as a default to set the digital sampling rate if the system frequency cannot be measured from available signals. This may happen if the signals are not present or are heavily distorted. Before reverting to the nominal frequency, the frequency tracking algorithm holds the last valid frequency measurement for a safe period of time while waiting for the signals to reappear or for the distortions to decay.

The phase sequence of the power system is required to properly calculate sequence components and power parameters. The **PHASE ROTATION** setting matches the power system phase sequence. Note that this setting informs the relay of the actual system phase sequence, either ABC or ACB. CT and VT inputs on the relay, labeled as A, B, and C, must be connected to system phases A, B, and C for correct operation.

The **FREQUENCY AND PHASE REFERENCE** setting determines which signal source is used (and hence which AC signal) for phase angle reference. The AC signal used is prioritized based on the AC inputs that are configured for the signal source: phase voltages takes precedence, followed by auxiliary voltage, then phase currents, and finally ground current.

For three phase selection, phase A is used for angle referencing ($V_{\text{ANGLE REF}} = V_A$), while Clarke transformation of the phase signals is used for frequency metering and tracking ($V_{\text{FREQUENCY}} = (2V_A - V_B - V_C)/3$) for better performance during fault, open pole, and VT and CT fail conditions.

The phase reference and frequency tracking AC signals are selected based upon the Source configuration, regardless of whether or not a particular signal is actually applied to the relay.

Phase angle of the reference signal will always display zero degrees and all other phase angles will be relative to this signal. If the pre-selected reference signal is not measurable at a given time, the phase angles are not referenced.

The phase angle referencing is done via a phase locked loop, which can synchronize independent UR relays if they have the same AC signal reference. These results in very precise correlation of time tagging in the event recorder between different UR relays provided the relays have an IRIG-B connection.

NOTE

FREQUENCY TRACKING should only be set to "Disabled" in very unusual circumstances; consult the factory for special variable-frequency applications.

5

5.3.3 SIGNAL SOURCES

PATH: SETTINGS ⇨⇩ SYSTEM SETUP ⇨⇩ SIGNAL SOURCES ⇨ SOURCE 1(6)

```
■ SOURCE 1
■
```

```
SOURCE 1 NAME:
SRC 1
```

Range: up to 6 alphanumeric characters

MESSAGE

```
SOURCE 1 PHASE CT:
None
```

Range: None, F1, F5, F1+F5,..., F1+F5+M1+M5+U1+U5
Only phase current inputs will be displayed.

MESSAGE

```
SOURCE 1 GROUND CT:
None
```

Range: None, F1, F5, F1+F5,..., F1+F5+M1+M5+U1+U5
Only ground current inputs will be displayed.

MESSAGE

```
SOURCE 1 PHASE VT:
None
```

Range: None, F1, F5, M1, M5, U1, U5
Only phase voltage inputs will be displayed.

MESSAGE

```
SOURCE 1 AUX VT:
None
```

Range: None, F1, F5, M1, M5, U1, U5
Only auxiliary voltage inputs will be displayed.

There are up to 6 identical Source setting menus available, numbered from 1 to 6.

"SRC 1" can be replaced by whatever name is defined by the user for the associated source.

‘F’, ‘U’, and ‘M’ are module slot position letters. The number following the letter represents either the first bank of four channels (1, 2, 3, 4) called ‘1’ or the second bank of four channels (5, 6, 7, 8) called ‘5’ in a particular CT/VT module. Refer to the INTRODUCTION TO AC SOURCES section at the beginning of this chapter for additional details.

It is possible to select the sum of any combination of CTs. The first channel displayed is the CT to which all others will be referred. For example, the selection “F1+F5” indicates the sum of each phase from channels “F1” and “F5”, scaled to whichever CT has the higher ratio. Selecting “None” hides the associated actual values.

The approach used to configure the AC Sources consists of several steps; first step is to specify the information about each CT and VT input. For CT inputs, this is the nominal primary and secondary current. For VTs, this is the connection type, ratio and nominal secondary voltage. Once the inputs have been specified, the configuration for each Source is entered, including specifying which CTs will be summed together.

USER SELECTION OF AC PARAMETERS FOR COMPARATOR ELEMENTS:

CT/VT modules automatically calculate all current and voltage parameters that can be calculated from the inputs available. Users will have to select the specific input parameters that are to be measured by every element, as selected in the element settings. The internal design of the element specifies which type of parameter to use and provides a setting for selection of the Source. In some elements where the parameter may be either fundamental or RMS magnitude, such as phase time overcurrent, two settings are provided. One setting specifies the Source, the second selects between fundamental phasor and RMS.

AC INPUT ACTUAL VALUES:

The calculated parameters associated with the configured voltage and current inputs are displayed in the current and voltage input sections of Actual Values. Only the phasor quantities associated with the actual AC physical input channels will be displayed here. All parameters contained within a configured Source are displayed in the Sources section of Actual Values.

EXAMPLE USE OF SOURCES:

An example of the use of Sources, with a relay with three CT/VT modules, is shown in the diagram below. A relay could have the following hardware configuration:

INCREASING SLOT POSITION LETTER -->		
CT/VT MODULE 1	**CT/VT MODULE 2**	**CT/VT MODULE 3**
CTs	CTs	VTs
CTs	VTs	---

This configuration could be used on a two winding transformer, with one winding connected into a breaker-and-a-half system. The following figure shows the arrangement of Sources used to provide the functions required in this application, and the CT/VT inputs that are used to provide the data.

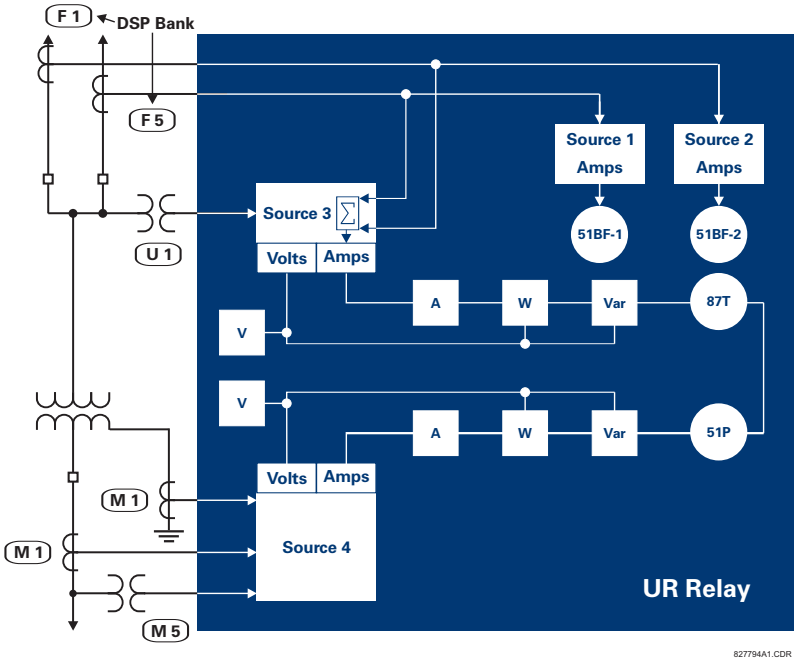

Figure 5–3: EXAMPLE USE OF SOURCES

5.3.4 FLEXCURVES™

PATH: SETTINGS ⇨⇩ SYSTEM SETUP ⇨⇩ FLEXCURVES ⇨ FLEXCURVE A

```
■ FLEXCURVE A
■
```

⇔

```
FLEXCURVE A TIME AT
0.00 xPKP:     0 ms
```

Range: 0 to 65535 ms in steps of 1

FlexCurves™ A and B have settings for entering times to Reset/Operate at the following pickup levels: 0.00 to 0.98 / 1.03 to 20.00. This data is converted into 2 continuous curves by linear interpolation between data points. To enter a custom FlexCurve™, enter the Reset/Operate time (using the ⊕ VALUE ⊖ keys) for each selected pickup point (using the ⊕ MESSAGE ⊖ keys) for the desired protection curve (A or B).

Table 5–9: FLEXCURVE™ TABLE

RESET	TIME MS	RESET	TIME MS	OPERATE	TIME MS	OPERATE	TIME MS	OPERATE	TIME MS	OPERATE	TIME MS
0.00		0.68		1.03		2.9		4.9		10.5	
0.05		0.70		1.05		3.0		5.0		11.0	
0.10		0.72		1.1		3.1		5.1		11.5	
0.15		0.74		1.2		3.2		5.2		12.0	
0.20		0.76		1.3		3.3		5.3		12.5	
0.25		0.78		1.4		3.4		5.4		13.0	
0.30		0.80		1.5		3.5		5.5		13.5	
0.35		0.82		1.6		3.6		5.6		14.0	
0.40		0.84		1.7		3.7		5.7		14.5	
0.45		0.86		1.8		3.8		5.8		15.0	
0.48		0.88		1.9		3.9		5.9		15.5	
0.50		0.90		2.0		4.0		6.0		16.0	
0.52		0.91		2.1		4.1		6.5		16.5	
0.54		0.92		2.2		4.2		7.0		17.0	
0.56		0.93		2.3		4.3		7.5		17.5	
0.58		0.94		2.4		4.4		8.0		18.0	
0.60		0.95		2.5		4.5		8.5		18.5	
0.62		0.96		2.6		4.6		9.0		19.0	
0.64		0.97		2.7		4.7		9.5		19.5	
0.66		0.98		2.8		4.8		10.0		20.0	

NOTE

The relay using a given FlexCurve™ applies linear approximation for times between the user-entered points. Special care must be applied when setting the two points that are close to the multiple of pickup of 1, i.e. 0.98 pu and 1.03 pu. It is recommended to set the two times to a similar value; otherwise, the linear approximation may result in undesired behavior for the operating quantity the is close to 1.00 pu.

5.4.1 INTRODUCTION TO FLEXLOGIC™

To provide maximum flexibility to the user, the arrangement of internal digital logic combines fixed and user-programmed parameters. Logic upon which individual features are designed is fixed, and all other logic, from digital input signals through elements or combinations of elements to digital outputs, is variable. The user has complete control of all variable logic through FlexLogic™. In general, the system receives analog and digital inputs which it uses to produce analog and digital outputs. The major sub-systems of a generic UR relay involved in this process are shown below.

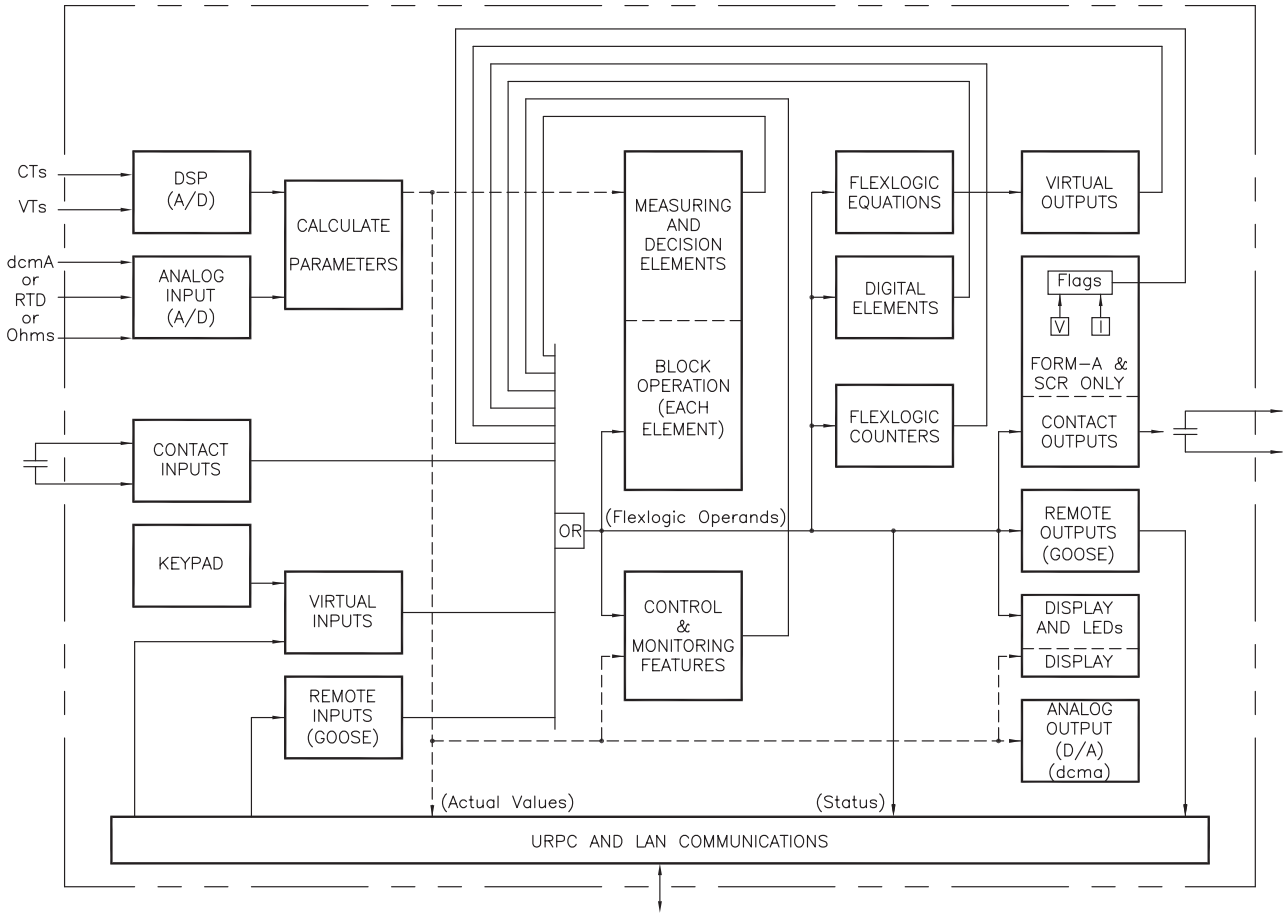

Figure 5–4: UR ARCHITECTURE OVERVIEW

The states of all digital signals used in the UR are represented by flags (or FlexLogic™ operands, which are described later in this section). A digital "1" is represented by a 'set' flag. Any external contact change-of-state can be used to block an element from operating, as an input to a control feature in a FlexLogic™ equation, or to operate a contact output. The state of the contact input can be displayed locally or viewed remotely via the communications facilities provided. If a simple scheme where a contact input is used to block an element is desired, this selection is made when programming the element. This capability also applies to the other features that set flags: elements, virtual inputs, remote inputs, schemes, and human operators.

If more complex logic than presented above is required, it is implemented via FlexLogic™. For example, if it is desired to have the closed state of contact input H7a and the operated state of the phase undervoltage element block the operation of the phase time overcurrent element, the two control input states are programmed in a FlexLogic™ equation. This equation ANDs the two control inputs to produce a "virtual output" which is then selected when programming the phase time overcurrent to be used as a blocking input. Virtual outputs can only be created by FlexLogic™ equations.

Traditionally, protective relay logic has been relatively limited. Any unusual applications involving interlocks, blocking, or supervisory functions had to be hard-wired using contact inputs and outputs. FlexLogic™ minimizes the requirement for auxiliary components and wiring while making more complex schemes possible.

The logic that determines the interaction of inputs, elements, schemes and outputs is field programmable through the use of logic equations that are sequentially processed. The use of virtual inputs and outputs in addition to hardware is available internally and on the communication ports for other relays to use (distributed FlexLogic™).

FlexLogic™ allows users to customize the relay through a series of equations that consist of operators and operands. The operands are the states of inputs, elements, schemes and outputs. The operators are logic gates, timers and latches (with set and reset inputs). A system of sequential operations allows any combination of specified operands to be assigned as inputs to specified operators to create an output. The final output of an equation is a numbered register called a virtual output. Virtual outputs can be used as an input operand in any equation, including the equation that generates the output, as a seal-in or other type of feedback.

A FlexLogic™ equation consists of parameters that are either operands or operators. Operands have a logic state of 1 or 0. Operators provide a defined function, such as an AND gate or a Timer. Each equation defines the combinations of parameters to be used to set a VIRTUAL OUTPUT flag. Evaluation of an equation results in either a 1 (= ON, i.e. flag set) or 0 (= OFF, i.e. flag not set). Each equation is evaluated at least 4 times every power system cycle.

Some types of operands are present in the relay in multiple instances; e.g. contact and remote inputs. These types of operands are grouped together (for presentation purposes only) on the faceplate display. The characteristics of the different types of operands are listed in the table: FLEXLOGIC™ OPERAND TYPES.

Table 5–10: UR FLEXLOGIC™ OPERAND TYPES

OPERAND TYPE	STATE	EXAMPLE FORMAT	CHARACTERISTICS [INPUT IS '1' (= ON) IF...]
Contact Input	On	Cont Ip On	Voltage is presently applied to the input (external contact closed).
	Off	Cont Ip Off	Voltage is presently not applied to the input (external contact open).
Contact Output (type Form-A contact only)	Voltage On	Cont Op 1 VOn	Voltage exists across the contact.
	Voltage Off	Cont Op 1 VOff	Voltage does not exists across the contact.
	Current On	Cont Op 1 IOn	Current is flowing through the contact.
	Current Off	Cont Op 1 IOff	Current is not flowing through the contact.
Element (Analog)	Pickup	PHASE TOC1 PKP	The tested parameter is presently above the pickup setting of an element which responds to rising values or below the pickup setting of an element which responds to falling values.
	Dropout	PHASE TOC1 DPO	This operand is the logical inverse of the above PKP operand.
	Operate	PHASE TOC1 OP	The tested parameter has been above/below the pickup setting of the element for the programmed delay time, or has been at logic 1 and is now at logic 0 but the reset timer has not finished timing.
	Block	PH DIR1 BLK	The output of the comparator is set to the block function.
Element (Digital)	Pickup	Dig Element 1 PKP	The input operand is at logic 1.
	Dropout	Dig Element 1 DPO	This operand is the logical inverse of the above PKP operand.
	Operate	Dig Element 1 OP	The input operand has been at logic 1 for the programmed pickup delay time, or has been at logic 1 for this period and is now at logic 0 but the reset timer has not finished timing.
Element (Digital Counter)	Higher than	Counter 1 HI	The number of pulses counted is above the set number.
	Equal to	Counter 1 EQL	The number of pulses counted is equal to the set number.
	Lower than	Counter 1 LO	The number of pulses counted is below the set number.
Fixed	On	On	Logic 1
	Off	Off	Logic 0
Remote Input	On	REMOTE INPUT 1 On	The remote input is presently in the ON state.
Virtual Input	On	Virt Ip 1 On	The virtual input is presently in the ON state.
Virtual Output	On	Virt Op 1 On	The virtual output is presently in the set state (i.e. evaluation of the equation which produces this virtual output results in a "1").

The operands available for this relay are listed alphabetically by types in the following table.

Table 5–11: F35 FLEXLOGIC™ OPERANDS (Sheet 1 of 3)

OPERAND TYPE	OPERAND SYNTAX	OPERAND DESCRIPTION
ELEMENT: Autoreclose (per CT bank)	AR 1 ENABLED AR 1 RIP AR 1 LO AR 1 BLK FROM MAN CL AR 1 CLOSE AR 1 SHOT CNT=0 ↓ AR 1 SHOT CNT=4 AR 1 DISABLED	Autoreclose 1 is enabled Autoreclose 1 is in progress Autoreclose 1 is locked out Autoreclose 1 is temporarily disabled Autoreclose 1 close command is issued Autoreclose 1 shot count is 0 Autoreclose 1 shot count is 4 Autoreclose 1 is disabled
	AR 2 to AR3	Same set of operands as shown for AR 1
ELEMENT: Auxiliary OV	AUX OV1 PKP AUX OV1 DPO AUX OV1 OP	Auxiliary Overvoltage element has picked up Auxiliary Overvoltage element has dropped out Auxiliary Overvoltage element has operated
ELEMENT: Auxiliary UV	AUX UV1 PKP AUX UV1 DPO AUX UV1 OP	Auxiliary Undervoltage element has picked up Auxiliary Undervoltage element has dropped out Auxiliary Undervoltage element has operated
ELEMENT: Digital Element	Dig Element 1 PKP Dig Element 1 OP Dig Element 1 DPO ↓ Dig Element 16 PKP Dig Element 16 OP Dig Element 16 DPO	Digital Element 1 is picked up Digital Element 1 is operated Digital Element 1 is dropped out ↓ Digital Element 16 is picked up Digital Element 16 is operated Digital Element 16 is dropped out
ELEMENT: FlexElements™	FLEXELEMENT 1 PKP FLEXELEMENT 1 OP FLEXELEMENT 1 DPO ↓ FLEXELEMENT 8 PKP FLEXELEMENT 8 OP FLEXELEMENT 8 DPO	FlexElement 1 has picked up FlexElement 1 has operated FlexElement 1 has dropped out ↓ FlexElement 8 has picked up FlexElement 8 has operated FlexElement 8 has dropped out
ELEMENT: Ground IOC	GROUND IOC1 PKP GROUND IOC1 OP GROUND IOC1 DPO	Ground Instantaneous Overcurrent 1 has picked up Ground Instantaneous Overcurrent 1 has operated Ground Instantaneous Overcurrent 1 has dropped out
	GROUND IOC2 to IOC12	Same set of operands as shown for GROUND IOC 1
ELEMENT: Ground TOC	GROUND TOC1 PKP GROUND TOC1 OP GROUND TOC1 DPO	Ground Time Overcurrent 1 has picked up Ground Time Overcurrent 1 has operated Ground Time Overcurrent 1 has dropped out
	GROUND TOC2 to TOC6	Same set of operands as shown for GROUND TOC1
ELEMENT: Neutral IOC	NEUTRAL IOC1 PKP NEUTRAL IOC1 OP NEUTRAL IOC1 DPO	Neutral Instantaneous Overcurrent 1 has picked up Neutral Instantaneous Overcurrent 1 has operated Neutral Instantaneous Overcurrent 1 has dropped out
	NEUTRAL IOC2 to IOC12	Same set of operands as shown for NEUTRAL IOC1
ELEMENT: Neutral OV	NEUTRAL OV1 PKP NEUTRAL OV1 DPO NEUTRAL OV1 OP	Neutral Overvoltage element has picked up Neutral Overvoltage element has dropped out Neutral Overvoltage element has operated
ELEMENT: Neutral TOC	NEUTRAL TOC1 PKP NEUTRAL TOC1 OP NEUTRAL TOC1 DPO	Neutral Time Overcurrent 1 has picked up Neutral Time Overcurrent 1 has operated Neutral Time Overcurrent 1 has dropped out
	NEUTRAL TOC2 to TOC6	Same set of operands as shown for NEUTRAL TOC1
ELEMENT: Phase IOC	PHASE IOC1 PKP PHASE IOC1 OP PHASE IOC1 DPO PHASE IOC1 PKP A PHASE IOC1 PKP B PHASE IOC1 PKP C PHASE IOC1 OP A PHASE IOC1 OP B PHASE IOC1 OP C PHASE IOC1 DPO A PHASE IOC1 DPO B PHASE IOC1 DPO C	At least one phase of PHASE IOC1 has picked up At least one phase of PHASE IOC1 has operated At least one phase of PHASE IOC1 has dropped out Phase A of PHASE IOC1 has picked up Phase B of PHASE IOC1 has picked up Phase C of PHASE IOC1 has picked up Phase A of PHASE IOC1 has operated Phase B of PHASE IOC1 has operated Phase C of PHASE IOC1 has operated Phase A of PHASE IOC1 has dropped out Phase B of PHASE IOC1 has dropped out Phase C of PHASE IOC1 has dropped out
	PHASE IOC2 to IOC12	Same set of operands as shown for PHASE IOC1

Table 5–11: F35 FLEXLOGIC™ OPERANDS (Sheet 2 of 3)

OPERAND TYPE	OPERAND SYNTAX	OPERAND DESCRIPTION
ELEMENT: Phase TOC	PHASE TOC1 PKP PHASE TOC1 OP PHASE TOC1 DPO PHASE TOC1 PKP A PHASE TOC1 PKP B PHASE TOC1 PKP C PHASE TOC1 OP A PHASE TOC1 OP B PHASE TOC1 OP C PHASE TOC1 DPO A PHASE TOC1 DPO B PHASE TOC1 DPO C	At least one phase of PHASE TOC1 has picked up At least one phase of PHASE TOC1 has operated At least one phase of PHASE TOC1 has dropped out Phase A of PHASE TOC1 has picked up Phase B of PHASE TOC1 has picked up Phase C of PHASE TOC1 has picked up Phase A of PHASE TOC1 has operated Phase B of PHASE TOC1 has operated Phase C of PHASE TOC1 has operated Phase A of PHASE TOC1 has dropped out Phase B of PHASE TOC1 has dropped out Phase C of PHASE TOC1 has dropped out
	PHASE TOC2 to TOC6	Same set of operands as shown for PHASE TOC1
ELEMENT: Phase UV	PHASE UV1 PKP PHASE UV1 OP PHASE UV1 DPO PHASE UV1 PKP A PHASE UV1 PKP B PHASE UV1 PKP C PHASE UV1 OP A PHASE UV1 OP B PHASE UV1 OP C PHASE UV1 DPO A PHASE UV1 DPO B PHASE UV1 DPO C	At least one phase of UV1 has picked up At least one phase of UV1 has operated At least one phase of UV1 has dropped out Phase A of UV1 has picked up Phase B of UV1 has picked up Phase C of UV1 has picked up Phase A of UV1 has operated Phase B of UV1 has operated Phase C of UV1 has operated Phase A of UV1 has dropped out Phase B of UV1 has dropped out Phase C of UV1 has dropped out
	PHASE UV2	Same set of operands as shown for PHASE UV1
ELEMENT: Setting Group	SETTING GROUP ACT 1 ↓ SETTING GROUP ACT 8	Setting group 1 is active ↓ Setting group 8 is active
ELEMENT: Underfrequency	UNDERFREQ 1 PKP UNDERFREQ 1 OP UNDERFREQ 1 DPO	Underfrequency 1 has picked up Underfrequency 1 has operated Underfrequency 1 has dropped out
	UNDERFREQ 2...	Same set of operands as shown for UNDERFREQ 1 above
FIXED OPERANDS	Off	Logic = 0. Does nothing and may be used as a delimiter in an equation list; used as 'Disable' by other features.
	On	Logic = 1. Can be used as a test setting.
INPUTS/OUTPUTS: Contact Inputs	Cont Ip 1 On Cont Ip 2 On ↓ Cont Ip 1 Off Cont Ip 2 Off ↓	(will not appear unless ordered) (will not appear unless ordered) ↓ (will not appear unless ordered) (will not appear unless ordered) ↓
INPUTS/OUTPUTS: Contact Outputs, Current (from detector on Form-A output only)	Cont Op 1 IOn Cont Op 2 IOn ↓	(will not appear unless ordered) (will not appear unless ordered) ↓
	Cont Op 1 IOff Cont Op 2 IOff ↓	(will not appear unless ordered) (will not appear unless ordered) ↓
INPUTS/OUTPUTS: Contact Outputs, Voltage (from detector on Form-A output only)	Cont Op 1 VOn Cont Op 2 VOn ↓	(will not appear unless ordered) (will not appear unless ordered) ↓
	Cont Op 1 VOff Cont Op 2 VOff ↓	(will not appear unless ordered) (will not appear unless ordered) ↓
INPUTS/OUTPUTS: Remote Inputs	REMOTE INPUT 1 On ↓ REMOTE INPUT 32 On	Flag is set, logic=1 ↓ Flag is set, logic=1
INPUTS/OUTPUTS: Virtual Inputs	Virt Ip 1 On ↓ Virt Ip 32 On	Flag is set, logic=1 ↓ Flag is set, logic=1
INPUTS/OUTPUTS: Virtual Outputs	Virt Op 1 On ↓ Virt Op 64 On	Flag is set, logic=1 ↓ Flag is set, logic=1

Table 5–11: F35 FLEXLOGIC™ OPERANDS (Sheet 3 of 3)

OPERAND TYPE	OPERAND SYNTAX	OPERAND DESCRIPTION
REMOTE DEVICES	REMOTE DEVICE 1 On ↓ REMOTE DEVICE 16 On	Flag is set, logic=1 ↓ Flag is set, logic=1
	REMOTE DEVICE 1 Off ↓ REMOTE DEVICE 16 Off	Flag is set, logic=1 ↓ Flag is set, logic=1
RESETTING	RESET OP RESET OP (COMMS) RESET OP (OPERAND) RESET OP (PUSHBUTTON)	Reset command is operated (set by all 3 operands below) Communications source of the reset command Operand source of the reset command Reset key (pushbutton) source of the reset command
SELF-DIAGNOSTICS	ANY MAJOR ERROR ANY MINOR ERROR ANY SELF-TEST LOW ON MEMORY WATCHDOG ERROR PROGRAM ERROR EEPROM DATA ERROR PRI ETHERNET FAIL SEC ETHERNET FAIL BATTERY FAIL SYSTEM EXCEPTION UNIT NOT PROGRAMMED EQUIPMENT MISMATCH FLEXLGC ERROR TOKEN PROTOTYPE FIRMWARE UNIT NOT CALIBRATED NO DSP INTERRUPTS DSP ERROR IRIG-B FAILURE REMOTE DEVICE OFFLINE	Any of the major self-test errors generated (major error) Any of the minor self-test errors generated (minor error) Any self-test errors generated (generic, any error) See description in the COMMANDS chapter. See description in the COMMANDS chapter. See description in the COMMANDS chapter. See description in the COMMANDS chapter. See description in the COMMANDS chapter. See description in the COMMANDS chapter. See description in the COMMANDS chapter. See description in the COMMANDS chapter. See description in the COMMANDS chapter. See description in the COMMANDS chapter. See description in the COMMANDS chapter. See description in the COMMANDS chapter. See description in the COMMANDS chapter. See description in the COMMANDS chapter. See description in the COMMANDS chapter. See description in the COMMANDS chapter. See description in the COMMANDS chapter.

Some operands can be re-named by the user. These are the names of the breakers in the breaker control feature, the ID (identification) of contact inputs, the ID of virtual inputs, and the ID of virtual outputs. If the user changes the default name/ID of any of these operands, the assigned name will appear in the relay list of operands. The default names are shown in the FLEXLOGIC™ OPERANDS table above.

The characteristics of the logic gates are tabulated below, and the operators available in FlexLogic™ are listed in the FLEX-LOGIC™ OPERATORS table.

Table 5–12: FLEXLOGIC™ GATE CHARACTERISTICS

GATES	NUMBER OF INPUTS	OUTPUT IS ‘1’ (= ON) IF...
NOT	1	input is ‘0’
OR	2 to 16	any input is ‘1’
AND	2 to 16	all inputs are ‘1’
NOR	2 to 16	all inputs are ‘0’
NAND	2 to 16	any input is ‘0’
XOR	2	only one input is ‘1’

Table 5–13: FLEXLOGIC™ OPERATORS

OPERATOR TYPE	OPERATOR SYNTAX	DESCRIPTION	NOTES
Editor	INSERT	Insert a parameter in an equation list.	
	DELETE	Delete a parameter from an equation list.	
End	END	The first END encountered signifies the last entry in the list of FlexLogic™ parameters that is processed.	
One Shot	POSITIVE ONE SHOT	One shot that responds to a positive going edge.	A 'one shot' refers to a single input gate that generates a pulse in response to an edge on the input. The output from a 'one shot' is True (positive) for only one pass through the FlexLogic™ equation. There is a maximum of 32 'one shots'.
	NEGATIVE ONE SHOT	One shot that responds to a negative going edge.	
	DUAL ONE SHOT	One shot that responds to both the positive and negative going edges.	
Logic Gate	NOT	Logical Not	Operates on the previous parameter.
	OR(2) ↓ OR(16)	2 input OR gate ↓ 16 input OR gate	Operates on the 2 previous parameters. ↓ Operates on the 16 previous parameters.
	AND(2) ↓ AND(16)	2 input AND gate ↓ 16 input AND gate	Operates on the 2 previous parameters. ↓ Operates on the 16 previous parameters.
	NOR(2) ↓ NOR(16)	2 input NOR gate ↓ 16 input NOR gate	Operates on the 2 previous parameters. ↓ Operates on the 16 previous parameters.
	NAND(2) ↓ NAND(16)	2 input NAND gate ↓ 16 input NAND gate	Operates on the 2 previous parameters. ↓ Operates on the 16 previous parameters.
	XOR(2)	2 input Exclusive OR gate	Operates on the 2 previous parameters.
	LATCH (S,R)	Latch (Set, Reset) - reset-dominant	The parameter preceding LATCH(S,R) is the Reset input. The parameter preceding the Reset input is the Set input.
Timer	TIMER 1 ↓ TIMER 32	Timer as configured with FlexLogic™ Timer 1 settings. ↓ Timer as configured with FlexLogic™ Timer 32 settings.	The timer is started by the preceding parameter. The output of the timer is TIMER #.
Assign Virtual Output	= Virt Op 1 ↓ = Virt Op 64	Assigns previous FlexLogic™ parameter to Virtual Output 1. ↓ Assigns previous FlexLogic™ parameter to Virtual Output 64.	The virtual output is set by the preceding parameter

5.4.2 FLEXLOGIC™ RULES

When forming a FlexLogic™ equation, the sequence in the linear array of parameters must follow these general rules:

1. Operands must precede the operator which uses the operands as inputs.
2. Operators have only one output. The output of an operator must be used to create a virtual output if it is to be used as an input to two or more operators.
3. Assigning the output of an operator to a Virtual Output terminates the equation.
4. A timer operator (e.g. "TIMER 1") or virtual output assignment (e.g. " = Virt Op 1") may only be used once. If this rule is broken, a syntax error will be declared.

5.4.3 FLEXLOGIC™ EVALUATION

Each equation is evaluated in the order in which the parameters have been entered.

CAUTION

FLEXLOGIC™ PROVIDES LATCHES WHICH BY DEFINITION HAVE A MEMORY ACTION, REMAINING IN THE SET STATE AFTER THE SET INPUT HAS BEEN ASSERTED. HOWEVER, THEY ARE VOLATILE; I.E. THEY RESET ON THE RE-APPLICATION OF CONTROL POWER.

WHEN MAKING CHANGES TO PROGRAMMING, ALL FLEXLOGIC™ EQUATIONS ARE RE-COMPILED WHEN ANY NEW SETTING IS ENTERED, SO ALL LATCHES ARE AUTOMATICALLY RESET. IF IT IS REQUIRED TO RE-INITIALIZE FLEXLOGIC™ DURING TESTING, FOR EXAMPLE, IT IS SUGGESTED TO POWER THE UNIT DOWN AND THEN BACK UP.

5.4.4 FLEXLOGIC™ PROCEDURE EXAMPLE

This section provides an example of implementing logic for a typical application. The sequence of the steps is quite important as it should minimize the work necessary to develop the relay settings. Note that the example presented in the figure below is intended to demonstrate the procedure, not to solve a specific application situation.

In the example below, it is assumed that logic has already been programmed to produce Virtual Outputs 1 and 2, and is only a part of the full set of equations used. When using FlexLogic™, it is important to make a note of each Virtual Output used – a Virtual Output designation (1 to 64) can only be properly assigned once.

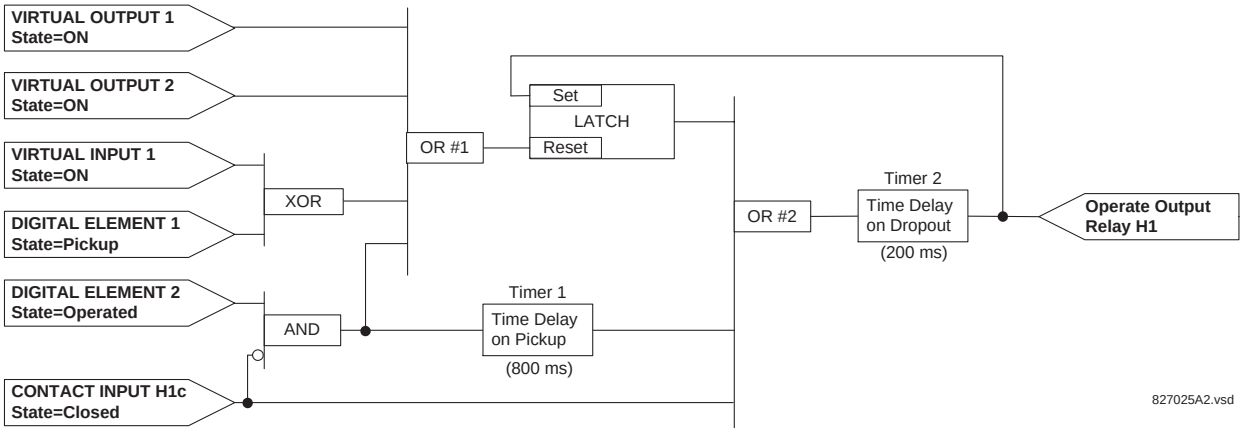

Figure 5–5: EXAMPLE LOGIC SCHEME

1. Inspect the example logic diagram to determine if the required logic can be implemented with the FlexLogic™ operators. If this is not possible, the logic must be altered until this condition is satisfied. Once this is done, count the inputs to each gate to verify that the number of inputs does not exceed the FlexLogic™ limits, which is unlikely but possible. If the number of inputs is too high, subdivide the inputs into multiple gates to produce an equivalent. For example, if 25 inputs to an AND gate are required, connect inputs 1 through 16 to one AND(16), 17 through 25 to another AND(9), and the outputs from these two gates to a third AND(2).

   Inspect each operator between the initial operands and final virtual outputs to determine if the output from the operator is used as an input to more than one following operator. If so, the operator output must be assigned as a Virtual Output.

   For the example shown above, the output of the AND gate is used as an input to both OR#1 and Timer 1, and must therefore be made a Virtual Output and assigned the next available number (i.e. Virtual Output 3). The final output must also be assigned to a Virtual Output as Virtual Output 4, which will be programmed in the contact output section to operate relay H1 (i.e. Output Contact H1).

Therefore, the required logic can be implemented with two FlexLogic™ equations with outputs of Virtual Output 3 and Virtual Output 4 as shown below.

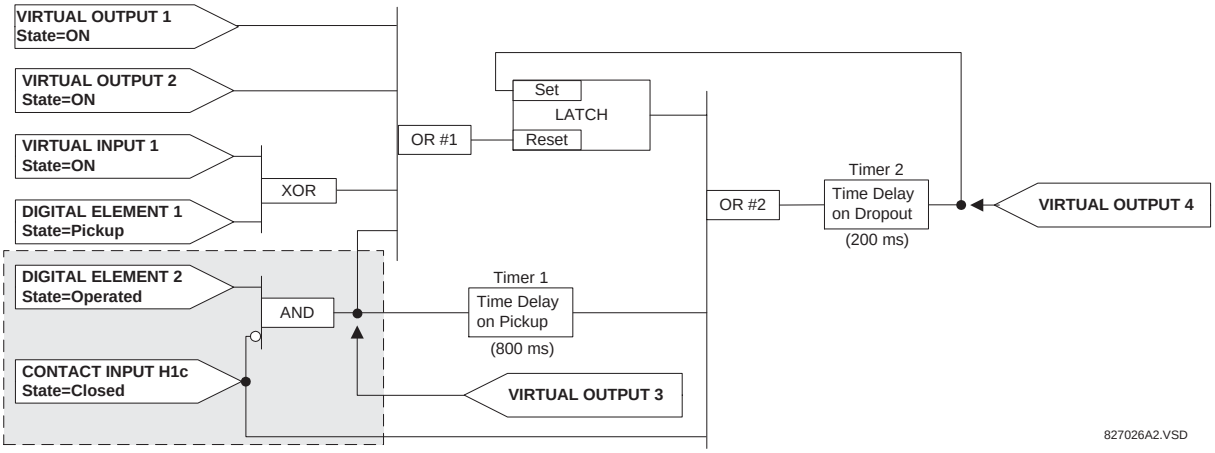

Figure 5–6: LOGIC EXAMPLE WITH VIRTUAL OUTPUTS

2. Prepare a logic diagram for the equation to produce Virtual Output 3, as this output will be used as an operand in the Virtual Output 4 equation (create the equation for every output that will be used as an operand first, so that when these operands are required they will already have been evaluated and assigned to a specific Virtual Output). The logic for Virtual Output 3 is shown below with the final output assigned.

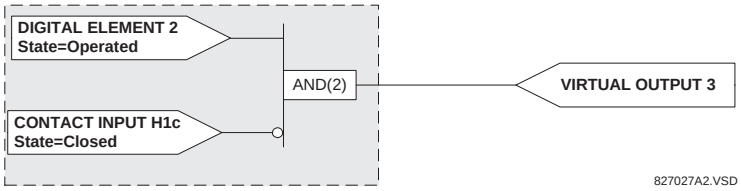

Figure 5–7: LOGIC FOR VIRTUAL OUTPUT 3

3. Prepare a logic diagram for Virtual Output 4, replacing the logic ahead of Virtual Output 3 with a symbol identified as Virtual Output 3, as shown below.

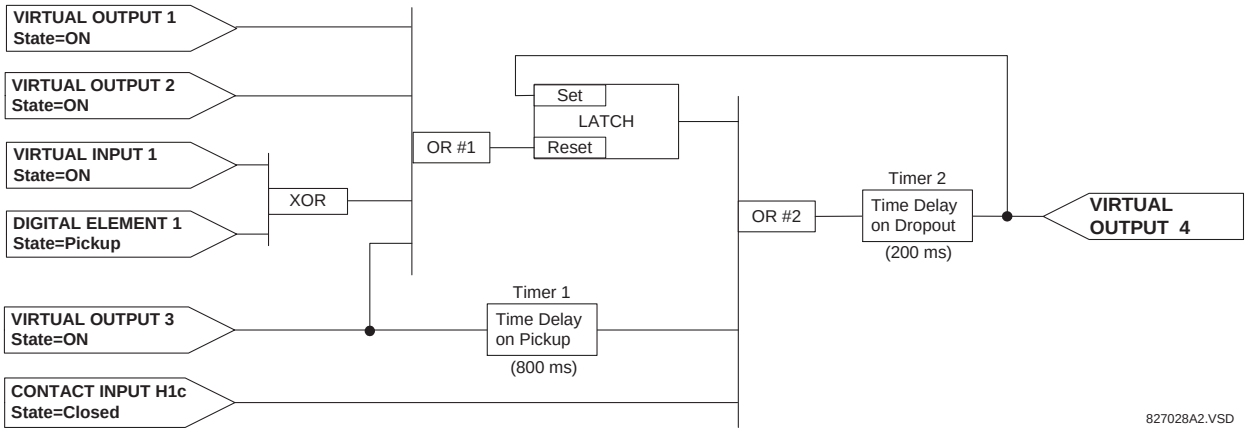

Figure 5–8: LOGIC FOR VIRTUAL OUTPUT 4

4. Program the FlexLogic™ equation for Virtual Output 3 by translating the logic into available FlexLogic™ parameters. The equation is formed one parameter at a time until the required logic is complete. It is generally easier to start at the output end of the equation and work back towards the input, as shown in the following steps. It is also recommended to list operator inputs from bottom to top. For demonstration, the final output will be arbitrarily identified as parameter 99, and each preceding parameter decremented by one in turn. Until accustomed to using FlexLogic™, it is suggested that a worksheet with a series of cells marked with the arbitrary parameter numbers be prepared, as shown below.

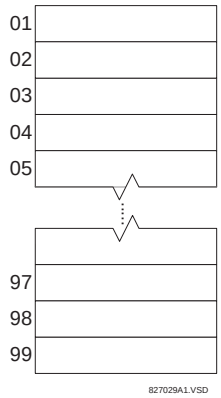

Figure 5–9: FLEXLOGIC™ WORKSHEET

5. Following the procedure outlined, start with parameter 99, as follows:

   99: The final output of the equation is Virtual Output 3, which is created by the operator "= Virt Op n". This parameter is therefore "= Virt Op 3."

   98: The gate preceding the output is an AND, which in this case requires two inputs. The operator for this gate is a 2-input AND so the parameter is “AND(2)”. Note that FlexLogic™ rules require that the number of inputs to most types of operators must be specified to identify the operands for the gate. As the 2-input AND will operate on the two operands preceding it, these inputs must be specified, starting with the lower.

   97: This lower input to the AND gate must be passed through an inverter (the NOT operator) so the next parameter is “NOT”. The NOT operator acts upon the operand immediately preceding it, so specify the inverter input next.

   96: The input to the NOT gate is to be contact input H1c. The ON state of a contact input can be programmed to be set when the contact is either open or closed. Assume for this example the state is to be ON for a closed contact. The operand is therefore "Cont Ip H1c On".

   95: The last step in the procedure is to specify the upper input to the AND gate, the operated state of digital element 2. This operand is "DIG ELEM 2 OP".

   Writing the parameters in numerical order can now form the equation for VIRTUAL OUTPUT 3:

```
[95] DIG ELEM 2 OP
[96] Cont Ip H1c On
[97] NOT
[98] AND(2)
[99] = Virt Op 3
```

It is now possible to check that this selection of parameters will produce the required logic by converting the set of parameters into a logic diagram. The result of this process is shown below, which is compared to figure: LOGIC FOR VIRTUAL OUTPUT 3 as a check.

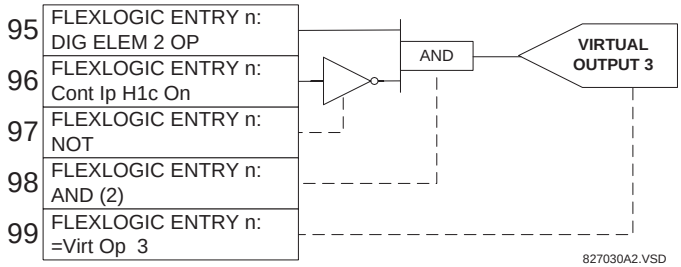

Figure 5–10: FLEXLOGIC™ EQUATION & LOGIC FOR VIRTUAL OUTPUT 3

6. Repeating the process described for VIRTUAL OUTPUT 3, select the FlexLogic™ parameters for Virtual Output 4.

99: The final output of the equation is VIRTUAL OUTPUT 4 which is parameter “= Virt Op 4".

98: The operator preceding the output is Timer 2, which is operand “TIMER 2". Note that the settings required for the timer are established in the timer programming section.

97: The operator preceding Timer 2 is OR #2, a 3-input OR, which is parameter “OR(3)”.

96: The lowest input to OR #2 is operand “Cont Ip H1c On”.

95: The center input to OR #2 is operand “TIMER 1".

94: The input to Timer 1 is operand “Virt Op 3 On".

93: The upper input to OR #2 is operand “LATCH (S,R)”.

92: There are two inputs to a latch, and the input immediately preceding the latch reset is OR #1, a 4-input OR, which is parameter “OR(4)”.

91: The lowest input to OR #1 is operand “Virt Op 3 On".

90: The input just above the lowest input to OR #1 is operand “XOR(2)”.

89: The lower input to the XOR is operand “DIG ELEM 1 PKP”.

88: The upper input to the XOR is operand “Virt Ip 1 On".

87: The input just below the upper input to OR #1 is operand “Virt Op 2 On".

86: The upper input to OR #1 is operand “Virt Op 1 On".

85: The last parameter is used to set the latch, and is operand “Virt Op 4 On".

The equation for VIRTUAL OUTPUT 4 is:

```
[85] Virt Op 4 On
[86] Virt Op 1 On
[87] Virt Op 2 On
[88] Virt Ip 1 On
[89] DIG ELEM 1 PKP
[90] XOR(2)
[91] Virt Op 3 On
[92] OR(4)
[93] LATCH (S,R)
[94] Virt Op 3 On
[95] TIMER 1
[96] Cont Ip H1c On
[97] OR(3)
[98] TIMER 2
[99] = Virt Op 4
```

It is now possible to check that the selection of parameters will produce the required logic by converting the set of parameters into a logic diagram. The result of this process is shown below, which is compared to figure: LOGIC FOR VIRTUAL OUTPUT 4, as a check.

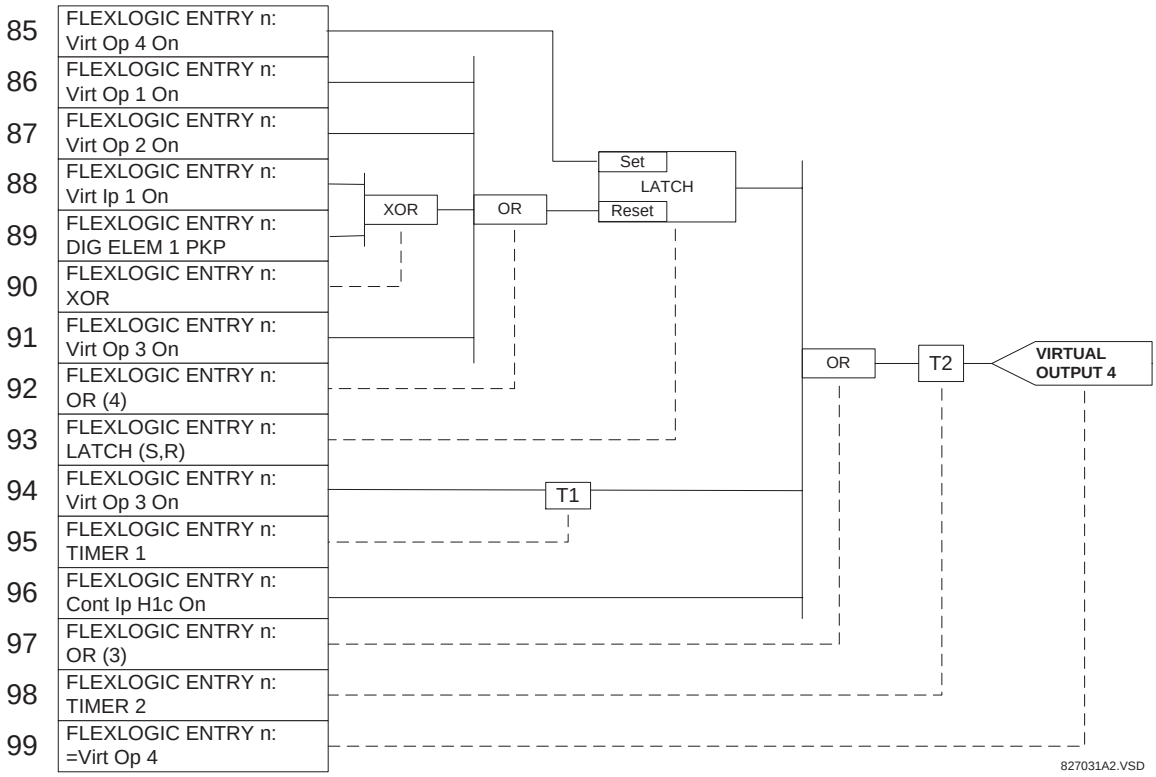

Figure 5–11: FLEXLOGIC™ EQUATION & LOGIC FOR VIRTUAL OUTPUT 4

7. Now write the complete FlexLogic™ expression required to implement the required logic, making an effort to assemble the equation in an order where Virtual Outputs that will be used as inputs to operators are created before needed. In cases where a lot of processing is required to perform considerable logic, this may be difficult to achieve, but in most cases will not cause problems because all of the logic is calculated at least 4 times per power frequency cycle. The possibility of a problem caused by sequential processing emphasizes the necessity to test the performance of FlexLogic™ before it is placed in service.

   In the following equation, Virtual Output 3 is used as an input to both Latch 1 and Timer 1 as arranged in the order shown below:

```
DIG ELEM 2 OP
Cont Ip H1c On
NOT
AND(2)
= Virt Op 3
Virt Op 4 On
Virt Op 1 On
Virt Op 2 On
Virt Ip 1 On
DIG ELEM 1 PKP
XOR(2)
Virt Op 3 On
OR(4)
LATCH (S,R)
Virt Op 3 On
TIMER 1
Cont Ip H1c On
OR(3)
```

```
TIMER 2
= Virt Op 4
END
```

In the expression above, the Virtual Output 4 input to the 4-input OR is listed before it is created. This is typical of a form of feedback, in this case, used to create a seal-in effect with the latch, and is correct.

8. The logic should always be tested after it is loaded into the relay, in the same fashion as has been used in the past. Testing can be simplified by placing an "END" operator within the overall set of FlexLogic™ equations. The equations will then only be evaluated up to the first "END" operator.

   The "On" and "Off" operands can be placed in an equation to establish a known set of conditions for test purposes, and the "INSERT" and "DELETE" commands can be used to modify equations.

5.4.5 FLEXLOGIC™ EQUATION EDITOR

PATH: SETTINGS ⇨⇩ FLEXLOGIC ⇨ FLEXLOGIC EQUATION EDITOR

```
■ FLEXLOGIC
■ EQUATION EDITOR
```

```
FLEXLOGIC ENTRY   1:
END
```

Range: FlexLogic™ parameters

↓

MESSAGE

```
FLEXLOGIC ENTRY 512:
END
```

Range: FlexLogic™ parameters

There are 512 FlexLogic™ entries available, numbered from 1 to 512, with default ‘END’ entry settings. If a "Disabled" Element is selected as a FlexLogic™ entry, the associated state flag will never be set to ‘1’. The ‘+/–‘ key may be used when editing FlexLogic™ equations from the keypad to quickly scan through the major parameter types.

5.4.6 FLEXLOGIC™ TIMERS

PATH: SETTINGS ⇨⇩ FLEXLOGIC ⇨⇩ FLEXLOGIC TIMERS ⇨ FLEXLOGIC TIMER 1(32)

```
■ FLEXLOGIC
■ TIMER  1
```

```
TIMER  1
TYPE: millisecond
```

Range: millisecond, second, minute

MESSAGE

```
TIMER  1 PICKUP
DELAY:     0
```

Range: 0 to 60000 in steps of 1

MESSAGE

```
TIMER  1 DROPOUT
DELAY:     0
```

Range: 0 to 60000 in steps of 1

There are 32 identical FlexLogic™ timers available, numbered from 1 to 32. These timers can be used as operators for FlexLogic™ equations.

TIMER 1 TYPE:

This setting is used to select the time measuring unit.

TIMER 1 PICKUP DELAY:

This setting is used to set the time delay to pickup. If a pickup delay is not required, set this function to "0".

TIMER 1 DROPOUT DELAY:

This setting is used to set the time delay to dropout. If a dropout delay is not required, set this function to "0".

5.4.7 FLEXELEMENTS™

PATH: SETTING ⇨⇩ FLEXLOGIC ⇨⇩ FLEXELEMENTS ⇨ FLEXELEMENT 1(8)

■ FLEXELEMENT 1 ■	FLEXELEMENT 1 FUNCTION: Disabled	*Range: Disabled, Enabled*
MESSAGE	FLEXELEMENT 1 NAME: FxE1	*Range: up to 6 alphanumeric characters*
MESSAGE	FLEXELEMENT 1 +IN Off	*Range: Off, any analog actual value parameter*
MESSAGE	FLEXELEMENT 1 -IN Off	*Range: Off, any analog actual value parameter*
MESSAGE	FLEXELEMENT 1 INPUT MODE: Signed	*Range: Signed, Absolute*
MESSAGE	FLEXELEMENT 1 COMP MODE: Level	*Range: Level, Delta*
MESSAGE	FLEXELEMENT 1 DIRECTION: Over	*Range: Over, Under*
MESSAGE	FLEXELEMENT 1 PICKUP: 1.000 pu	*Range: –90.000 to 90.000 pu in steps of 0.001*
MESSAGE	FLEXELEMENT 1 HYSTERESIS: 3.0%	*Range: 0.1 to 50.0% in steps of 0.1*
MESSAGE	FLEXELEMENT 1 dt UNIT: milliseconds	*Range: milliseconds, seconds, minutes*
MESSAGE	FLEXELEMENT 1 dt: 20	*Range: 20 to 86400 in steps of 1*
MESSAGE	FLEXELEMENT 1 PKP DELAY: 0.000 s	*Range: 0.000 to 65.535 sec. in steps of 0.001*
MESSAGE	FLEXELEMENT 1 RST DELAY: 0.000 s	*Range: 0.000 to 65.535 sec. in steps of 0.001*
MESSAGE	FLEXELEMENT 1 BLOCK: Off	*Range: FlexLogic™ operand*
MESSAGE	FLEXELEMENT 1 TARGET: Self-reset	*Range: Self-reset, Latched, Disabled*
MESSAGE	FLEXELEMENT 1 EVENTS: Disabled	*Range: Disabled, Enabled*

A FlexElement™ is a universal comparator that can be used to monitor any analog actual value calculated by the relay or a net difference of any two analog actual values of the same type. The effective operating signal could be treated as a signed number or its absolute value could be used as per user's choice.

The element can be programmed to respond either to a signal level or to a rate-of-change (delta) over a pre-defined period of time. The output operand is asserted when the operating signal is higher than a threshold or lower than a threshold as per user's choice.

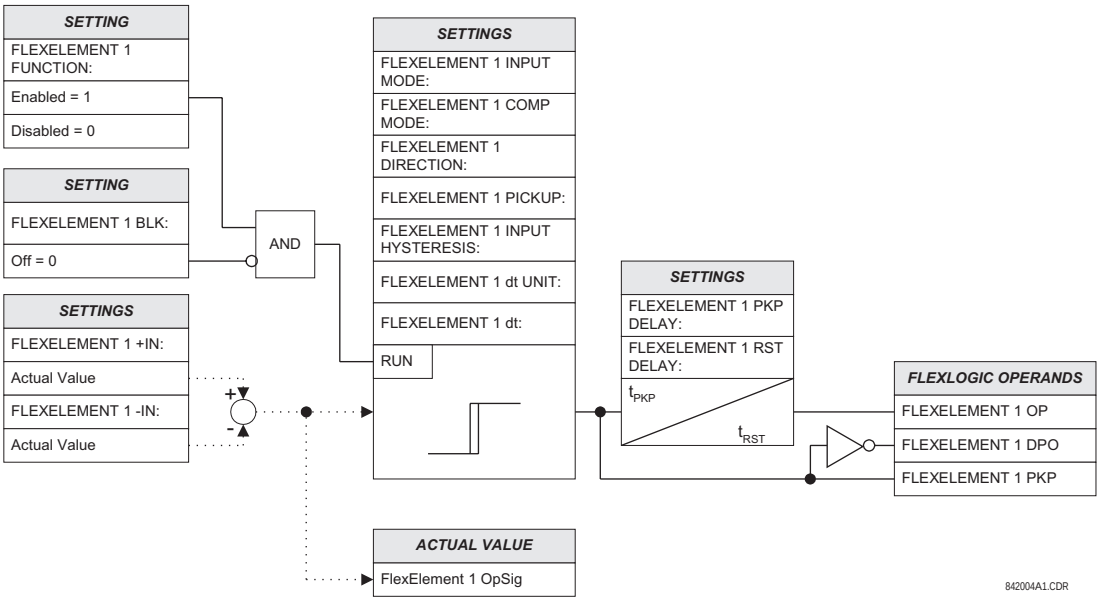

Figure 5–12: FLEXELEMENT™ SCHEME LOGIC

The **FLEXELEMENT 1 +IN** setting specifies the first (non-inverted) input to the FlexElement™. Zero is assumed as the input if this setting is set to "Off". For proper operation of the element at least one input must be selected. Otherwise, the element will not assert its output operands.

This **FLEXELEMENT 1 –IN** setting specifies the second (inverted) input to the FlexElement™. Zero is assumed as the input if this setting is set to "Off". For proper operation of the element at least one input must be selected. Otherwise, the element will not assert its output operands. This input should be used to invert the signal if needed for convenience, or to make the element respond to a differential signal such as for a top-bottom oil temperature differential alarm. The element will not operate if the two input signals are of different types, for example if one tries to use active power and phase angle to build the effective operating signal.

The element responds directly to the differential signal if the **FLEXELEMENT 1 INPUT MODE** setting is set to "Signed". The element responds to the absolute value of the differential signal if this setting is set to "Absolute". Sample applications for the "Absolute" setting include monitoring the angular difference between two phasors with a symmetrical limit angle in both directions; monitoring power regardless of its direction, or monitoring a trend regardless of whether the signal increases of decreases.

The element responds directly to its operating signal – as defined by the **FLEXELEMENT 1 +IN**, **FLEXELEMENT 1 –IN** and **FLEXELEMENT 1 INPUT MODE** settings – if the **FLEXELEMENT 1 COMP MODE** setting is set to "Threshold". The element responds to the rate of change of its operating signal if the **FLEXELEMENT 1 COMP MODE** setting is set to "Delta". In this case the **FLEXELEMENT 1 dt UNIT** and **FLEXELEMENT 1 dt** settings specify how the rate of change is derived.

The **FLEXELEMENT 1 DIRECTION** setting enables the relay to respond to either high or low values of the operating signal. The following figure explains the application of the **FLEXELEMENT 1 DIRECTION**, **FLEXELEMENT 1 PICKUP** and **FLEXELEMENT 1 HYSTERESIS** settings.

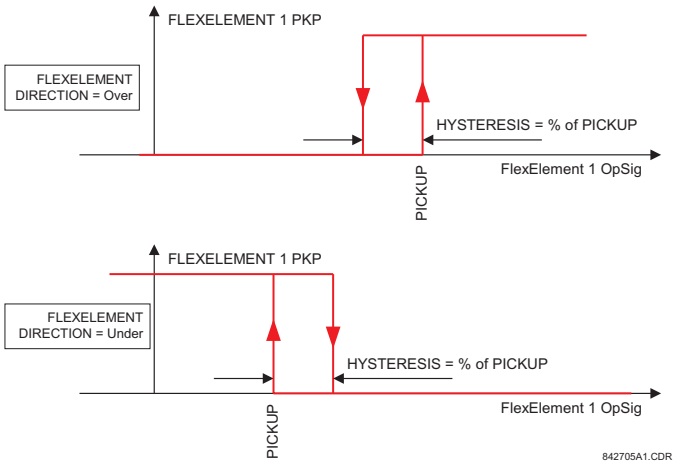

Figure 5–13: FLEXELEMENT™ DIRECTION, PICKUP, AND HYSTERESIS

In conjunction with the **FLEXELEMENT 1 INPUT MODE** setting the element could be programmed to provide two extra characteristics as shown in the figure below.

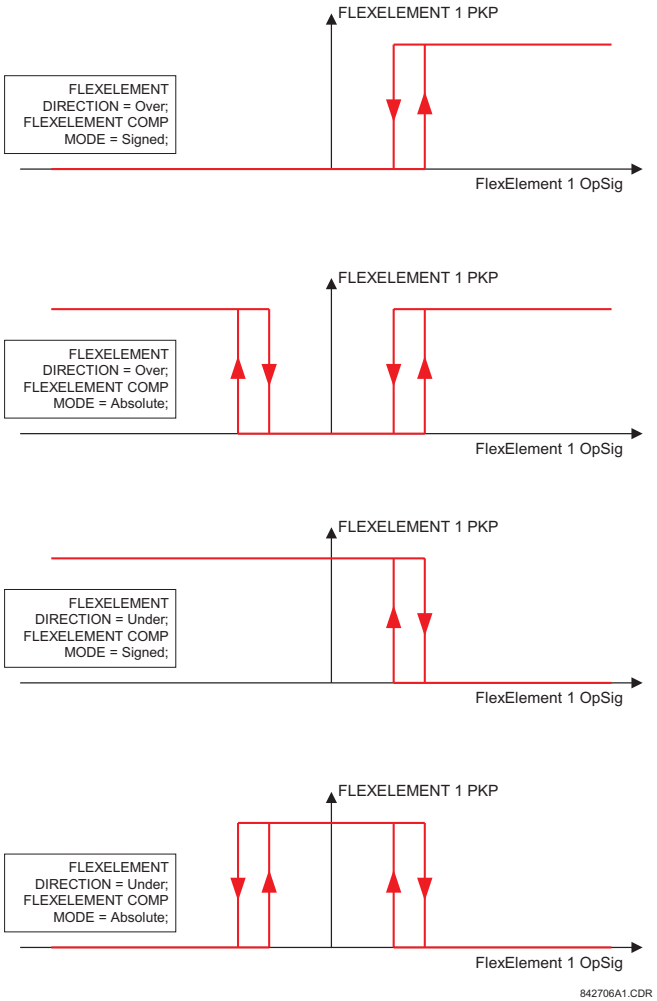

Figure 5–14: FLEXELEMENT™ INPUT MODE SETTING

The **FLEXELEMENT 1 PICKUP** setting specifies the operating threshold for the effective operating signal of the element. If set to "Over", the element picks up when the operating signal exceeds the **FLEXELEMENT 1 PICKUP** value. If set to "Under", the element picks up when the operating signal falls below the **FLEXELEMENT 1 PICKUP** value.

The **FLEXELEMENT 1 HYSTERESIS** setting controls the element dropout. It should be noticed that both the operating signal and the pickup threshold can be negative facilitating applications such as reverse power alarm protection. The FlexElement™ can be programmed to work with all analog actual values measured by the relay. The **FLEXELEMENT 1 PICKUP** setting is entered in pu values using the following definitions of the base units:

Table 5–14: FLEXELEMENT™ BASE UNITS

dcmA	BASE = maximum value of the **DCMA INPUT MAX** setting for the two transducers configured under the +IN and –IN inputs.
FREQUENCY	f_{BASE} = 1 Hz
PHASE ANGLE	φ_{BASE} = 360 degrees (see the UR angle referencing convention)
POWER FACTOR	PF_{BASE} = 1.00
RTDs	BASE = 100°C
SOURCE CURRENT	I_{BASE} = maximum nominal primary RMS value of the +IN and –IN inputs
SOURCE ENERGY (SRC X Positive Watthours) (SRC X Negative Watthours) (SRC X Positive Varhours) (SRC X Negative Varhours)	E_{BASE} = 10000 MWh or MVAh, respectively
SOURCE POWER	P_{BASE} = maximum value of $V_{BASE} \times I_{BASE}$ for the +IN and –IN inputs
SOURCE VOLTAGE	V_{BASE} = maximum nominal primary RMS value of the +IN and –IN inputs

The **FLEXELEMENT 1 HYSTERESIS** setting defines the pickup–dropout relation of the element by specifying the width of the hysteresis loop as a percentage of the pickup value as shown in the FLEXELEMENT DIRECTION, PICKUP, AND HYSTERESIS diagram.

The **FLEXELEMENT 1 DT UNIT** setting specifies the time unit for the setting **FLEXELEMENT 1 dt**. This setting is applicable only if **FLEXELEMENT 1 COMP MODE** is set to "Delta". The **FLEXELEMENT 1 DT** setting specifies duration of the time interval for the rate of change mode of operation. This setting is applicable only if **FLEXELEMENT 1 COMP MODE** is set to "Delta".

This **FLEXELEMENT 1 PKP DELAY** setting specifies the pickup delay of the element. The **FLEXELEMENT 1 RST DELAY** setting specifies the reset delay of the element.

5.5.1 OVERVIEW

Each protection element can be assigned up to 8 different sets of settings according to SETTING GROUP designations 1 to 8. The performance of these elements is defined by the active SETTING GROUP at a given time. Multiple setting groups allow the user to conveniently change protection settings for different operating situations (e.g. altered power system configuration, season of the year). The active setting group can be preset or selected via the SETTING GROUPS menu (see the CONTROL ELEMENTS section). See also the INTRODUCTION TO ELEMENTS section at the front of this chapter.

5.5.2 SETTING GROUP

PATH: SETTINGS ⇩ GROUPED ELEMENTS ⇨ SETTING GROUP 1(8)

```
■ SETTING GROUP 1
■
```

■ PHASE CURRENT ■	See page 5-53.
MESSAGE	■ NEUTRAL CURRENT ■	See page 5-56.
MESSAGE	■ GROUND CURRENT ■	See page 5-58.
MESSAGE	■ VOLTAGE ELEMENTS ■	See page 5-60.

Each of the 8 SETTING GROUP menus is identical. SETTING GROUP 1 (the default active group) automatically becomes active if no other group is active (see the CONTROL ELEMENTS section for additional details).

5.5.3 CURRENT ELEMENTS

PATH: SETTINGS ⇨⇩ GROUPED ELEMENTS ⇨ SETTING GROUP 1(8) ⇨

```
■ PHASE CURRENT
■
```

■ PHASE TOC1 ■
MESSAGE	■ PHASE TOC2 ■
MESSAGE	■ PHASE TOC3 ■
MESSAGE	■ PHASE TOC4 ■
MESSAGE	■ PHASE TOC5 ■
MESSAGE	■ PHASE TOC6 ■
MESSAGE	■ PHASE IOC1 ■
MESSAGE	■ PHASE IOC2 ■
MESSAGE	■ PHASE IOC3 ■
MESSAGE	■ PHASE IOC4 ■
MESSAGE	■ PHASE IOC5 ■

MESSAGE
■ PHASE IOC6
■

MESSAGE
■ PHASE IOC7
■

MESSAGE
■ PHASE IOC8
■

MESSAGE
■ PHASE IOC9
■

MESSAGE
■ PHASE IOC10
■

MESSAGE
■ PHASE IOC11
■

MESSAGE
■ PHASE IOC12
■

■ NEUTRAL CURRENT
■

■ NEUTRAL TOC1
■

MESSAGE
■ NEUTRAL TOC2
■

MESSAGE
■ NEUTRAL TOC3
■

MESSAGE
■ NEUTRAL TOC4
■

MESSAGE
■ NEUTRAL TOC5
■

MESSAGE
■ NEUTRAL TOC6
■

MESSAGE
■ NEUTRAL IOC1
■

MESSAGE
■ NEUTRAL IOC2
■

MESSAGE
■ NEUTRAL IOC3
■

MESSAGE
■ NEUTRAL IOC4
■

MESSAGE
■ NEUTRAL IOC5
■

MESSAGE
■ NEUTRAL IOC6
■

MESSAGE
■ NEUTRAL IOC7
■

MESSAGE
■ NEUTRAL IOC8
■

MESSAGE
■ NEUTRAL IOC9
■

```
                                  NEUTRAL IOC10
MESSAGE
                                  NEUTRAL IOC11
MESSAGE
                                  NEUTRAL IOC12
MESSAGE
GROUND CURRENT                    GROUND TOC1
                                  GROUND TOC2
MESSAGE
                                  GROUND TOC3
MESSAGE
                                  GROUND TOC4
MESSAGE
                                  GROUND TOC5
MESSAGE
                                  GROUND TOC6
MESSAGE
                                  GROUND IOC1
MESSAGE
                                  GROUND IOC2
MESSAGE
                                  GROUND IOC3
MESSAGE
                                  GROUND IOC4
MESSAGE
                                  GROUND IOC5
MESSAGE
                                  GROUND IOC6
MESSAGE
                                  GROUND IOC7
MESSAGE
                                  GROUND IOC8
MESSAGE
                                  GROUND IOC9
MESSAGE
                                  GROUND IOC10
MESSAGE
                                  GROUND IOC11
MESSAGE
                                  GROUND IOC12
MESSAGE
```

The relay current elements menu consists of time overcurrent (TOC) , instantaneous overcurrent (IOC), and directional current elements. These elements can be used for tripping, alarming, or other functions.

5.5.4 INVERSE TIME OVERCURRENT CURVE CHARACTERISTICS

The inverse time overcurrent curves used by the TOC (time overcurrent) Current Elements are the IEEE, IEC, GE Type IAC, and I^2t standard curve shapes. This allows for simplified coordination with downstream devices. If however, none of these curve shapes is adequate, the FlexCurve™ may be used to customize the inverse time curve characteristics. The Definite Time curve is also an option that may be appropriate if only simple protection is required.

Table 5–15: OVERCURRENT CURVE TYPES

IEEE	IEC	GE TYPE IAC	OTHER
IEEE Extremely Inv.	IEC Curve A (BS142)	IAC Extremely Inv.	I^2t
IEEE Very Inverse	IEC Curve B (BS142)	IAC Very Inverse	FlexCurve A
IEEE Moderately Inv.	IEC Curve C (BS142)	IAC Inverse	FlexCurve B
	IEC Short Inverse	IAC Short Inverse	Definite Time

A time dial multiplier setting allows selection of a multiple of the base curve shape (where the time dial multiplier = 1) with the curve shape (**CURVE**) setting. Unlike the electromechanical time dial equivalent, operate times are directly proportional to the time multiplier (**TD MULTIPLIER**) setting value. For example, all times for a multiplier of 10 are 10 times the multiplier 1 or base curve values. Setting the multiplier to zero results in an instantaneous response to all current levels above pickup.

Time overcurrent time calculations are made with an internal “energy capacity” memory variable. When this variable indicates that the energy capacity has reached 100%, a time overcurrent element will operate. If less than 100% energy capacity is accumulated in this variable and the current falls below the dropout threshold of 97 to 98% of the pickup value, the variable must be reduced. Two methods of this resetting operation are available: “Instantaneous” and “Timed”. The Instantaneous selection is intended for applications with other relays, such as most static relays, which set the energy capacity directly to zero when the current falls below the reset threshold. The Timed selection can be used where the relay must coordinate with electromechanical relays. With this setting, the energy capacity variable is decremented according to the equation provided.

NOTE

Graphs of standard time-current curves on 11” × 17” log-log graph paper are available upon request from the GE Power Management literature department. The original files are also available in PDF format on the UR Software Installation CD and the GE Power Management Web Page.

IEEE CURVES:

The IEEE time overcurrent curve shapes conform to industry standards and the IEEE C37.112-1996 curve classifications for extremely, very, and moderately inverse. The IEEE curves are derived from the formulae:

$$T = TDM \times \left[\frac{A}{\left(\frac{I}{I_{pickup}}\right)^{p} - 1} + B \right] \qquad T_{RESET} = TDM \times \left[\frac{t_r}{\left(\frac{I}{I_{pickup}}\right)^{2} - 1} \right]$$

where: T = Operate Time (sec.)
TDM = Multiplier Setting
I = Input Current
I_{pickup} = Pickup Current Setting
A, B, p = Constants
T_{RESET} = reset time in sec. (assuming energy capacity is 100% and RESET: Timed)
t_r = characteristic constant

Table 5–16: IEEE INVERSE TIME CURVE CONSTANTS

IEEE CURVE SHAPE	A	B	P	T_R
IEEE EXTREMELY INVERSE	28.2	0.1217	2.0000	29.1
IEEE VERY INVERSE	19.61	0.491	2.0000	21.6
IEEE MODERATELY INVERSE	0.0515	0.1140	0.02000	4.85

Table 5–17: IEEE CURVE TRIP TIMES (IN SECONDS)

MULTIPLIER (TDM)	CURRENT (I / I_{pickup})									
	1.5	2.0	3.0	4.0	5.0	6.0	7.0	8.0	9.0	10.0
IEEE EXTREMELY INVERSE										
0.5	11.341	4.761	1.823	1.001	0.648	0.464	0.355	0.285	0.237	0.203
1.0	22.682	9.522	3.647	2.002	1.297	0.927	0.709	0.569	0.474	0.407
2.0	45.363	19.043	7.293	4.003	2.593	1.855	1.418	1.139	0.948	0.813
4.0	90.727	38.087	14.587	8.007	5.187	3.710	2.837	2.277	1.897	1.626
6.0	136.090	57.130	21.880	12.010	7.780	5.564	4.255	3.416	2.845	2.439
8.0	181.454	76.174	29.174	16.014	10.374	7.419	5.674	4.555	3.794	3.252
10.0	226.817	95.217	36.467	20.017	12.967	9.274	7.092	5.693	4.742	4.065
IEEE VERY INVERSE										
0.5	8.090	3.514	1.471	0.899	0.654	0.526	0.450	0.401	0.368	0.345
1.0	16.179	7.028	2.942	1.798	1.308	1.051	0.900	0.802	0.736	0.689
2.0	32.358	14.055	5.885	3.597	2.616	2.103	1.799	1.605	1.472	1.378
4.0	64.716	28.111	11.769	7.193	5.232	4.205	3.598	3.209	2.945	2.756
6.0	97.074	42.166	17.654	10.790	7.849	6.308	5.397	4.814	4.417	4.134
8.0	129.432	56.221	23.538	14.387	10.465	8.410	7.196	6.418	5.889	5.513
10.0	161.790	70.277	29.423	17.983	13.081	10.513	8.995	8.023	7.361	6.891
IEEE MODERATELY INVERSE										
0.5	3.220	1.902	1.216	0.973	0.844	0.763	0.706	0.663	0.630	0.603
1.0	6.439	3.803	2.432	1.946	1.688	1.526	1.412	1.327	1.260	1.207
2.0	12.878	7.606	4.864	3.892	3.377	3.051	2.823	2.653	2.521	2.414
4.0	25.756	15.213	9.729	7.783	6.753	6.102	5.647	5.307	5.041	4.827
6.0	38.634	22.819	14.593	11.675	10.130	9.153	8.470	7.960	7.562	7.241
8.0	51.512	30.426	19.458	15.567	13.507	12.204	11.294	10.614	10.083	9.654
10.0	64.390	38.032	24.322	19.458	16.883	15.255	14.117	13.267	12.604	12.068

IEC CURVES

For European applications, the relay offers three standard curves defined in IEC 255-4 and British standard BS142. These are defined as IEC Curve A, IEC Curve B, and IEC Curve C. The formulae for these curves are:

$$T = TDM \times \left[\frac{K}{\left(\frac{I}{I_{pickup}}\right)^{E} - 1} \right] \qquad T_{RESET} = TDM \times \left[\frac{t_r}{\left(\frac{I}{I_{pickup}}\right)^{2} - 1} \right]$$

where: T = Operate Time (sec.) TDM = Multiplier Setting I = Input Current
I_{pickup} = Pickup Current Setting K, E = Constants t_r = Characteristic Constant
T_{RESET} = Reset Time in sec. (assuming energy capacity is 100% and RESET: Timed)

Table 5–18: IEC (BS) INVERSE TIME CURVE CONSTANTS

IEC (BS) CURVE SHAPE	K	E	T_R
IEC CURVE A (BS142)	0.140	0.020	9.7
IEC CURVE B (BS142)	13.500	1.000	43.2
IEC CURVE C (BS142)	80.000	2.000	58.2
IEC SHORT INVERSE	0.050	0.040	0.500

Table 5–19: IEC CURVE TRIP TIMES (IN SECONDS)

MULTIPLIER (TDM)	CURRENT (I / I_{pickup})									
	1.5	2.0	3.0	4.0	5.0	6.0	7.0	8.0	9.0	10.0
IEC CURVE A										
0.05	0.860	0.501	0.315	0.249	0.214	0.192	0.176	0.165	0.156	0.149
0.10	1.719	1.003	0.630	0.498	0.428	0.384	0.353	0.330	0.312	0.297
0.20	3.439	2.006	1.260	0.996	0.856	0.767	0.706	0.659	0.623	0.594
0.40	6.878	4.012	2.521	1.992	1.712	1.535	1.411	1.319	1.247	1.188
0.60	10.317	6.017	3.781	2.988	2.568	2.302	2.117	1.978	1.870	1.782
0.80	13.755	8.023	5.042	3.984	3.424	3.070	2.822	2.637	2.493	2.376
1.00	17.194	10.029	6.302	4.980	4.280	3.837	3.528	3.297	3.116	2.971
IEC CURVE B										
0.05	1.350	0.675	0.338	0.225	0.169	0.135	0.113	0.096	0.084	0.075
0.10	2.700	1.350	0.675	0.450	0.338	0.270	0.225	0.193	0.169	0.150
0.20	5.400	2.700	1.350	0.900	0.675	0.540	0.450	0.386	0.338	0.300
0.40	10.800	5.400	2.700	1.800	1.350	1.080	0.900	0.771	0.675	0.600
0.60	16.200	8.100	4.050	2.700	2.025	1.620	1.350	1.157	1.013	0.900
0.80	21.600	10.800	5.400	3.600	2.700	2.160	1.800	1.543	1.350	1.200
1.00	27.000	13.500	6.750	4.500	3.375	2.700	2.250	1.929	1.688	1.500
IEC CURVE C										
0.05	3.200	1.333	0.500	0.267	0.167	0.114	0.083	0.063	0.050	0.040
0.10	6.400	2.667	1.000	0.533	0.333	0.229	0.167	0.127	0.100	0.081
0.20	12.800	5.333	2.000	1.067	0.667	0.457	0.333	0.254	0.200	0.162
0.40	25.600	10.667	4.000	2.133	1.333	0.914	0.667	0.508	0.400	0.323
0.60	38.400	16.000	6.000	3.200	2.000	1.371	1.000	0.762	0.600	0.485
0.80	51.200	21.333	8.000	4.267	2.667	1.829	1.333	1.016	0.800	0.646
1.00	64.000	26.667	10.000	5.333	3.333	2.286	1.667	1.270	1.000	0.808
IEC SHORT TIME										
0.05	0.153	0.089	0.056	0.044	0.038	0.034	0.031	0.029	0.027	0.026
0.10	0.306	0.178	0.111	0.088	0.075	0.067	0.062	0.058	0.054	0.052
0.20	0.612	0.356	0.223	0.175	0.150	0.135	0.124	0.115	0.109	0.104
0.40	1.223	0.711	0.445	0.351	0.301	0.269	0.247	0.231	0.218	0.207
0.60	1.835	1.067	0.668	0.526	0.451	0.404	0.371	0.346	0.327	0.311
0.80	2.446	1.423	0.890	0.702	0.602	0.538	0.494	0.461	0.435	0.415
1.00	3.058	1.778	1.113	0.877	0.752	0.673	0.618	0.576	0.544	0.518

IAC CURVES:

The curves for the General Electric type IAC relay family are derived from the formulae:

$$T = \text{TDM} \times \left[A + \frac{B}{\left(\frac{I}{I_{pickup}} - C\right)} + \frac{D}{\left(\frac{I}{I_{pickup}} - C\right)^2} + \frac{E}{\left(\frac{I}{I_{pickup}} - C\right)^3} \right] \qquad T_{RESET} = TDM \times \left[\frac{t_r}{\left(\frac{I}{I_{pickup}}\right)^2 - 1} \right]$$

where: T = Operate Time (sec.) TDM = Multiplier Setting I = Input Current
I_{pickup} = Pickup Current Setting A *to* E = Constants t_r = Characteristic Constant
T_{RESET} = Reset Time in sec. (assuming energy capacity is 100% and RESET: Timed)

Table 5–20: GE TYPE IAC INVERSE TIME CURVE CONSTANTS

IAC CURVE SHAPE	A	B	C	D	E	T_R
IAC EXTREME INVERSE	0.0040	0.6379	0.6200	1.7872	0.2461	6.008
IAC VERY INVERSE	0.0900	0.7955	0.1000	–1.2885	7.9586	4.678
IAC INVERSE	0.2078	0.8630	0.8000	–0.4180	0.1947	0.990
IAC SHORT INVERSE	0.0428	0.0609	0.6200	–0.0010	0.0221	0.222

Table 5–21: IAC CURVE TRIP TIMES

MULTIPLIER (TDM)	CURRENT (I / I_{pickup})									
	1.5	2.0	3.0	4.0	5.0	6.0	7.0	8.0	9.0	10.0
IAC EXTREMELY INVERSE										
0.5	1.699	0.749	0.303	0.178	0.123	0.093	0.074	0.062	0.053	0.046
1.0	3.398	1.498	0.606	0.356	0.246	0.186	0.149	0.124	0.106	0.093
2.0	6.796	2.997	1.212	0.711	0.491	0.372	0.298	0.248	0.212	0.185
4.0	13.591	5.993	2.423	1.422	0.983	0.744	0.595	0.495	0.424	0.370
6.0	20.387	8.990	3.635	2.133	1.474	1.115	0.893	0.743	0.636	0.556
8.0	27.183	11.987	4.846	2.844	1.966	1.487	1.191	0.991	0.848	0.741
10.0	33.979	14.983	6.058	3.555	2.457	1.859	1.488	1.239	1.060	0.926
IAC VERY INVERSE										
0.5	1.451	0.656	0.269	0.172	0.133	0.113	0.101	0.093	0.087	0.083
1.0	2.901	1.312	0.537	0.343	0.266	0.227	0.202	0.186	0.174	0.165
2.0	5.802	2.624	1.075	0.687	0.533	0.453	0.405	0.372	0.349	0.331
4.0	11.605	5.248	2.150	1.374	1.065	0.906	0.810	0.745	0.698	0.662
6.0	17.407	7.872	3.225	2.061	1.598	1.359	1.215	1.117	1.046	0.992
8.0	23.209	10.497	4.299	2.747	2.131	1.813	1.620	1.490	1.395	1.323
10.0	29.012	13.121	5.374	3.434	2.663	2.266	2.025	1.862	1.744	1.654
IAC INVERSE										
0.5	0.578	0.375	0.266	0.221	0.196	0.180	0.168	0.160	0.154	0.148
1.0	1.155	0.749	0.532	0.443	0.392	0.360	0.337	0.320	0.307	0.297
2.0	2.310	1.499	1.064	0.885	0.784	0.719	0.674	0.640	0.614	0.594
4.0	4.621	2.997	2.128	1.770	1.569	1.439	1.348	1.280	1.229	1.188
6.0	6.931	4.496	3.192	2.656	2.353	2.158	2.022	1.921	1.843	1.781
8.0	9.242	5.995	4.256	3.541	3.138	2.878	2.695	2.561	2.457	2.375
10.0	11.552	7.494	5.320	4.426	3.922	3.597	3.369	3.201	3.072	2.969
IAC SHORT INVERSE										
0.5	0.072	0.047	0.035	0.031	0.028	0.027	0.026	0.026	0.025	0.025
1.0	0.143	0.095	0.070	0.061	0.057	0.054	0.052	0.051	0.050	0.049
2.0	0.286	0.190	0.140	0.123	0.114	0.108	0.105	0.102	0.100	0.099
4.0	0.573	0.379	0.279	0.245	0.228	0.217	0.210	0.204	0.200	0.197
6.0	0.859	0.569	0.419	0.368	0.341	0.325	0.314	0.307	0.301	0.296
8.0	1.145	0.759	0.559	0.490	0.455	0.434	0.419	0.409	0.401	0.394
10.0	1.431	0.948	0.699	0.613	0.569	0.542	0.524	0.511	0.501	0.493

I2t CURVES:

The curves for the I^2t are derived from the formulae:

$$T = \text{TDM} \times \left[\frac{100}{\left(\frac{I}{I_{pickup}}\right)^2} \right] \qquad T_{RESET} = \text{TDM} \times \left[\frac{100}{\left(\frac{I}{I_{pickup}}\right)^{-2}} \right]$$

where: T = Operate Time (sec.)
TDM = Multiplier Setting
I = Input Current
I_{pickup} = Pickup Current Setting
T_{RESET} = Reset Time in sec. (assuming energy capacity is 100% and RESET: Timed)

Table 5–22: I^2t CURVE TRIP TIMES

MULTIPLIER (TDM)	CURRENT (I / I_{pickup})									
	1.5	**2.0**	**3.0**	**4.0**	**5.0**	**6.0**	**7.0**	**8.0**	**9.0**	**10.0**
0.01	0.44	0.25	0.11	0.06	0.04	0.03	0.02	0.02	0.01	0.01
0.10	4.44	2.50	1.11	0.63	0.40	0.28	0.20	0.16	0.12	0.10
1.00	44.44	25.00	11.11	6.25	4.00	2.78	2.04	1.56	1.23	1.00
10.00	444.44	250.00	111.11	62.50	40.00	27.78	20.41	15.63	12.35	10.00
100.00	4444.4	2500.0	1111.1	625.00	400.00	277.78	204.08	156.25	123.46	100.00
600.00	26666.7	15000.0	6666.7	3750.0	2400.0	1666.7	1224.5	937.50	740.74	600.00

5

FLEXCURVE™:

The custom FlexCurve™ is described in detail in the FLEXCURVE™ section of this chapter. The curve shapes for the FlexCurves™ are derived from the formulae:

$$T = \text{TDM} \times \left[\text{FlexcurveTime@}\left(\frac{I}{I_{pickup}}\right) \right] \qquad \text{When } \left(\frac{I}{I_{pickup}}\right) \geq 1.00$$

$$T_{RESET} = \text{TDM} \times \left[\text{FlexcurveTime@}\left(\frac{I}{I_{pickup}}\right) \right] \qquad \text{When } \left(\frac{I}{I_{pickup}}\right) \leq 0.98$$

where: T = Operate Time (sec.)
TDM = Multiplier Setting
I = Input Current
I_{pickup} = Pickup Current Setting
T_{RESET} = Reset Time in seconds (assuming energy capacity is 100% and RESET: Timed)

DEFINITE TIME CURVE:

The Definite Time curve shape operates as soon as the pickup level is exceeded for a specified period of time. The base definite time curve delay is in seconds. The curve multiplier of 0.00 to 600.00 makes this delay adjustable from instantaneous to 600.00 seconds in steps of 10 ms.

T = TDM in seconds, when $I > I_{pickup}$

T_{RESET} = –TDM in seconds

where: T = Operate Time (sec.)
TDM = Multiplier Setting
I = Input Current
I_{pickup} = Pickup Current Setting
T_{RESET} = Reset Time in seconds (assuming energy capacity is 100% and RESET: Timed)

a) PHASE TOC1 through TOC6 (PHASE TIME OVERCURRENT: ANSI 51P)

PATH: SETTINGS ⇨⇩ GROUPED ELEMENTS ⇨ SETTING GROUP 1(8) ⇨ PHASE CURRENT ⇨ PHASE TOC1

■ PHASE TOC1 ■		PHASE TOC1 FUNCTION: Disabled	*Range: Disabled, Enabled*
	MESSAGE	PHASE TOC1 SIGNAL SOURCE: SRC 1	*Range: SRC 1, SRC 2,..., SRC 6*
	MESSAGE	PHASE TOC1 INPUT: Phasor	*Range: Phasor, RMS*
	MESSAGE	PHASE TOC1 PICKUP: 1.000 pu	*Range: 0.000 to 30.000 pu in steps of 0.001*
	MESSAGE	PHASE TOC1 CURVE: IEEE Mod Inv	*Range: See OVERCURRENT CURVE TYPES table*
	MESSAGE	PHASE TOC1 TD MULTIPLIER: 1.00	*Range: 0.00 to 600.00 in steps of 0.01*
	MESSAGE	PHASE TOC1 RESET: Instantaneous	*Range: Instantaneous, Timed*
	MESSAGE	PHASE TOC1 VOLTAGE RESTRAINT: Disabled	*Range: Disabled, Enabled*
	MESSAGE	PHASE TOC1 BLOCK A: Off	*Range: FlexLogic™ operand*
	MESSAGE	PHASE TOC1 BLOCK B: Off	*Range: FlexLogic™ operand*
	MESSAGE	PHASE TOC1 BLOCK C: Off	*Range: FlexLogic™ operand*
	MESSAGE	PHASE TOC1 TARGET: Self-reset	*Range: Self-reset, Latched, Disabled*
	MESSAGE	PHASE TOC1 EVENTS: Disabled	*Range: Disabled, Enabled*

The phase time overcurrent element can provide a desired time-delay operating characteristic versus the applied current or be used as a simple Definite Time element. The phase current input quantities may be programmed as fundamental phasor magnitude or total waveform RMS magnitude as required by the application.

Two methods of resetting operation are available: “Timed” and “Instantaneous” (refer to the INVERSE TOC CURVE CHARACTERISTICS section for details on curve setup, trip times and reset operation). When the element is blocked, the time accumulator will reset according to the reset characteristic. For example, if the element reset characteristic is set to "Instantaneous" and the element is blocked, the time accumulator will be cleared immediately.

The **PHASE TOC1 PICKUP** setting can be dynamically reduced by a voltage restraint feature (when enabled). This is accomplished via the multipliers (Mvr) corresponding to the phase-phase voltages of the voltage restraint characteristic curve (see the figure below); the pickup level is calculated as ‘Mvr’ times the PICKUP setting. If the voltage restraint feature is disabled, the pickup level always remains at the setting value.

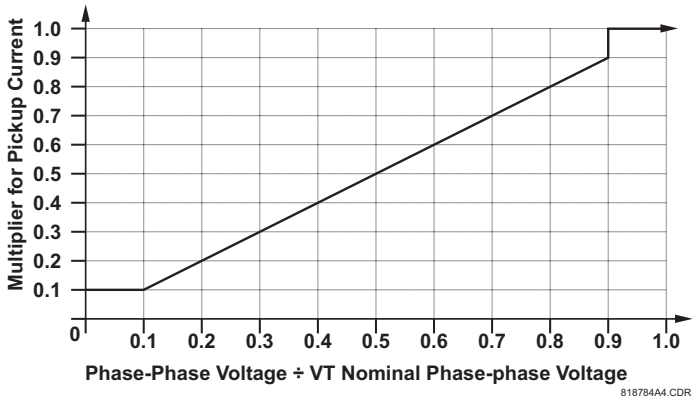

Figure 5–15: VOLTAGE RESTRAINT CHARACTERISTIC FOR PHASE TOC

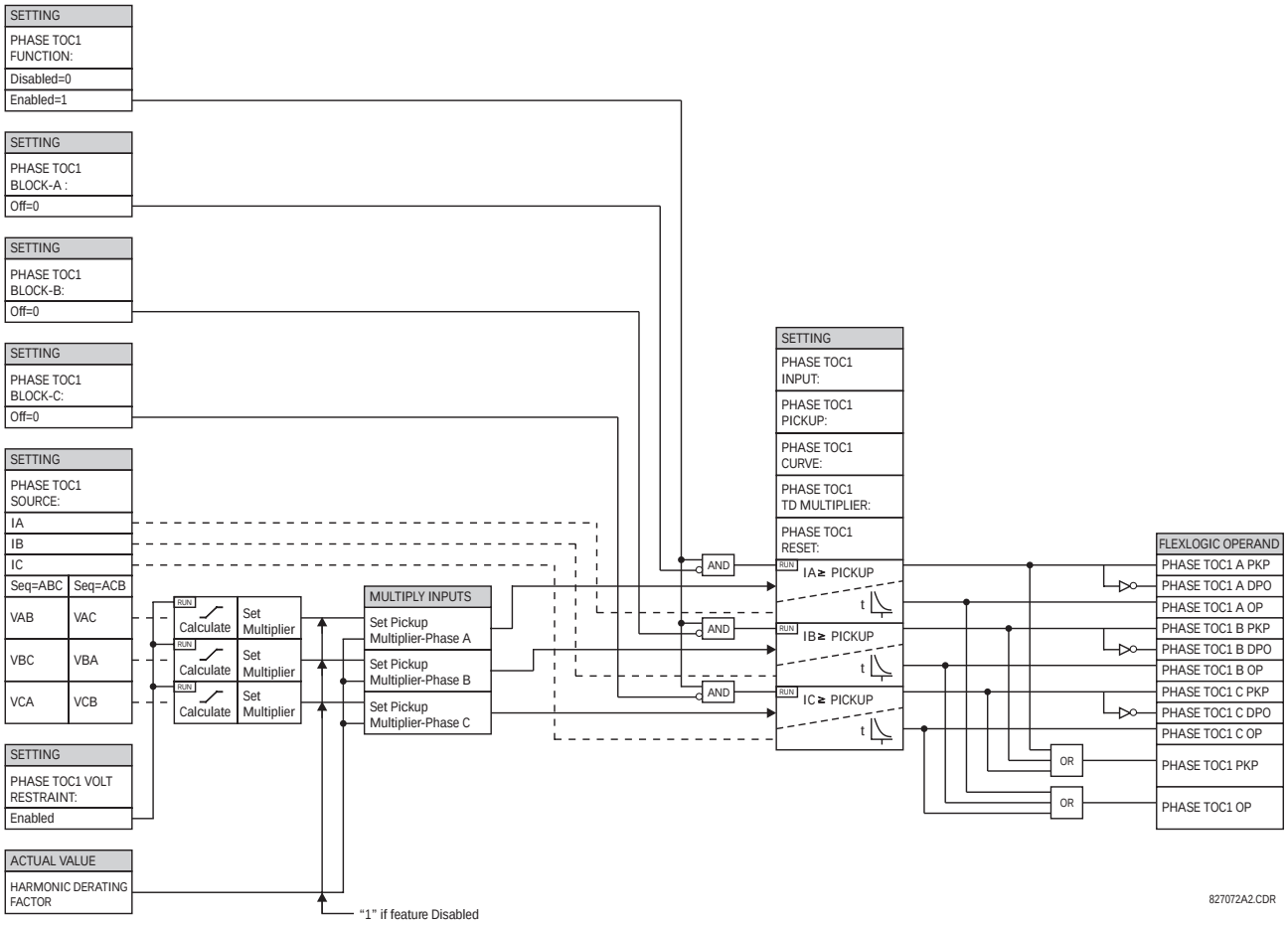

Figure 5–16: PHASE TOC1 SCHEME LOGIC

b) PHASE IOC1 through IOC12 (PHASE INSTANTANEOUS OVERCURRENT: ANSI 50P)

PATH: SETTINGS ⇨⇩ GROUPED ELEMENTS ⇨ SETTING GROUP 1(8) ⇨ PHASE CURRENT ⇨ PHASE IOC 1

■ PHASE IOC1 ■	PHASE IOC1 FUNCTION: Disabled	*Range: Disabled, Enabled*
MESSAGE	PHASE IOC1 SIGNAL SOURCE: SRC 1	*Range: SRC 1, SRC 2,..., SRC 6*
MESSAGE	PHASE IOC1 PICKUP: 1.000 pu	*Range: 0.000 to 30.000 pu in steps of 0.001*
MESSAGE	PHASE IOC1 PICKUP DELAY: 0.00 s	*Range: 0.00 to 600.00 in steps of 0.01*
MESSAGE	PHASE IOC1 RESET DELAY: 0.00 s	*Range: 0.00 to 600.00 in steps of 0.01*
MESSAGE	PHASE IOC1 BLOCK A: Off	*Range: FlexLogic™ operand*
MESSAGE	PHASE IOC1 BLOCK B: Off	*Range: FlexLogic™ operand*
MESSAGE	PHASE IOC1 BLOCK C: Off	*Range: FlexLogic™ operand*
MESSAGE	PHASE IOC1 TARGET: Self-reset	*Range: Self-reset, Latched, Disabled*
MESSAGE	PHASE IOC1 EVENTS: Disabled	*Range: Disabled, Enabled*

The phase instantaneous overcurrent element may be used as an instantaneous element with no intentional delay or as a Definite Time element. The input current is the fundamental phasor magnitude.

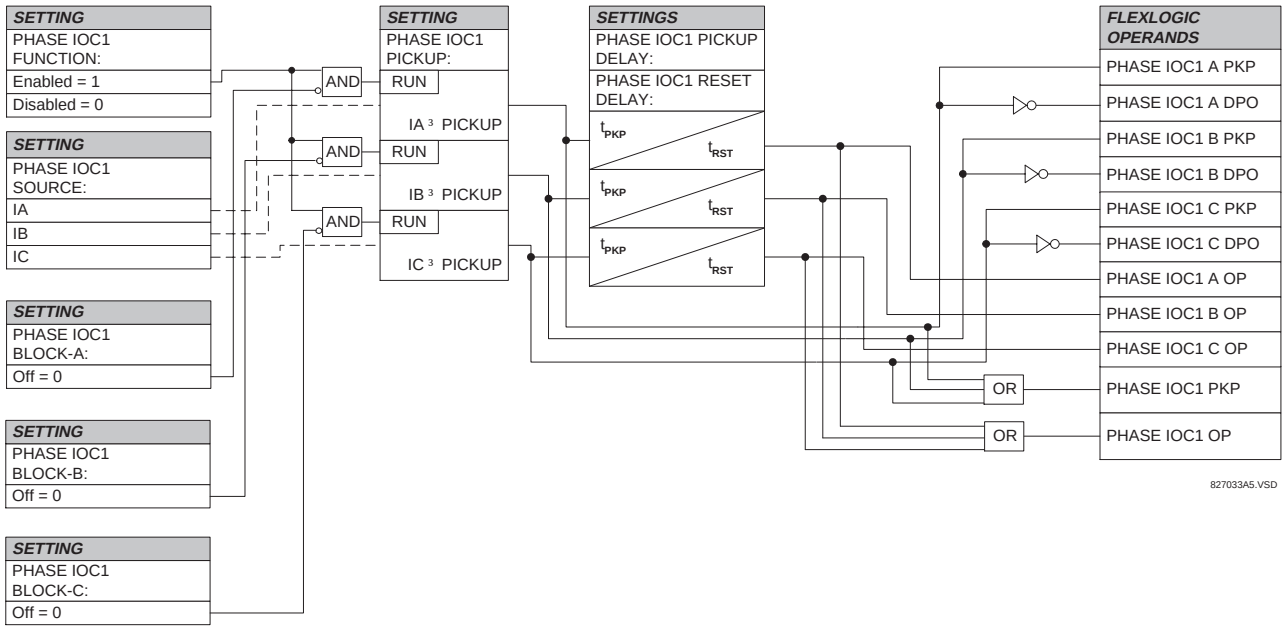

Figure 5–17: PHASE IOC1 SCHEME LOGIC

5.5.6 NEUTRAL CURRENT

a) NEUTRAL TOC1 through TOC6 (NEUTRAL TIME OVERCURRENT: ANSI 51N)

PATH: SETTINGS ⇨⇩ GROUPED ELEMENTS ⇨ SETTING GROUP 1(8) ⇨⇩ NEUTRAL CURRENT ⇨ NEUTRAL TOC1

■ NEUTRAL TOC1 ■	NEUTRAL TOC1 FUNCTION: Disabled	*Range: Disabled, Enabled*
MESSAGE	NEUTRAL TOC1 SIGNAL SOURCE: SRC 1	*Range: SRC 1, SRC 2,..., SRC 6*
MESSAGE	NEUTRAL TOC1 INPUT: Phasor	*Range: Phasor, RMS*
MESSAGE	NEUTRAL TOC1 PICKUP: 1.000 pu	*Range: 0.000 to 30.000 pu in steps of 0.001*
MESSAGE	NEUTRAL TOC1 CURVE: IEEE Mod Inv	*Range: See OVERCURRENT CURE TYPES table*
MESSAGE	NEUTRAL TOC1 TD MULTIPLIER: 1.00	*Range: 0.00 to 600.00 in steps of 0.01*
MESSAGE	NEUTRAL TOC1 RESET: Instantaneous	*Range: Instantaneous, Timed*
MESSAGE	NEUTRAL TOC1 BLOCK: Off	*Range: FlexLogic™ operand*
MESSAGE	NEUTRAL TOC1 TARGET: Self-reset	*Range: Self-reset, Latched, Disabled*
MESSAGE	NEUTRAL TOC1 EVENTS: Disabled	*Range: Disabled, Enabled*

The neutral time overcurrent element can provide a desired time-delay operating characteristic versus the applied current or be used as a simple Definite Time element. The neutral current input value is a quantity calculated as 3Io from the phase currents and may be programmed as fundamental phasor magnitude or total waveform RMS magnitude as required by the application.

Two methods of resetting operation are available: “Timed” and “Instantaneous” (refer to the INVERSE TOC CURVE CHARACTERISTICS section for details on curve setup, trip times and reset operation). When the element is blocked, the time accumulator will reset according to the reset characteristic. For example, if the element reset characteristic is set to "Instantaneous" and the element is blocked, the time accumulator will be cleared immediately.

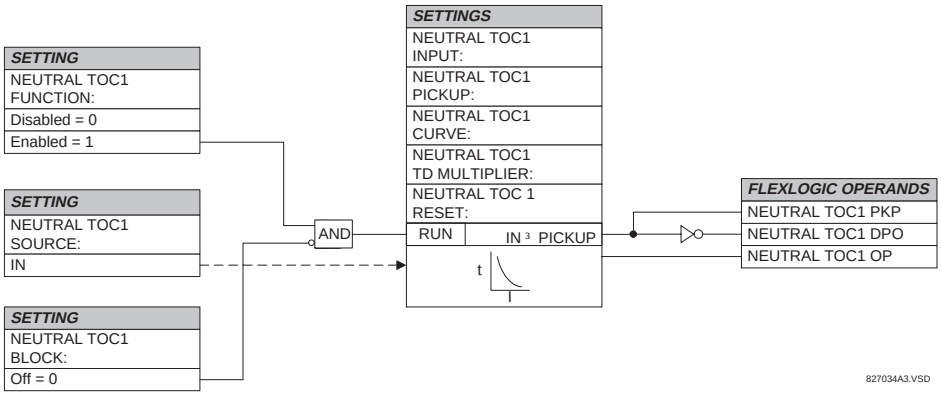

Figure 5–18: NEUTRAL TOC1 SCHEME LOGIC

NOTE

Once picked up, the NEUTRAL TOCx PKP output operand remains picked up until the thermal memory of the element resets completely. The PKP operand will not reset immediately after the operating current drops below the pickup threshold unless NEUTRL TOCx RESET is set to "Instantaneous".

b) NEUTRAL IOC1 through IOC12 (NEUTRAL INSTANTANEOUS OVERCURRENT: ANSI 50N)

PATH: SETTINGS ⇨⇩ GROUPED ELEMENTS ⇨ SETTING GROUP 1(8) ⇨⇩ NEUTRAL CURRENT ⇨⇩ NEUTRAL IOC1

■ NEUTRAL IOC1 ■	NEUTRAL IOC1 FUNCTION: Disabled	*Range: Disabled, Enabled*
MESSAGE	NEUTRAL IOC1 SIGNAL SOURCE: SRC 1	*Range: SRC 1, SRC 2,..., SRC 6*
MESSAGE	NEUTRAL IOC1 PICKUP: 1.000 pu	*Range: 0.000 to 30.000 pu in steps of 0.001*
MESSAGE	NEUTRAL IOC1 PICKUP DELAY: 0.00 s	*Range: 0.00 to 600.00 s in steps of 0.01*
MESSAGE	NEUTRAL IOC1 RESET DELAY: 0.00 s	*Range: 0.00 to 600.00 s in steps of 0.01*
MESSAGE	NEUTRAL IOC1 BLOCK: Off	*Range: FlexLogic™ operand*
MESSAGE	NEUTRAL IOC1 TARGET: Self-reset	*Range: Self-reset, Latched, Disabled*
MESSAGE	NEUTRAL IOC1 EVENTS: Disabled	*Range: Disabled, Enabled*

The Neutral Instantaneous Overcurrent element may be used as an instantaneous function with no intentional delay or as a Definite Time function. The element essentially responds to the magnitude of a neutral current fundamental frequency phasor calculated from the phase currents. A “positive-sequence restraint” is applied for better performance. A small portion (6.25%) of the positive-sequence current magnitude is subtracted from the zero-sequence current magnitude when forming the operating quantity of the element as follows:

$$I_{op} = 3 \times (|I\_0| - K \cdot |I\_1|) \quad , \text{ where } K = 1/16.$$

The positive-sequence restraint allows for more sensitive settings by counterbalancing spurious zero-sequence currents resulting from:

- system unbalances under heavy load conditions
- transformation errors of current transformers (CTs) during double-line and three-phase faults
- switch-off transients during double-line and three-phase faults

The positive-sequence restraint must be considered when testing for pickup accuracy and response time (multiple of pickup). The operating quantity depends on how test currents are injected into the relay (single-phase injection: $I_{op} = 0.9375 \cdot I_{injected}$; three-phase pure zero-sequence injection: $I_{op} = 3 \times I_{injected}$).

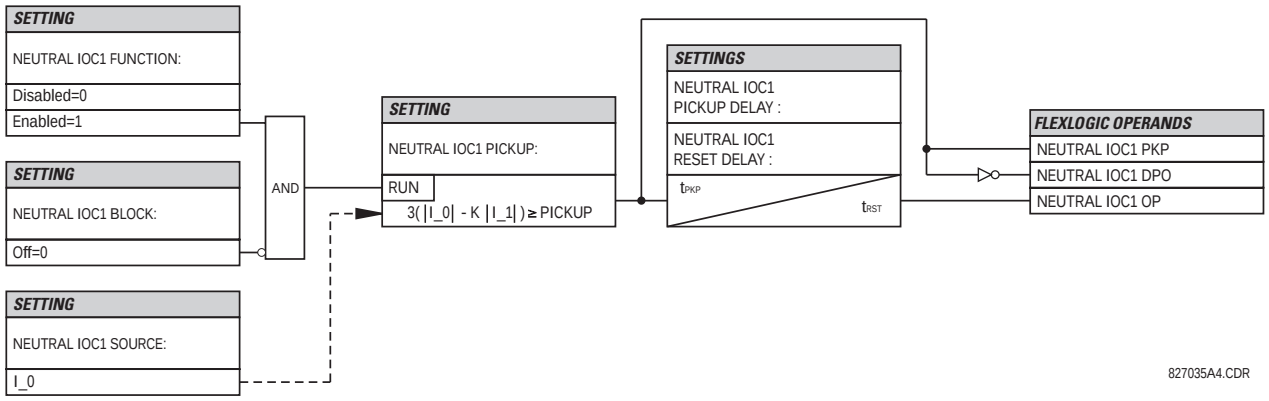

Figure 5–19: NEUTRAL IOC1 SCHEME LOGIC

5.5.7 GROUND CURRENT

a) GROUND TOC1 through TOC6 (GROUND TIME OVERCURRENT: ANSI 51G)

PATH: SETTINGS ⇨⇩ GROUPED ELEMENTS ⇨ SETTING GROUP 1(8) ⇨⇩ GROUND CURRENT ⇨ GROUND TOC1

```
■ GROUND TOC1
■
```

	GROUND TOC1 FUNCTION: Disabled	*Range: Disabled, Enabled*
MESSAGE	GROUND TOC1 SIGNAL SOURCE: SRC 1	*Range: SRC 1, SRC 2,..., SRC 6*
MESSAGE	GROUND TOC1 INPUT: Phasor	*Range: Phasor, RMS*
MESSAGE	GROUND TOC1 PICKUP: 1.000 pu	*Range: 0.000 to 30.000 pu in steps of 0.001*
MESSAGE	GROUND TOC1 CURVE: IEEE Mod Inv	*Range: see OVERCURRENT CURVE TYPES table*
MESSAGE	GROUND TOC1 TD MULTIPLIER: 1.00	*Range: 0.00 to 600.00 in steps of 0.01*
MESSAGE	GROUND TOC1 RESET: Instantaneous	*Range: Instantaneous, Timed*
MESSAGE	GROUND TOC1 BLOCK: Off	*Range: FlexLogic™ operand*
MESSAGE	GROUND TOC1 TARGET: Self-reset	*Range: Self-reset, Latched, Disabled*
MESSAGE	GROUND TOC1 EVENTS: Disabled	*Range: Disabled, Enabled*

This element can provide a desired time-delay operating characteristic versus the applied current or be used as a simple Definite Time element. The ground current input value is the quantity measured by the ground input CT and is the fundamental phasor or RMS magnitude. Two methods of resetting operation are available; “Timed” and “Instantaneous” (refer to the INVERSE TIME OVERCURRENT CURVE CHARACTERISTICS section for details). When the element is blocked, the time accumulator will reset according to the reset characteristic. For example, if the element reset characteristic is set to "Instantaneous" and the element is blocked, the time accumulator will be cleared immediately.

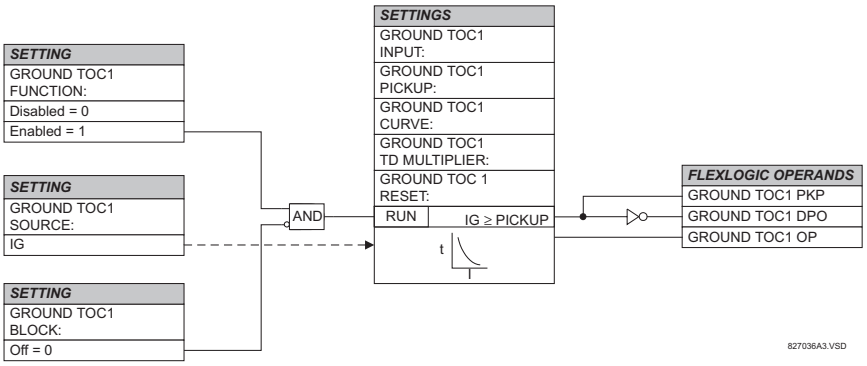

Figure 5–20: GROUND TOC1 SCHEME LOGIC

NOTE These elements measure the current that is connected to the ground channel of a CT/VT module. This channel may be equipped with a standard or sensitive input. The conversion range of a standard channel is from 0.02 to 46 times the CT rating. The conversion range of a sensitive channel is from 0.002 to 4.6 times the CT rating.

NOTE **Once picked up, the GROUND TOCx PKP output operand remains picked up until the thermal memory of the element resets completely. The PKP operand will not reset immediately after the operating current drops below the pickup threshold unless GROUND TOCx RESET is set to "Instantaneous".**

b) GROUND IOC1 through IOC12 (GROUND INSTANTANEOUS OVERCURRENT: ANSI 50G)

PATH: SETTINGS ⇨⇩ GROUPED ELEMENTS ⇨ SETTING GROUP 1(8) ⇨⇩ GROUND CURRENT ⇨⇩ GROUND IOC1

■ GROUND IOC1 ■	GROUND IOC1 FUNCTION: Disabled	*Range: Disabled, Enabled*
MESSAGE	GROUND IOC1 SIGNAL SOURCE: SRC 1	*Range: SRC 1, SRC 2,..., SRC 6*
MESSAGE	GROUND IOC1 PICKUP: 1.000 pu	*Range: 0.000 to 30.000 pu in steps of 0.001*
MESSAGE	GROUND IOC1 PICKUP DELAY: 0.00 s	*Range: 0.00 to 600.00 s in steps of 0.01*
MESSAGE	GROUND IOC1 RESET DELAY: 0.00 s	*Range: 0.00 to 600.00 s in steps of 0.01*
MESSAGE	GROUND IOC1 BLOCK: Off	*Range: FlexLogic™ operand*
MESSAGE	GROUND IOC1 TARGET: Self-reset	*Range: Self-reset, Latched, Disabled*
MESSAGE	GROUND IOC1 EVENTS: Disabled	*Range: Disabled, Enabled*

The ground instantaneous overcurrent element may be used as an instantaneous element with no intentional delay or as a Definite Time element. The ground current input value is the quantity measured by the ground input CT and is the fundamental phasor magnitude.

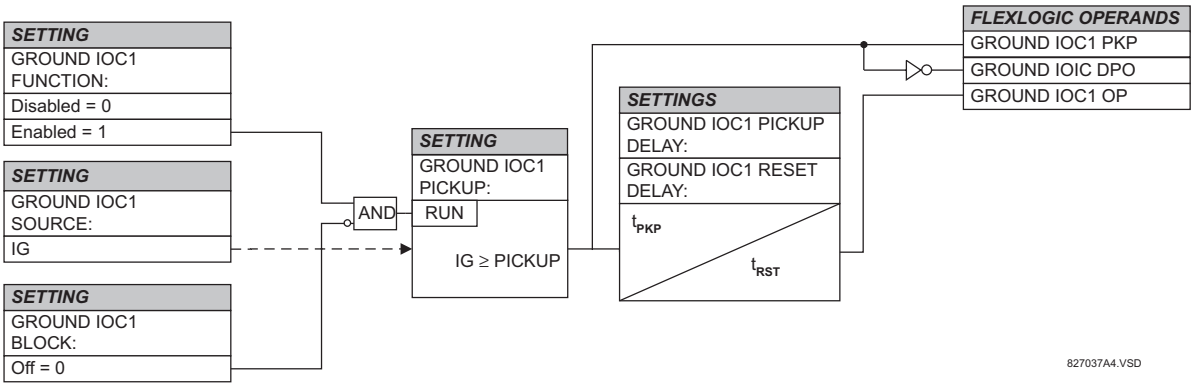

Figure 5–21: GROUND IOC1 SCHEME LOGIC

NOTE These elements measure the current that is connected to the ground channel of a CT/VT module. This channel may be equipped with a standard or sensitive input. The conversion range of a standard channel is from 0.02 to 46 times the CT rating. The conversion range of a sensitive channel is from 0.002 to 4.6 times the CT rating.

5.5.8 VOLTAGE ELEMENTS

PATH: SETTINGS ⇨⇩ GROUPED ELEMENTS ⇨ SETTING GROUP 1(8) ⇨⇩ VOLTAGE ELEMENTS

```
■ VOLTAGE ELEMENTS
■
```

```
■ PHASE
■ UNDERVOLTAGE1
```

MESSAGE

```
■ PHASE
■ UNDERVOLTAGE2
```

MESSAGE

```
■ NEUTRAL OV1
■
```

MESSAGE

```
■ AUXILIARY UV1
■
```

MESSAGE

```
■ AUXILIARY OV1
■
```

These protection elements can be used for a variety of applications such as:

Undervoltage Protection: For voltage sensitive loads, such as induction motors, a drop in voltage increases the drawn current which may cause dangerous overheating in the motor. The undervoltage protection feature can be used to either cause a trip or generate an alarm when the voltage drops below a specified voltage setting for a specified time delay.

Permissive Functions: The undervoltage feature may be used to block the functioning of external devices by operating an output relay when the voltage falls below the specified voltage setting. The undervoltage feature may also be used to block the functioning of other elements through the block feature of those elements.

5

Source Transfer Schemes: In the event of an undervoltage, a transfer signal may be generated to transfer a load from its normal source to a standby or emergency power source.

The undervoltage elements can be programmed to have a Definite Time delay characteristic. The Definite Time curve operates when the voltage drops below the pickup level for a specified period of time. The time delay is adjustable from 0 to 600.00 seconds in steps of 10 ms. The undervoltage elements can also be programmed to have an inverse time delay characteristic. The undervoltage delay setting defines the family of curves shown below.

$$T = \frac{D}{\left(1 - \frac{V}{V_{pickup}}\right)}$$

where: T = Operating Time
D = Undervoltage Delay Setting
(D = 0.00 operates instantaneously)
V = Secondary Voltage applied to the relay
V_{pickup} = Pickup Level

NOTE

At 0% of pickup, the operating time equals the UNDERVOLTAGE DELAY setting.

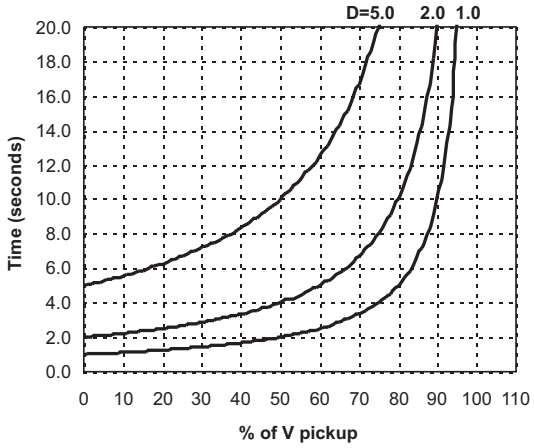

Figure 5–22: INVERSE TIME UNDERVOLTAGE CURVES

a) PHASE UV1 / UV2 (PHASE UNDERVOLTAGE: ANSI 27P)

PATH: SETTINGS ⇨⇩ GROUPED ELEMENTS ⇨ SETTING GROUP 1(8) ⇨⇩ VOLTAGE ELEMENTS ⇨ PHASE UNDERVOLTAGE1

■ PHASE ■ UNDERVOLTAGE1	PHASE UV1 FUNCTION: Disabled	*Range: Disabled, Enabled*
MESSAGE	PHASE UV1 SIGNAL SOURCE: SRC 1	*Range: SRC 1, SRC 2,..., SRC 6*
MESSAGE	PHASE UV1 MODE: Phase to Ground	*Range: Phase to Ground, Phase to Phase*
MESSAGE	PHASE UV1 PICKUP: 1.000 pu	*Range: 0.000 to 3.000 pu in steps of 0.001*
MESSAGE	PHASE UV1 CURVE: Definite Time	*Range: Definite Time, Inverse Time*
MESSAGE	PHASE UV1 DELAY: 1.00 s	*Range: 0.00 to 600.00 s in steps of 0.01*
MESSAGE	PHASE UV1 MINIMUM VOLTAGE: 0.100 pu	*Range: 0.000 to 3.000 pu in steps of 0.001*
MESSAGE	PHASE UV1 BLOCK: Off	*Range: FlexLogic™ operand*
MESSAGE	PHASE UV1 TARGET: Self-reset	*Range: Self-reset, Latched, Disabled*
MESSAGE	PHASE UV1 EVENTS: Disabled	*Range: Disabled, Enabled*

The phase undervoltage element may be used to give a desired time-delay operating characteristic versus the applied fundamental voltage (phase to ground or phase to phase for Wye VT connection, or phase to phase only for Delta VT connection) or as a simple Definite Time element. The element resets instantaneously if the applied voltage exceeds the dropout voltage. The delay setting selects the minimum operating time of the phase undervoltage element. The minimum voltage setting selects the operating voltage below which the element is blocked (a setting of '0' will allow a dead source to be considered a fault condition).

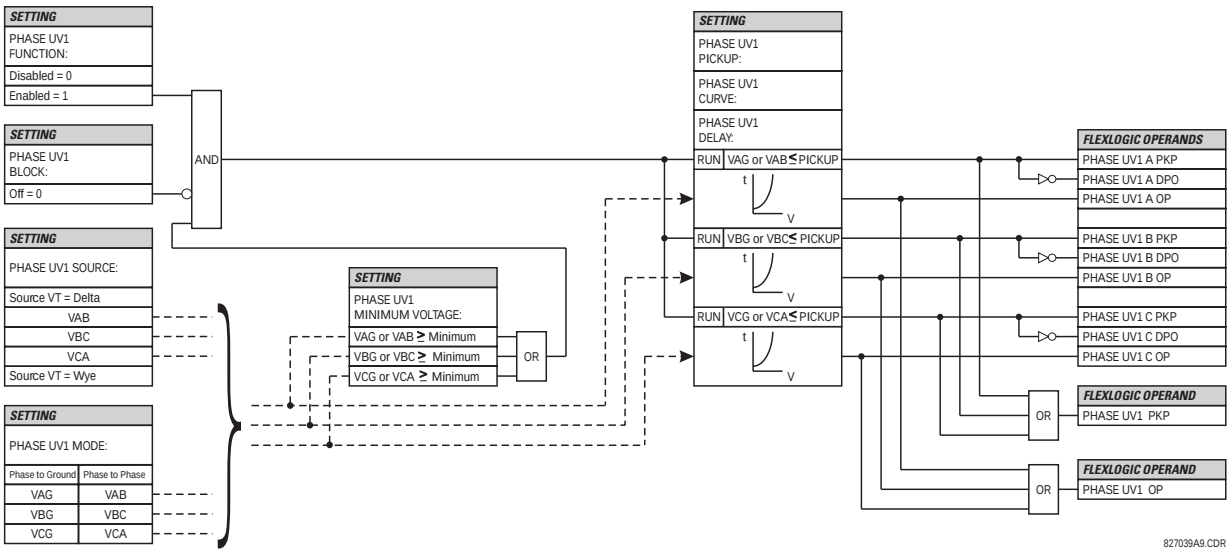

Figure 5–23: PHASE UV1 SCHEME LOGIC

5.5.10 NEUTRAL VOLTAGE

a) NEUTRAL OV1 (NEUTRAL OVERVOLTAGE: ANSI 59N)

PATH: SETTINGS ⇨⇩ GROUPED ELEMENTS ⇨ SETTING GROUP 1(8) ⇨⇩ VOLTAGE ELEMENTS ⇨⇩ NEUTRAL OV1

■ NEUTRAL OV1 ■	NEUTRAL OV1 FUNCTION: Disabled	*Range: Disabled, Enabled*
MESSAGE	NEUTRAL OV1 SIGNAL SOURCE: SRC 1	*Range: SRC 1, SRC 2,..., SRC 6*
MESSAGE	NEUTRAL OV1 PICKUP: 0.300 pu	*Range: 0.000 to 1.250 pu in steps of 0.001*
MESSAGE	NEUTRAL OV1 PICKUP: DELAY: 1.00 s	*Range: 0.00 to 600.00 s in steps of 0.01*
MESSAGE	NEUTRAL OV1 RESET: DELAY: 1.00 s	*Range: 0.00 to 600.00 s in steps of 0.01*
MESSAGE	NEUTRAL OV1 BLOCK: Off	*Range: FlexLogic™ operand*
MESSAGE	NEUTRAL OV1 TARGET: Self-reset	*Range: Self-reset, Latched, Disabled*
MESSAGE	NEUTRAL OV1 EVENTS: Disabled	*Range: Disabled, Enabled*

5

The Neutral Overvoltage element can be used to detect asymmetrical system voltage condition due to a ground fault or to the loss of one or two phases of the source.

The element responds to the system neutral voltage (3V_0), calculated from the phase voltages. The nominal secondary voltage of the phase voltage channels entered under **SETTINGS ⇨⇩ SYSTEM SETUP ⇨ AC INPUTS ⇨⇩ VOLTAGE BANK ⇨ PHASE VT SECONDARY** is the p.u. base used when setting the pickup level.

VT errors and normal voltage unbalance must be considered when setting this element. This function requires the VTs to be Wye connected.

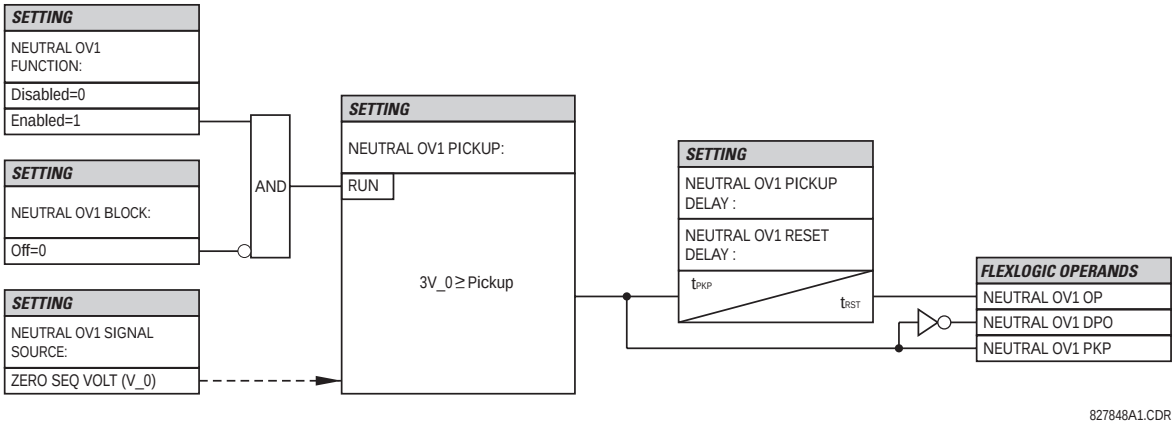

Figure 5–24: NEUTRAL OVERVOLTAGE SCHEME LOGIC

a) AUXILIARY UV1 (AUXILIARY UNDERVOLTAGE: ANSI 27X)

PATH: SETTINGS ⇨⇩ GROUPED ELEMENTS ⇨ SETTING GROUP 1(8) ⇨⇩ VOLTAGE ELEMENTS ⇨⇩ AUXILIARY UV1

■ AUXILIARY UV1 ■	AUX UV1 FUNCTION: Disabled	*Range: Disabled, Enabled*
MESSAGE	AUX UV1 SIGNAL SOURCE: SRC 1	*Range: SRC 1, SRC 2,..., SRC 6*
MESSAGE	AUX UV1 PICKUP: 0.700 pu	*Range: 0.000 to 3.000 pu in steps of 0.001*
MESSAGE	AUX UV1 CURVE: Definite Time	*Range: Definite Time, Inverse Time*
MESSAGE	AUX UV1 DELAY: 1.00 s	*Range: 0.00 to 600.00 s in steps of 0.01*
MESSAGE	AUX UV1 MINIMUM: VOLTAGE: 0.100 pu	*Range: 0.000 to 3.000 pu in steps of 0.001*
MESSAGE	AUX UV1 BLOCK: Off	*Range: FlexLogic™ operand*
MESSAGE	AUX UV1 TARGET: Self-reset	*Range: Self-reset, Latched, Disabled*
MESSAGE	AUX UV1 EVENTS: Disabled	*Range: Disabled, Enabled*

This element is intended for monitoring undervoltage conditions of the auxiliary voltage. The **PICKUP** selects the voltage level at which the time undervoltage element starts timing. The nominal secondary voltage of the auxiliary voltage channel entered under **SETTINGS ⇩ SYSTEM SETUP ⇨ AC INPUTS ⇩⇨ VOLTAGE BANK X5 / AUXILIARY VT X5 SECONDARY** is the p.u. base used when setting the pickup level.

The **DELAY** setting selects the minimum operating time of the phase undervoltage element. Both **PICKUP** and **DELAY** settings establish the operating curve of the undervoltage element. The auxiliary undervoltage element can be programmed to use either Definite Time Delay or Inverse Time Delay characteristics. The operating characteristics and equations for both Definite and Inverse Time Delay are as for the Phase Undervoltage Element.

The element resets instantaneously. The minimum voltage setting selects the operating voltage below which the element is blocked.

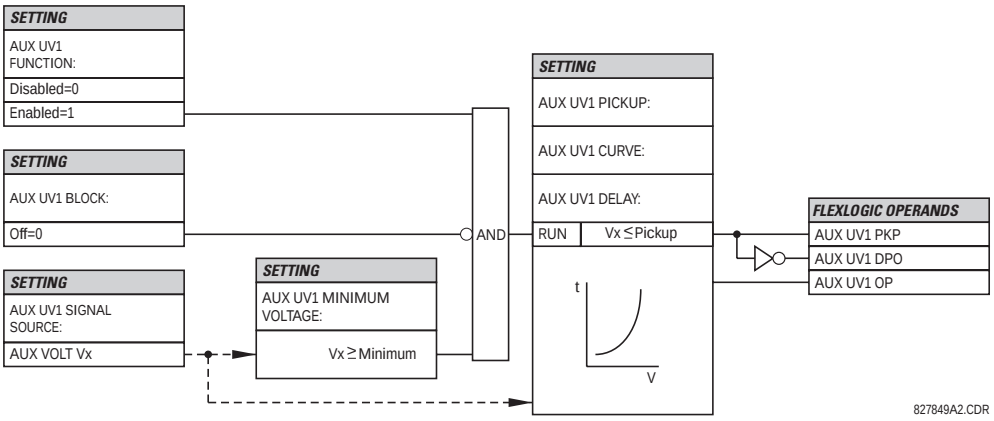

Figure 5–25: AUXILIARY UNDERVOLTAGE SCHEME LOGIC

b) AUXILIARY OV1 (AUXILIARY OVERVOLTAGE: ANSI 59X)

PATH: SETTINGS ⇨⇩ GROUPED ELEMENTS ⇨ SETTING GROUP 1(8) ⇨⇩ VOLTAGE ELEMENTS ⇨⇩ AUXILIARY OV1

■ AUXILIARY OV1 ■	AUX OV1 FUNCTION: Disabled	*Range: Disabled, Enabled*
MESSAGE	AUX OV1 SIGNAL SOURCE: SRC 1	*Range: SRC 1, SRC 2,..., SRC 6*
MESSAGE	AUX OV1 PICKUP: 0.300 pu	*Range: 0.000 to 3.000 pu in steps of 0.001*
MESSAGE	AUX OV1 PICKUP DELAY: 1.00 s	*Range: 0.00 to 600.00 s in steps of 0.01*
MESSAGE	AUX OV1 RESET DELAY: 1.00 s	*Range: 0.00 to 600.00 s in steps of 0.01*
MESSAGE	AUX OV1 BLOCK: Off	*Range: FlexLogic™ operand*
MESSAGE	AUX OV1 TARGET: Self-reset	*Range: Self-reset, Latched, Disabled*
MESSAGE	AUX OV1 EVENTS: Disabled	*Range: Disabled, Enabled*

5

This element is intended for monitoring overvoltage conditions of the auxiliary voltage. The nominal secondary voltage of the auxiliary voltage channel entered under **SETTINGS ⇨⇩ SYSTEM SETUP ⇨ AC INPUTS ⇩⇨ VOLTAGE BANK X5 ⇩⇨ AUXILIARY VT X5 SECONDARY** is the p.u. base used when setting the pickup level.

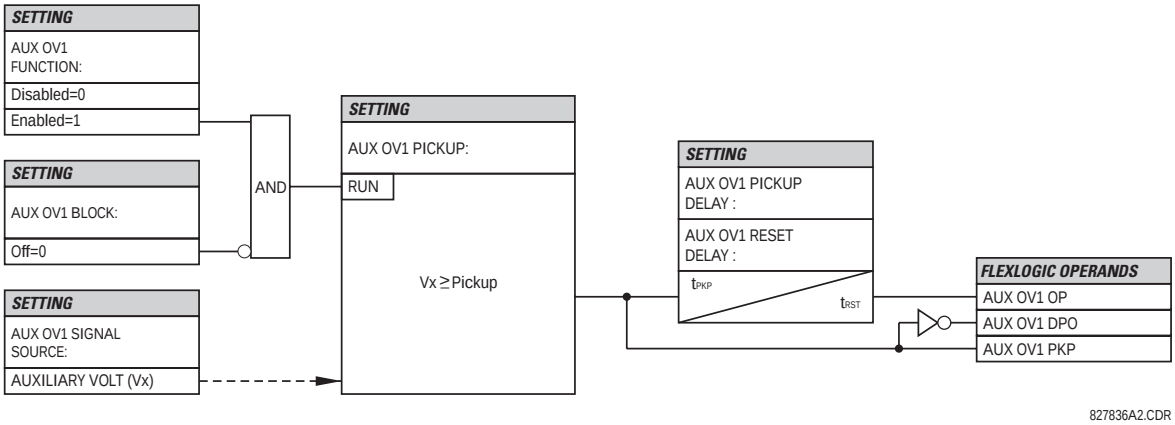

Figure 5–26: AUXILIARY OVERVOLTAGE SCHEME LOGIC

5.6.1 OVERVIEW

CONTROL elements are generally used for control rather than protection. See the INTRODUCTION TO ELEMENTS section at the front of this chapter for further information.

5.6.2 SETTING GROUPS

PATH: SETTINGS ⇨⇩ CONTROL ELEMENTS ⇨ SETTINGS GROUPS

```
■ SETTING GROUPS
■
```

	SETTING GROUPS FUNCTION: Disabled	*Range: Disabled, Enabled*
MESSAGE	SETTING GROUPS BLK: Off	*Range: FlexLogic™ operand*
MESSAGE	GROUP 2 ACTIVATE ON: Off	*Range: FlexLogic™ operand*
	↓	
MESSAGE	GROUP 8 ACTIVATE ON: Off	*Range: FlexLogic™ operand*
MESSAGE	SETTING GROUP EVENTS: Disabled	*Range: Disabled, Enabled*

The Setting Groups menu controls the activation/deactivation of up to eight possible groups of settings in the **GROUPED ELEMENTS** settings menu. The faceplate 'SETTINGS IN USE' LEDs indicate which active group (with a non-flashing energized LED) is in service.

The **SETTING GROUPS BLK** setting prevents the active setting group from changing when the FlexLogic™ parameter is set to "On". This can be useful in applications where it is undesirable to change the settings under certain conditions, such as the breaker being open.

Each **GROUP ~ ACTIVATE ON** setting selects a FlexLogic™ operand which, when set, will make the particular setting group active for use by any grouped element. A priority scheme ensures that only one group is active at a given time – the highest-numbered group which is activated by its ACTIVATE ON parameter takes priority over the lower-numbered groups. There is no "activate on" setting for group 1 (the default active group), because group 1 automatically becomes active if no other group is active.

The relay can be set up via a FlexLogic™ equation to receive requests to activate or de-activate a particular non-default settings group. The following FlexLogic™ equation (see the figure below) illustrates requests via remote communications (e.g. VIRTUAL INPUT 1) or from a local contact input (e.g. H7a) to initiate the use of a particular settings group, and requests from several overcurrent pickup measuring elements to inhibit the use of the particular settings group. The assigned VIRTUAL OUTPUT 1 operand is used to control the ON state of a particular settings group.

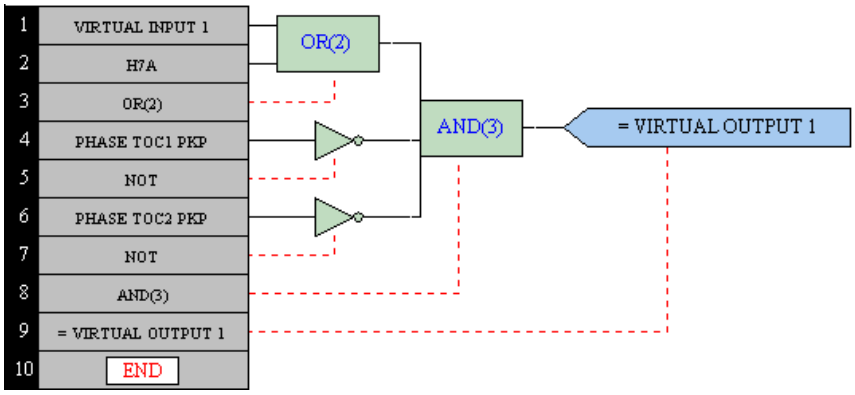

Figure 5–27: EXAMPLE FLEXLOGIC™ CONTROL OF A SETTINGS GROUP

5.6.3 UNDERFREQUENCY

PATH: SETTINGS ⇨⇩ CONTROL ELEMENTS ⇨⇩ UNDERFREQUENCY ⇨ UNDERFREQUENCY 1(6)

■ UNDERFREQUENCY 1 ■	UNDFREQ 1 FUNCTION: Disabled	*Range: Disabled, Enabled*
MESSAGE	UNDERFREQ 1 BLOCK: Off	*Range: FlexLogic™ operand*
MESSAGE	UNDERFREQ 1 SOURCE: SRC 1	*Range: SRC 1, SRC 2,..., SRC 6*
MESSAGE	UNDERFREQ 1 MIN VOLT/AMP: 0.10 pu	*Range: 0.10 to 1.25 pu in steps of 0.01*
MESSAGE	UNDERFREQ 1 PICKUP: 59.50 Hz	*Range: 20.00 to 65.00 Hz in steps of 0.01*
MESSAGE	UNDERFREQ 1 PICKUP DELAY: 2.000 s	*Range: 0.000 to 65.535 s in steps of 0.001*
MESSAGE	UNDERFREQ 1 RESET DELAY : 2.000 s	*Range: 0.000 to 65.535 s in steps of 0.001*
MESSAGE	UNDERFREQ 1 TARGET: Self-reset	*Range: Self-reset, Latched, Disabled*
MESSAGE	UNDERFREQ 1 EVENTS: Disabled	*Range: Disabled, Enabled*

5

There are six identical underfrequency elements, numbered from 1 through 6 inclusive.

The steady-state frequency of a power system is a certain indicator of the existing balance between the generated power and the load. Whenever this balance is disrupted through the loss of an important generating unit or the isolation of part of the system from the rest of the system, the effect will be a reduction in frequency. If the control systems of the system generators do not respond fast enough, the system may collapse. A reliable method to quickly restore the balance between load and generation is to automatically disconnect selected loads, based on the actual system frequency. This technique, called "load-shedding", maintains system integrity and minimize widespread outages. After the frequency returns to normal, the load may be automatically or manually restored.

The **UNDERFREQ 1 SOURCE** setting is used to select the source for the signal to be measured. The element first checks for a live phase voltage available from the selected Source. If voltage is not available, the element attempts to use a phase current. If neither voltage nor current is available, the element will not operate, as it will not measure a parameter above the minimum voltage/current setting.

The **UNDERFREQ 1 MIN VOLT/AMP** setting selects the minimum per unit voltage or current level required to allow the underfrequency element to operate. This threshold is used to prevent an incorrect operation because there is no signal to measure.

This **UNDERFREQ 1 PICKUP** setting is used to select the level at which the underfrequency element is to pickup. For example, if the system frequency is 60 Hz and the load shedding is required at 59.5 Hz, the setting will be 59.50 Hz.

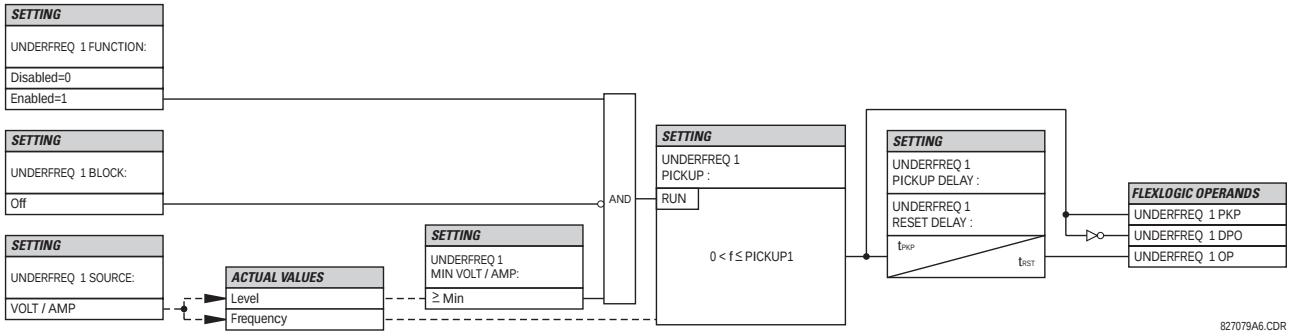

Figure 5–28: UNDERFREQUENCY SCHEME LOGIC

5.6.4 AUTORECLOSE

PATH: SETTINGS ⇨⇩ CONTROL ELEMENTS ⇨⇩ AUTORECLOSE ⇨ AUTORECLOSE 1

■ AUTORECLOSE 1 ■	AR1 FUNCTION: Disabled	Range: Disabled, Enabled
MESSAGE	AR1 INITIATE: Off	Range: FlexLogic™ operand
MESSAGE	AR1 BLOCK: Off	Range: FlexLogic™ operand
MESSAGE	AR1 MAX NUMBER OF SHOTS: 1	Range: 1, 2, 3, 4
MESSAGE	AR1 REDUCE MAX TO 1: Off	Range: FlexLogic™ operand
MESSAGE	AR1 REDUCE MAX TO 2: Off	Range: FlexLogic™ operand
MESSAGE	AR1 REDUCE MAX TO 3: Off	Range: FlexLogic™ operand
MESSAGE	AR1 MANUAL CLOSE: Off	Range: FlexLogic™ operand
MESSAGE	AR1 MNL RST FRM LO: Off	Range: FlexLogic™ operand
MESSAGE	AR1 RESET LOCKOUT IF BREAKER CLOSED: Off	Range: Off, On
MESSAGE	AR1 RESET LOCKOUT ON MANUAL CLOSE: Off	Range: Off, On
MESSAGE	AR1 BKR CLOSED: Off	Range: FlexLogic™ operand
MESSAGE	AR1 BKR OPEN: Off	Range: FlexLogic™ operand
MESSAGE	AR1 BLK TIME UPON MNL CLS: 10.000 s	Range: 0.00 to 655.35 s in steps of 0.01
MESSAGE	AR1 DEAD TIME 1: 1.000 s	Range: 0.00 to 655.35 s in steps of 0.01
MESSAGE	AR1 DEAD TIME 2: 2.000 s	Range: 0.00 to 655.35 s in steps of 0.01
MESSAGE	AR1 DEAD TIME 3: 3.000 s	Range: 0.00 to 655.35 s in steps of 0.01
MESSAGE	AR1 DEAD TIME 4: 4.000 s	Range: 0.00 to 655.35 s in steps of 0.01
MESSAGE	AR1 ADD DELAY 1: Off	Range: FlexLogic™ operand
MESSAGE	AR1 DELAY 1: 0.000 s	Range: 0.00 to 655.35 s in steps of 0.01
MESSAGE	AR1 ADD DELAY 2: Off	Range: FlexLogic™ operand

MESSAGE	AR1 DELAY 2: 0.000 s	Range: 0.00 to 655.35 s in steps of 0.01
MESSAGE	AR1 RESET LOCKOUT DELAY: 60.000	Range: 0.00 to 655.35 s in steps of 0.01
MESSAGE	AR1 RESET TIME: 60.000 s	Range: 0.00 to 655.35 s in steps of 0.01
MESSAGE	AR1 INCOMPLETE SEQ TIME: 5.000 s	Range: 0.00 to 655.35 s in steps of 0.01
MESSAGE	AR1 EVENTS: Disabled	Range: Disabled, Enabled

a) FUNCTION

The autoreclosure feature is intended for use with transmission and distribution lines, in three-pole tripping schemes for single breaker applications. Up to four selectable reclosures "shots" are possible prior to locking out. Each shot has an independently settable dead time. The protection settings can be changed between shots if so desired, using FlexLogic™. Logic inputs are available for disabling or blocking the scheme.

Faceplate panel LEDs indicate the state of the autoreclose scheme as follows:

- RECLOSE ENABLED: The scheme is enabled and may reclose if initiated.
- RECLOSE DISABLED: The scheme is disabled.
- RECLOSE IN PROGRESS: An autoreclosure has been initiated but the breaker has not yet been signaled to close.
- RECLOSE LOCKED OUT: The scheme has generated the maximum number of breaker closures allowed and, as the fault persists, will not close the breaker again; known as "Lockout". The scheme may also be sent in "Lockout" when the incomplete sequence timer times out or when a block signal occurs while in "Reclose in Progress". The scheme must be reset from Lockout in order to perform reclose for further faults.

RECLOSE ENABLED:

The reclosure scheme is considered enabled when all of the following conditions are true:

- The "AR Function" is set to Enabled.
- The scheme is not in the "Lockout" state.
- The "Block" input is not asserted.
- The "AR Block Time Upon Manual Close" timer is not active.

RECLOSE INITIATION:

The autoreclose scheme is initiated by a trip signal from any selected protection feature operand. The scheme is initiated provided the circuit breaker is in the closed state before protection operation.

RECLOSE IN PROGRESS (RIP):

RIP is set when a reclosing cycle begins following a reclose initiate signal. Once the cycle is successfully initiated, the RIP signal will seal-in and the scheme will continue through its sequence until one of the following conditions is satisfied:

- The close signal is issued when the dead timer times out.
- The scheme goes to lockout.

While RIP is active, the scheme checks that the breaker is open and the shot number is below the limit, and then begins measuring the dead time.

DEAD TIME:

Each of the four possible shots has an independently settable dead time. Two additional timers can be used to increase the initial set dead times 1 to 4 by a delay equal to **AR1 DELAY 1** or **AR1 DELAY 2** or the sum of these two delays depending on the selected settings. This offers enhanced setting flexibility using FlexLogic™ operands to turn the two additional timers "on" and "off". These operands may possibly include "AR x SHOT CNT =n", "SETTING GROUP ACT x", etc.

The autoreclose provides up to maximum 4 selectable shots. Maximum number of shots can be dynamically modified through the settings **AR1 REDUCE MAX TO 1 (2, 3)**, using the appropriate FlexLogic™ operand.

LOCKOUT:

Scheme lockout will block all phases of the reclosing cycle, preventing automatic reclosure, if any of the following conditions occurs:

- The maximum shot number was reached.
- A "Block" input is in effect (for instance; Breaker Failure, bus differential protection operated, etc.).
- The "Incomplete Sequence" timer times out.

The recloser will be latched in the Lockout state until a "Reset from lockout" signal is asserted, either from a manual close of the breaker or from a manual reset command (local or remote). The reset from lockout can be accomplished:

- by operator command
- by manually closing the breaker
- whenever the breaker has been closed and stays closed for a preset time.

CLOSE:

After the dead time elapses, the scheme issues the close signal. The close signal is latched until the breaker closes or the scheme goes to Lockout.

RESET TIME:

A reset timer output resets the recloser following a successful reclosure sequence. The reset time is based on the breaker "reclaim time" which is the minimum time required between successive reclose sequences.

b) SETTINGS

AR1 INITIATE:

Selects the FlexLogic™ Operand that initiates the scheme, typically the trip signal from protection.

AR1 BLOCK:

Selects the FlexLogic™ Operand that blocks the Autoreclosure initiate (it could be from the Breaker Failure, Bus differential protection, etc.).

AR1 MAX NUMBER OF SHOTS:

Specifies the number of reclosures that can be attempted before reclosure goes to "Lockout" because the fault is permanent.

AR1 REDUCE MAX TO 1:

Selects the FlexLogic™ operand that changes the maximum number of shots from the initial setting to 1.

AR1 REDUCE MAX TO 2:

Selects the FlexLogic™ operand that changes the maximum number of shots from the initial setting to 2.

AR1 REDUCE MAX TO 3:

Selects the FlexLogic™ operand that changes the maximum number of shots from the initial setting to 3.

AR1 MANUAL CLOSE:

Selects the logic input set when the breaker is manually closed.

AR1 MNL RST FRM LO:

Selects the FlexLogic™ Operand that resets the autoreclosure from Lockout condition. Typically this is a manual reset from lockout, local or remote.

AR1 RESET LOCKOUT IF BREAKER CLOSED:

This setting allows the autoreclose scheme to reset from Lockout if the breaker has been manually closed and stays closed for a preset time. In order for this setting to be effective, the next setting (**AR1 RESET LOCKOUT ON MANUAL CLOSE**) should be disabled.

AR 1 RESET LOCKOUT ON MANUAL CLOSE:

This setting allows the autoreclose scheme to reset from Lockout when the breaker is manually closed regardless if the breaker remains closed or not. This setting overrides the previous setting (**AR1 RESET LOCKOUT IF BREAKER CLOSED**).

AR1 BLK TIME UPON MNL CLS:

The autoreclose scheme can be disabled for a programmable time delay after the associated circuit breaker is manually closed. This prevents reclosing onto a fault after a manual close. This delay must be longer than the slowest expected trip from any protection not blocked after manual closing. If no overcurrent trips occur after a manual close and this time expires, the autoreclose scheme is enabled.

AR1 DEAD TIME 1:

This is the intentional delay before first breaker automatic reclosure (1st shot) and should be set longer than the estimated deionizing time following a three pole trip.

AR1 DEAD TIME 2:

This is the intentional delay before second breaker automatic reclosure (2nd shot) and should be set longer than the estimated deionizing time following a three pole trip.

AR1 DEAD TIME 3:

This is the intentional delay before third breaker automatic reclosure (3rd shot) and should be set longer than the estimated deionizing time following a three pole trip.

AR1 DEAD TIME 4:

This is the intentional delay before fourth breaker automatic reclosure (4th shot) and should be set longer than the estimated deionizing time following a three pole trip.

AR1 ADD DELAY 1:

This setting selects the FlexLogic™ operand that introduces an additional delay (DELAY 1) to the initial set Dead Time (1 to 4). When this setting is "Off", DELAY 1 is by-passed.

AR1 DELAY 1:

This setting establishes the extent of the additional dead time DELAY 1.

AR1 ADD DELAY 2:

This setting selects the FlexLogic™ operand that introduces an additional delay (DELAY 2) to the initial set Dead Time (1 to 4). When this setting is "Off", DELAY 2 is by-passed.

AR1 DELAY 2:

This setting establishes the extent of the additional dead time DELAY 2.

AR1 RESET LOCKOUT DELAY:

This setting establishes how long the breaker should stay closed after a manual close command, in order for the autorecloser to reset from Lockout.

AR1 RESET TIME:

A reset timer output resets the recloser following a successful reclosure sequence. The setting is based on the breaker "reclaim time" which is the minimum time required between successive reclose sequences.

AR1 INCOMPLETE SEQ TIME:

This timer is used to set the maximum time interval allowed for a single reclose shot. It is started whenever a reclosure is initiated and is active when the scheme is in the "RECLOSE IN PROGRESS" state. If all conditions allowing a breaker closure are not satisfied when this time expires, the scheme goes to "Lockout".

NOTE

This timer must be set to a delay less than the reset timer.

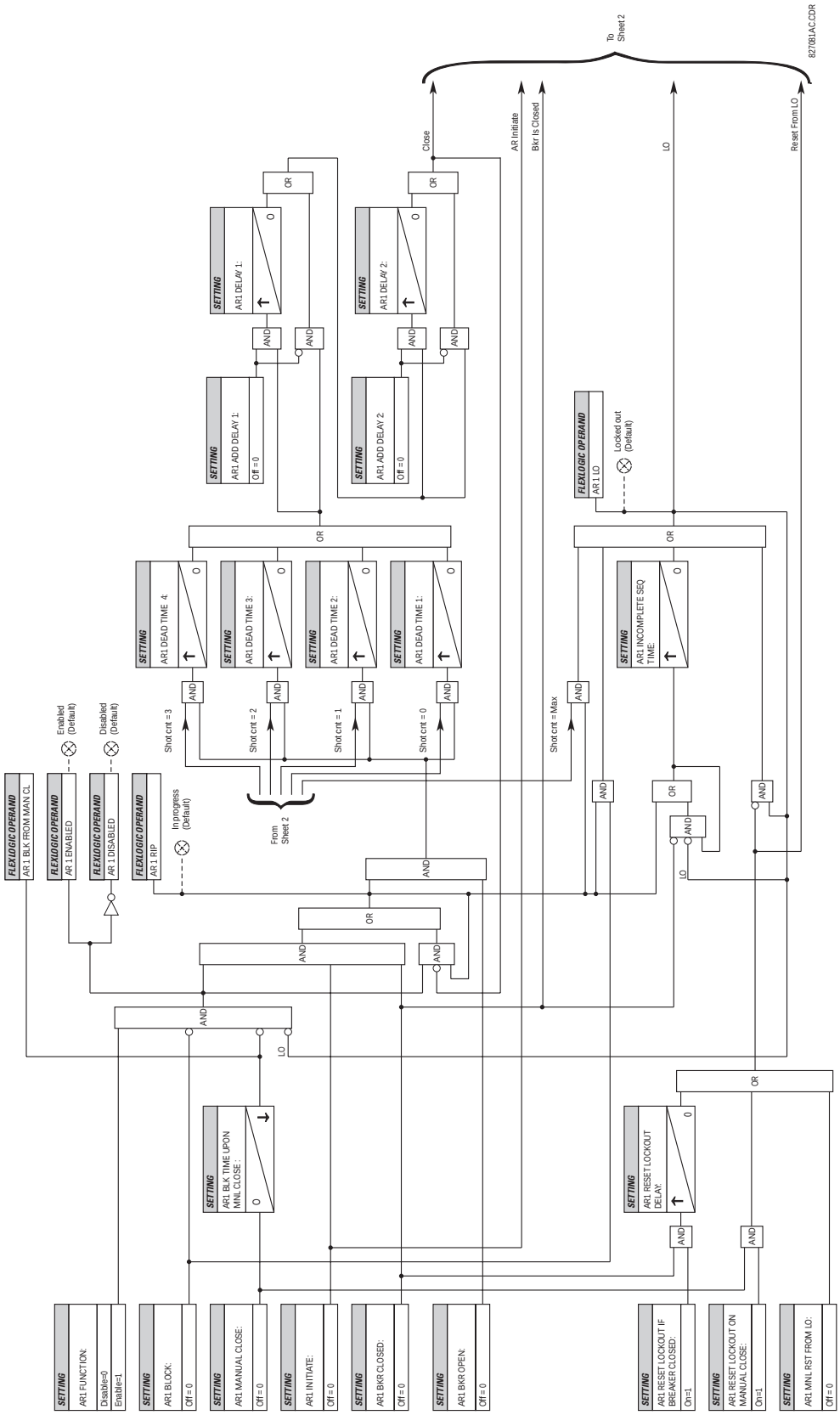

Figure 5–29: AUTORECLOSURE SCHEME LOGIC (Sheet 1 of 2)

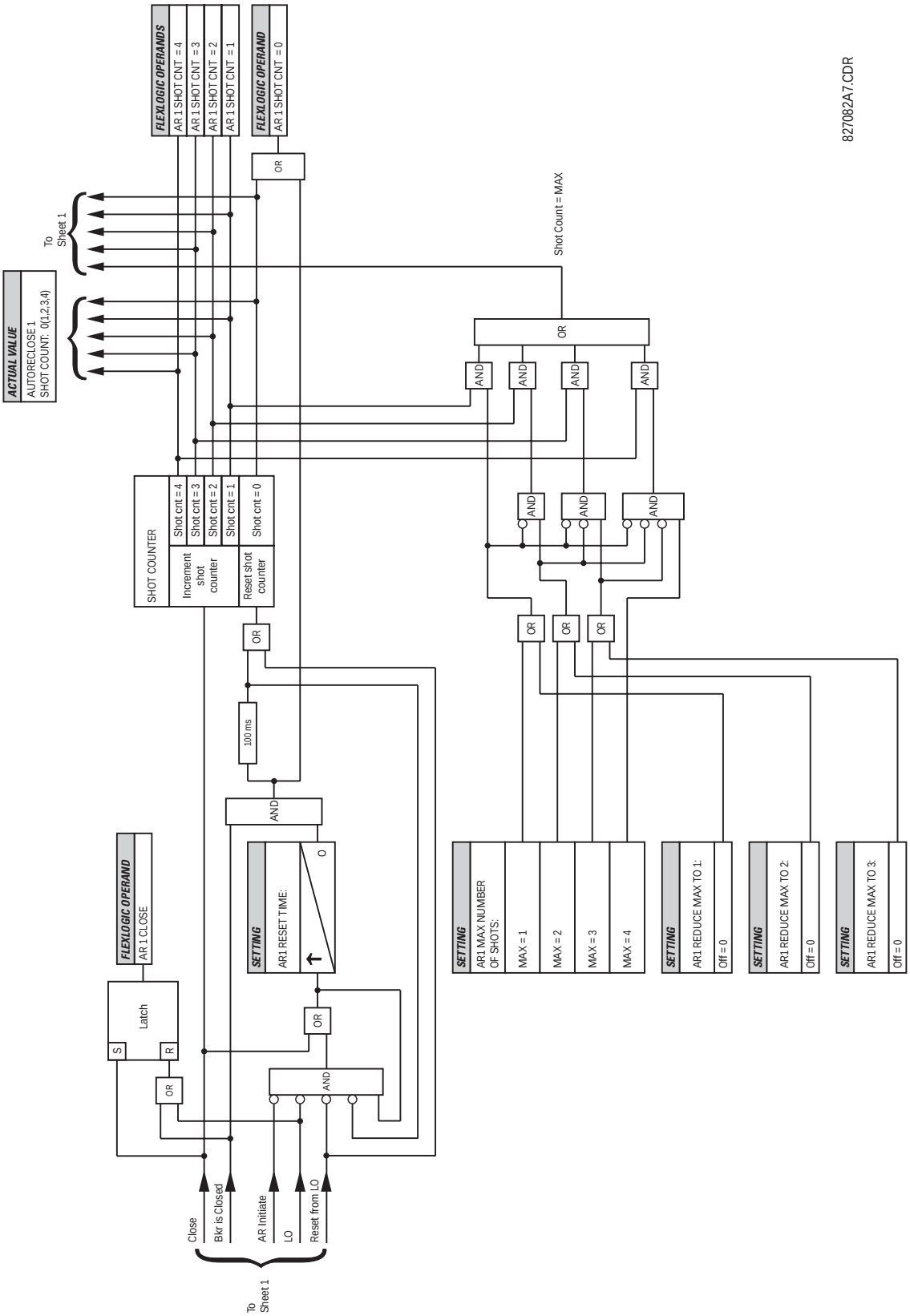

Figure 5–30: AUTORECLOSURE SCHEME LOGIC (Sheet 2 of 2)

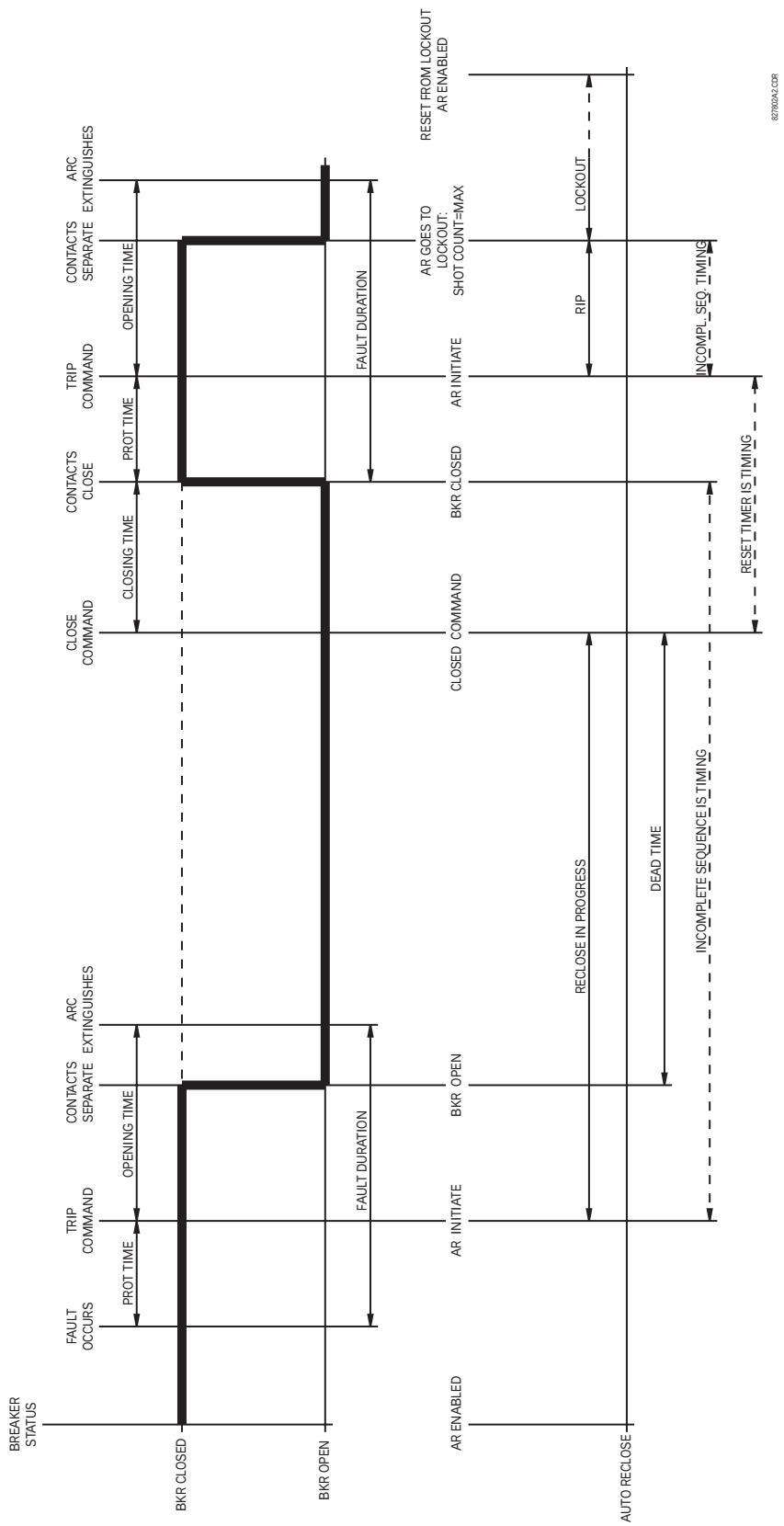

Figure 5–31: SINGLE SHOT AUTORECLOSING SEQUENCE - PERMANENT FAULT

5.6.5 DIGITAL ELEMENTS

PATH: SETTINGS ⇨⇩ CONTROL ELEMENTS ⇨⇩ DIGITAL ELEMENTS

```
■ DIGITAL ELEMENTS
■
```

```
■ DIGITAL ELEMENT 1
■
```

MESSAGE	DIGITAL ELEMENT 1 FUNCTION: Disabled	*Range: Disabled, Enabled*
MESSAGE	DIG ELEM 1 NAME: Dig Element 1	*Range: 16 alphanumeric characters*
MESSAGE	DIG ELEM 1 INPUT: Off	*Range: FlexLogic™ operand*
MESSAGE	DIG ELEM 1 PICKUP DELAY: 0.000 s	*Range: 0.000 to 999999.999 s in steps of 0.001*
MESSAGE	DIG ELEM 1 RESET DELAY: 0.000 s	*Range: 0.000 to 999999.999 s in steps of 0.001*
MESSAGE	DIG ELEM 1 BLOCK: Off	*Range: FlexLogic™ operand*
MESSAGE	DIGITAL ELEMENT 1 TARGET: Self-reset	*Range: Self-reset, Latched, Disabled*
MESSAGE	DIGITAL ELEMENT 1 EVENTS: Disabled	*Range: Disabled, Enabled*

```
■ DIGITAL ELEMENT 2
■
↓
■ DIGITAL ELEMENT 16
■
```

There are 16 identical Digital Elements available, numbered 1 to 16. A Digital Element can monitor any FlexLogic™ operand and present a target message and/or enable events recording depending on the output operand state. The digital element settings include a 'name' which will be referenced in any target message, a blocking input from any selected FlexLogic™ operand, and a timer for pickup and reset delays for the output operand.

DIGITAL ELEMENT 1 INPUT: Selects a FlexLogic™ operand to be monitored by the Digital Element.

DIGITAL ELEMENT 1 PICKUP DELAY: Sets the time delay to pickup. If a pickup delay is not required, set to "0".

DIGITAL ELEMENT 1 RESET DELAY: Sets the time delay to reset. If a reset delay is not required, set to "0".

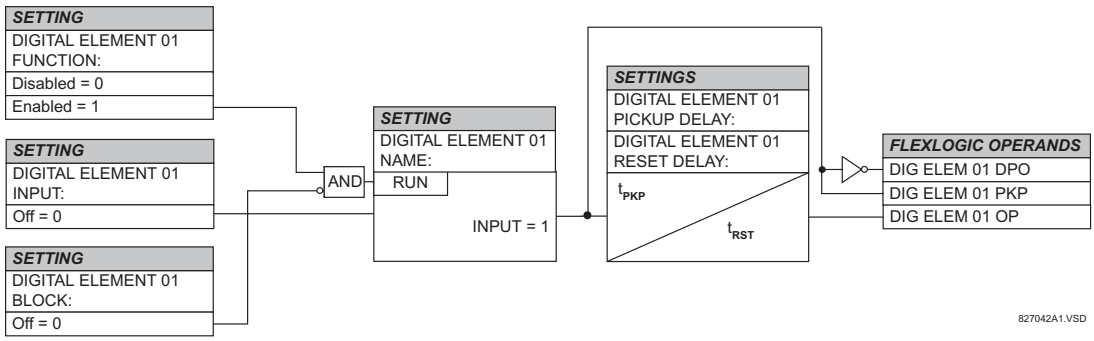

Figure 5–32: DIGITAL ELEMENT SCHEME LOGIC

a) CIRCUIT MONITORING APPLICATIONS

Some versions of the digital input modules include an active Voltage Monitor circuit connected across Form-A contacts. The Voltage Monitor circuit limits the trickle current through the output circuit (see Technical Specifications for Form-A).

As long as the current through the Voltage Monitor is above a threshold (see Technical Specifications for Form-A), the FlexLogic™ operand "Cont Op # VOn" will be set. (# represents the output contact number). If the output circuit has a high resistance or the DC current is interrupted, the trickle current will drop below the threshold and the FlexLogic™ operand "Cont Op # VOff" will be set. Consequently, the state of these operands can be used as indicators of the integrity of the circuits in which Form-A contacts are inserted.

b) BREAKER TRIP CIRCUIT INTEGRITY MONITORING – EXAMPLE 1

In many applications it is desired to monitor the breaker trip circuit integrity so problems can be detected before a trip operation is required. The circuit is considered to be healthy when the Voltage Monitor connected across the trip output contact detects a low level of current, well below the operating current of the breaker trip coil. If the circuit presents a high resistance, the trickle current will fall below the monitor threshold and an alarm would be declared.

In most breaker control circuits, the trip coil is connected in series with a breaker auxiliary contact which is open when the breaker is open (see diagram below). To prevent unwanted alarms in this situation, the trip circuit monitoring logic must include the breaker position.

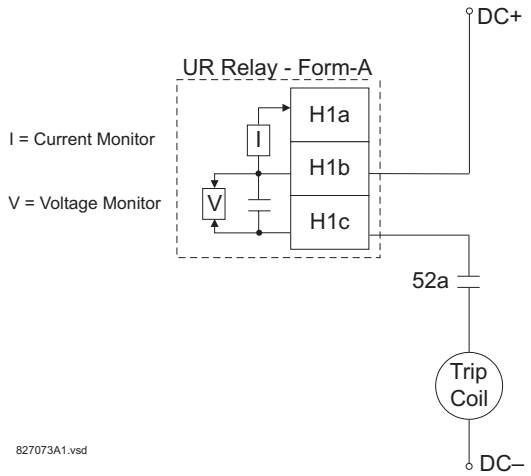

Figure 5–33: TRIP CIRCUIT EXAMPLE 1

Assume the output contact H1 is a trip contact. Using the contact output settings, this output will be given an ID name, e.g. "Cont Op 1". Assume a 52a breaker auxiliary contact is connected to contact input H7a to monitor breaker status. Using the contact input settings, this input will be given an ID name, e.g. "Cont Ip 1" and will be set "ON" when the breaker is closed. Using Digital Element 1 to monitor the breaker trip circuit, the settings will be:

```
■ DIGITAL ELEMENT 1
■
```

```
DIGITAL ELEMENT  1
FUNCTION: Enabled
```

MESSAGE

```
DIG ELEM  1 NAME:
Bkr Trip Cct Out
```

MESSAGE

```
DIG ELEM  1 INPUT:
Cont Op 1 VOff
```

MESSAGE

```
DIG ELEM  1 PICKUP
DELAY:      0.200 s
```

MESSAGE

```
DIG ELEM  1 RESET
DELAY:      0.100 s
```

MESSAGE

```
DIG ELEM  1 BLOCK:
Cont Ip 1 Off
```

```
MESSAGE   DIGITAL ELEMENT  1
          TARGET: Self-reset

MESSAGE   DIGITAL ELEMENT  1
          EVENTS: Enabled
```

NOTE: The PICKUP DELAY setting should be greater than the operating time of the breaker to avoid nuisance alarms.

c) BREAKER TRIP CIRCUIT INTEGRITY MONITORING – EXAMPLE 2

If it is required to monitor the trip circuit continuously, independent of the breaker position (open or closed), a method to maintain the monitoring current flow through the trip circuit when the breaker is open must be provided (as shown in Figure: TRIP CIRCUIT - EXAMPLE 2). This can be achieved by connecting a suitable resistor (as listed in the VALUES OF RESISTOR 'R' table) across the auxiliary contact in the trip circuit. In this case, it is not required to supervise the monitoring circuit with the breaker position - the BLOCK setting is selected to Off. In this case, the settings will be:

```
■ DIGITAL ELEMENT  1      DIGITAL ELEMENT  1
■                         FUNCTION: Enabled

MESSAGE                   DIG ELEM  1 NAME:
                          Bkr Trip Cct Out

MESSAGE                   DIG ELEM  1 INPUT:
                          Cont Op 1 VOff

MESSAGE                   DIG ELEM  1 PICKUP
                          DELAY:      0.200 s

MESSAGE                   DIG ELEM  1 RESET
                          DELAY:      0.100 s

MESSAGE                   DIG ELEM  1 BLOCK:
                          Off

MESSAGE                   DIGITAL ELEMENT  1
                          TARGET: Self-reset

MESSAGE                   DIGITAL ELEMENT  1
                          EVENTS: Enabled
```

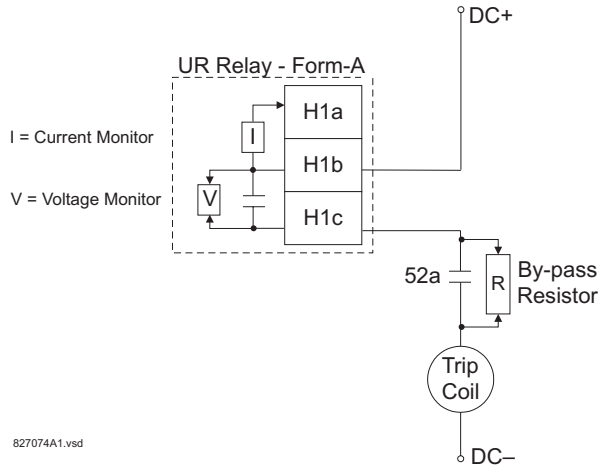

Table 5–23: VALUES OF RESISTOR 'R'

POWER SUPPLY (V DC)	RESISTANCE (OHMS)	POWER (WATTS)
24	1000	2
30	5000	2
48	10000	2
110	25000	5
125	25000	5
250	50000	5

Figure 5–34: TRIP CIRCUIT EXAMPLE 2

PATH: SETTINGS ⇨⇩ INPUTS/OUTPUTS ⇨ CONTACT INPUTS

```
■ CONTACT INPUTS
■
```

```
■ CONTACT INPUT H5a
■
```

MESSAGE

```
CONTACT INPUT H5a ID:
Cont Ip 1
```

Range: up to 12 alphanumeric characters

MESSAGE

```
CONTACT INPUT H5a
DEBNCE TIME: 2.0 ms
```

Range: 0.0 to 16.0 ms in steps of 0.5

MESSAGE

```
CONTACT INPUT H5a
EVENTS: Disabled
```

Range: Disabled, Enabled

↓

```
■ CONTACT INPUT xxx
■
```

```
■ CONTACT INPUT
■ THRESHOLDS
```

MESSAGE

```
Ips H5a,H5c,H6a,H6c
THRESHOLD: 33 Vdc
```

Range: 17, 33, 84, 166 Vdc

MESSAGE

```
Ips H7a,H7c,H8a,H8c
THRESHOLD: 33 Vdc
```

Range: 17, 33, 84, 166 Vdc

↓

MESSAGE

```
Ips xxx,xxx,xxx,xxx
THRESHOLD: 33 Vdc
```

Range: 17, 33, 84, 166 Vdc

The contact inputs menu contains configuration settings for each contact input as well as voltage thresholds for each group of four contact inputs. Upon startup, the relay processor determines (from an assessment of the installed modules) which contact inputs are available and then display settings for only those inputs.

An alphanumeric ID may be assigned to a contact input for diagnostic, setting, and event recording purposes. The "Contact Ip X On" (Logic 1) FlexLogic™ operand corresponds to contact input "X" being closed, while "Contact Input X Off" corresponds to contact input "X" being open. The **CONTACT INPUT DEBNCE TIME** defines the time required for the contact to overcome 'contact bouncing' conditions. As this time differs for different contact types and manufacturers, set it as a maximum contact debounce time (per manufacturer specifications) plus some margin to ensure proper operation. If **CONTACT INPUT EVENTS** is set to "Enabled", every change in the contact input state will trigger an event.

A raw status is scanned for all Contact Inputs synchronously at the constant rate of 0.5 ms as shown in the figure below. The DC input voltage is compared to a user-settable threshold. A new contact input state must be maintained for a user-settable debounce time in order for the F35 to validate the new contact state. In the figure below, the debounce time is set at 2.5 ms; thus the 6th sample in a row validates the change of state (mark no.1 in the diagram). Once validated (debounced), the contact input asserts a corresponding FlexLogic™ operand and logs an event as per user setting.

A time stamp of the first sample in the sequence that validates the new state is used when logging the change of the contact input into the Event Recorder (mark no. 2 in the diagram).

Protection and control elements, as well as FlexLogic™ equations and timers, are executed eight times in a power system cycle. The protection pass duration is controlled by the frequency tracking mechanism. The FlexLogic™ operand reflecting the debounced state of the contact is updated at the protection pass following the validation (marks no. 3 and 4 on the figure below). The update is performed at the beginning of the protection pass so all protection and control functions, as well as FlexLogic™ equations, are fed with the updated states of the contact inputs.

The FlexLogic™ operand response time to the contact input change is equal to the debounce time setting plus up to one protection pass (variable and depending on system frequency if frequency tracking enabled). If the change of state occurs just after a protection pass, the recognition is delayed until the subsequent protection pass; that is, by the entire duration of the protection pass. If the change occurs just prior to a protection pass, the state is recognized immediately. Statistically a delay of half the protection pass is expected. Owing to the 0.5 ms scan rate, the time resolution for the input contact is below 1msec.

For example, 8 protection passes per cycle on a 60 Hz system correspond to a protection pass every 2.1 ms. With a contact debounce time setting of 3.0 ms, the FlexLogic™ operand-assert time limits are: 3.0 + 0.0 = 3.0 ms and 3.0 + 2.1 = 5.1 ms. These time limits depend on how soon the protection pass runs after the debouncing time.

Regardless of the contact debounce time setting, the contact input event is time-stamped with a 1 µs accuracy using the time of the first scan corresponding to the new state (mark no. 2 below). Therefore, the time stamp reflects a change in the DC voltage across the contact input terminals that was not accidental as it was subsequently validated using the debounce timer. Keep in mind that the associated FlexLogic™ operand is asserted/de-asserted later, after validating the change.

The debounce algorithm is symmetrical: the same procedure and debounce time are used to filter the LOW-HIGH (marks no.1, 2, 3, and 4 in the figure below) and HIGH-LOW (marks no.5, 6, 7, and 8 below) transitions.

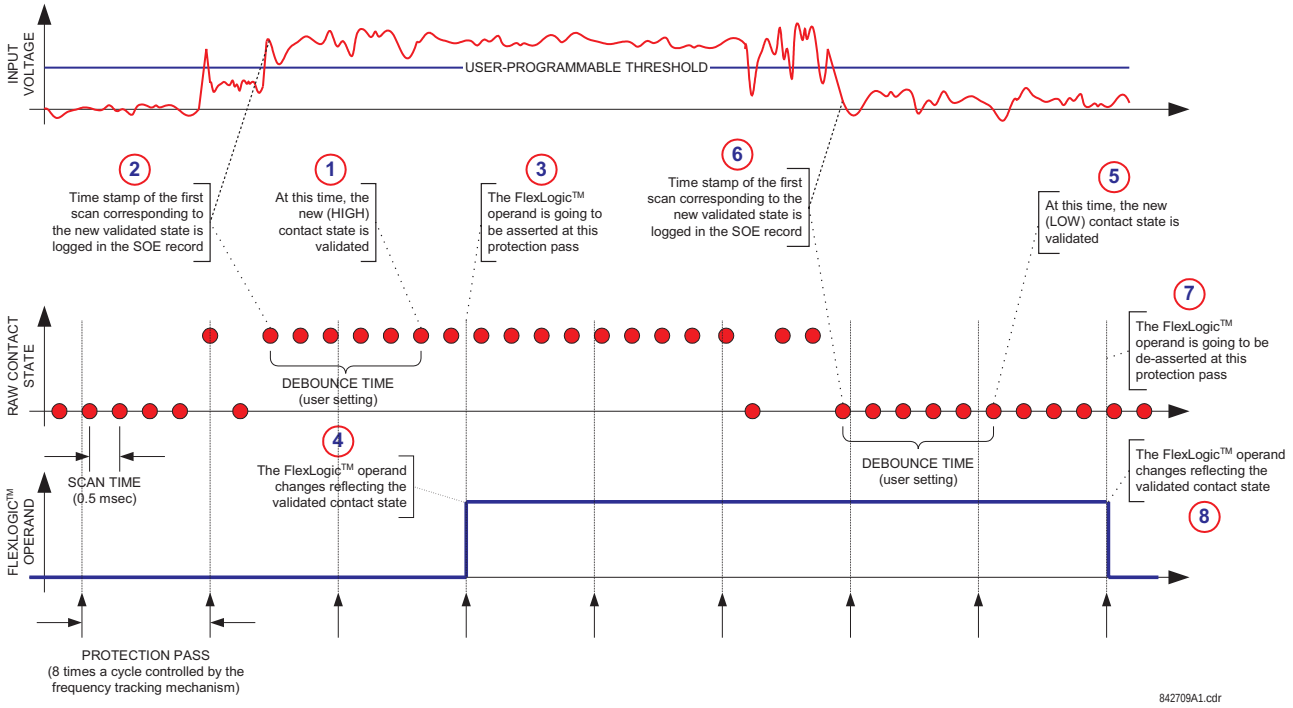

Figure 5–35: INPUT CONTACT DEBOUNCING MECHANISM AND TIME-STAMPING SAMPLE TIMING

Contact inputs are isolated in groups of four to allow connection of wet contacts from different voltage sources for each group. The **CONTACT INPUT THRESHOLDS** determine the minimum voltage required to detect a closed contact input. This value should be selected according to the following criteria: 16 for 24 V sources, 30 for 48 V sources, 80 for 110 to 125 V sources and 140 for 250 V sources.

For example, to use contact input H5a as a status input from the breaker 52b contact to seal-in the trip relay and record it in the Event Records menu, make the following settings changes:

CONTACT INPUT H5A ID: "Breaker Closed (52b)"
CONTACT INPUT H5A EVENTS: "Enabled"

Note that the 52b contact is closed when the breaker is open and open when the breaker is closed.

PATH: SETTINGS ⇨⇩ INPUTS/OUTPUTS ⇨⇩ VIRTUAL INPUTS ⇨ VIRTUAL INPUT 1(32)

```
■ VIRTUAL INPUT  1
■
```

```
VIRTUAL INPUT  1
FUNCTION: Disabled
```

Range: Disabled, Enabled

MESSAGE

```
VIRTUAL INPUT  1 ID:
Virt Ip 1
```

Range: Up to 12 alphanumeric characters

MESSAGE

```
VIRTUAL INPUT  1
TYPE: Latched
```

Range: Self-Reset, Latched

MESSAGE

```
VIRTUAL INPUT  1
EVENTS: Disabled
```

Range: Disabled, Enabled

There are 32 virtual inputs that can be individually programmed to respond to input signals from the keypad (COMMANDS menu) and non-UCA2 communications protocols only. All virtual input operands are defaulted to OFF = 0 unless the appropriate input signal is received. **Virtual input states are preserved through a control power loss**.

VIRTUAL INPUT 1 FUNCTION:

If set to Disabled, the input will be forced to 'OFF' (Logic 0) regardless of any attempt to alter the input. If set to Enabled, the input will operate as shown on the scheme logic diagram, and generate output FlexLogic™ operands in response to received input signals and the applied settings.

VIRTUAL INPUT 1 TYPE:

There are two types of operation, Self-Reset and Latched. If set to Self-Reset, when the input signal transits from OFF = 0 to ON = 1, the output operand will be set to ON = 1 for only one evaluation of the FlexLogic™ equations and then return to OFF = 0. If set to Latched, the virtual input sets the state of the output operand to the same state as the most recent received input, ON =1 or OFF = 0.

NOTE

Virtual Input operating mode Self-Reset generates the output operand for a single evaluation of the FlexLogic™ equations. If the operand is to be used anywhere other than internally in a FlexLogic™ equation, it will most probably have to be lengthened in time. A FlexLogic™ Timer with a delayed reset can perform this function.

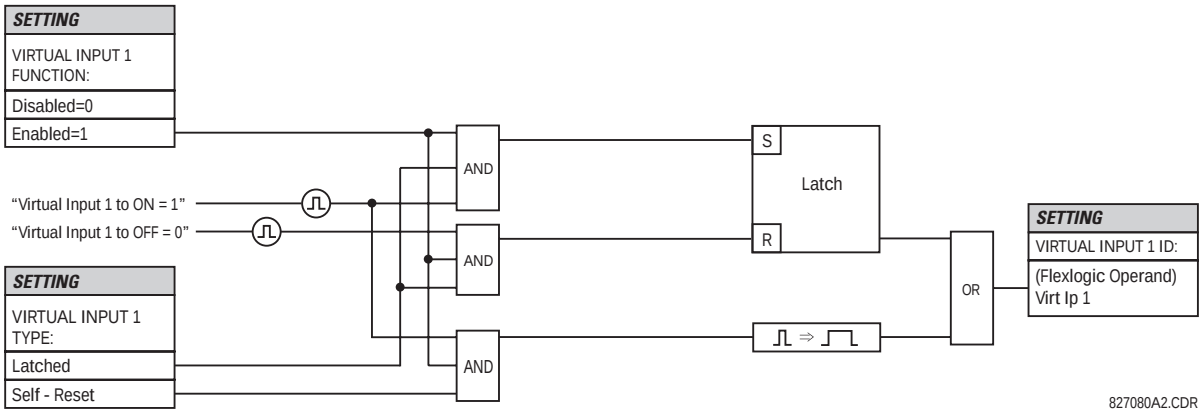

Figure 5–36: VIRTUAL INPUTS SCHEME LOGIC

5.7.3 UCA SBO TIMER

PATH: SETTINGS ⇨⇩ INPUTS/OUTPUTS ⇨⇩ VIRTUAL INPUTS ⇨⇩ UCA SBO TIMER

```
■ UCA SBO TIMER
■
```

```
UCA SBO TIMEOUT:
  30 s
```

Range: 1 to 60 s in steps of 1

The Select-Before-Operate timer sets the interval from the receipt of an Operate signal to the automatic de-selection of the virtual input, so that an input does not remain selected indefinitely (this is used only with the UCA Select-Before-Operate feature).

5.7.4 CONTACT OUTPUTS

PATH: SETTINGS ⇨⇩ INPUTS/OUTPUTS ⇨⇩ CONTACT OUTPUTS ⇨ CONTACT OUTPUT H1

```
■ CONTACT OUTPUT H1
■
```

```
CONTACT OUTPUT H1 ID
Cont Op 1
```

Range: Up to 12 alphanumeric characters

MESSAGE

```
OUTPUT H1 OPERATE:
Off
```

Range: Flexlogic™ operand

MESSAGE

```
OUTPUT H1 SEAL-IN:
Off
```

Range: Flexlogic™ operand

MESSAGE

```
CONTACT OUTPUT H1
EVENTS: Enabled
```

Range: Disabled, Enabled

5

Upon startup of the relay, the main processor will determine from an assessment of the modules installed in the chassis which contact outputs are available and present the settings for only these outputs.

An ID may be assigned to each contact output. The signal that can OPERATE a contact output may be any FlexLogic™ operand (virtual output, element state, contact input, or virtual input). An additional FlexLogic™ operand may be used to SEAL-IN the relay. Any change of state of a contact output can be logged as an Event if programmed to do so.

EXAMPLE:

The trip circuit current is monitored by providing a current threshold detector in series with some Form-A contacts (see the TRIP CIRCUIT EXAMPLE in the DIGITAL ELEMENTS section). The monitor will set a flag (see Technical Specifications for Form-A). The name of the FlexLogic™ operand set by the monitor, consists of the output relay designation, followed by the name of the flag; e.g. ‘Cont Op 1 IOn’ or ‘Cont Op 1 IOff’.

In most breaker control circuits, the trip coil is connected in series with a breaker auxiliary contact used to interrupt current flow after the breaker has tripped, to prevent damage to the less robust initiating contact. This can be done by monitoring an auxiliary contact on the breaker which opens when the breaker has tripped, but this scheme is subject to incorrect operation caused by differences in timing between breaker auxiliary contact change-of-state and interruption of current in the trip circuit. The most dependable protection of the initiating contact is provided by directly measuring current in the tripping circuit, and using this parameter to control resetting of the initiating relay. This scheme is often called "trip seal-in".

This can be realized in the UR using the ‘Cont Op 1 IOn’ FlexLogic™ operand to seal-in the Contact Output. For example,

```
■ CONTACT OUTPUT H1
■
```

```
CONTACT OUTPUT H1 ID
Cont Op 1
```

MESSAGE

```
OUTPUT H1 OPERATE:
Off
```

MESSAGE

```
OUTPUT H1 SEAL-IN:
Cont Op 1  IOn
```

MESSAGE

```
CONTACT OUTPUT H1
EVENTS: Enabled
```

5.7.5 VIRTUAL OUTPUTS

PATH: SETTINGS ⇨⇩ INPUTS/OUTPUTS ⇨⇩ VIRTUAL OUTPUTS ⇨ VIRTUAL OUTPUT 1

```
■ VIRTUAL OUTPUT  1
■
```

```
VIRTUAL OUTPUT  1 ID
Virt Op 1
```

Range: Up to 12 alphanumeric characters

MESSAGE

```
VIRTUAL OUTPUT  1
EVENTS: Disabled
```

Range: Disabled, Enabled

There are 64 virtual outputs that may be assigned via FlexLogic™. If not assigned, the output will be forced to 'OFF' (Logic 0). An ID may be assigned to each virtual output. Virtual outputs are resolved in each pass through the evaluation of the FlexLogic™ equations. Any change of state of a virtual output can be logged as an event if programmed to do so.

For example, if Virtual Output 1 is the trip signal from FlexLogic™ and the trip relay is used to signal events, the settings would be programmed as follows:

```
■ VIRTUAL OUTPUT  1
■
```

```
VIRTUAL OUTPUT  1 ID
Trip
```

MESSAGE

```
VIRTUAL OUTPUT  1
EVENTS: Disabled
```

5.7.6 REMOTE DEVICES

a) REMOTE INPUTS / OUTPUTS - OVERVIEW

Remote inputs and outputs, which are a means of exchanging information regarding the state of digital points between remote devices, are provided in accordance with the Electric Power Research Institute's (EPRI) UCA2 "Generic Object Oriented Substation Event (GOOSE)" specifications.

NOTE

The UCA2 specification requires that communications between devices be implemented on Ethernet communications facilities. For UR relays, Ethernet communications is provided only on the type 9C and 9D versions of the CPU module.

The sharing of digital point state information between GOOSE equipped relays is essentially an extension to FlexLogic™ to allow distributed FlexLogic™ by making operands available to/from devices on a common communications network. In addition to digital point states, GOOSE messages identify the originator of the message and provide other information required by the communication specification. All devices listen to network messages and capture data from only those messages that have originated in selected devices.

GOOSE messages are designed to be short, high priority and with a high level of reliability. The GOOSE message structure contains space for 128 bit pairs representing digital point state information. The UCA specification provides 32 "DNA" bit pairs, which are status bits representing pre-defined events. All remaining bit pairs are "UserSt" bit pairs, which are status bits representing user-definable events. The UR implementation provides 32 of the 96 available UserSt bit pairs.

The UCA2 specification includes features that are used to cope with the loss of communication between transmitting and receiving devices. Each transmitting device will send a GOOSE message upon a successful power-up, when the state of any included point changes, or after a specified interval (the "default update" time) if a change-of-state has not occurred. The transmitting device also sends a "hold time" which is set to three times the programmed default time, which is required by the receiving device.

Receiving devices are constantly monitoring the communications network for messages they require, as recognized by the identification of the originating device carried in the message. Messages received from remote devices include the message "hold" time for the device. The receiving relay sets a timer assigned to the originating device to the "hold" time interval, and if it has not received another message from this device at time-out, the remote device is declared to be non-communicating, so it will use the programmed default state for all points from that specific remote device. This mechanism allows a receiving device to fail to detect a single transmission from a remote device which is sending messages at the slowest possible rate, as set by its "default update" timer, without reverting to use of the programmed default states. If a message is received from a remote device before the "hold" time expires, all points for that device are updated to the states contained in the message and the hold timer is restarted. The status of a remote device, where 'Offline' indicates 'non-communicating', can be displayed.

The GOOSE facility provides for 64 remote inputs and 32 remote outputs.

b) LOCAL DEVICES - ID of Device for Transmitting GOOSE Messages

In a UR relay, the device ID that identifies the originator of the message is programmed in the **SETTINGS ⇨ PRODUCT SETUP ⇨⇩ INSTALLATION ⇨⇩ RELAY NAME** setting.

c) REMOTE DEVICES - ID of Device for Receiving GOOSE Messages

PATH: SETTINGS ⇨⇩ INPUTS/OUTPUTS ⇨⇩ REMOTE DEVICES ⇨ REMOTE DEVICE 1(16)

```
■ REMOTE DEVICE  1
■
```

```
REMOTE DEVICE  1 ID:
Remote Device 1
```

Range: up to 20 alphanumeric characters

Sixteen Remote Devices, numbered from 1 to 16, can be selected for setting purposes. A receiving relay must be programmed to capture messages from only those originating remote devices of interest. This setting is used to select specific remote devices by entering (bottom row) the exact identification (ID) assigned to those devices.

5.7.7 REMOTE INPUTS

PATH: SETTINGS ⇨⇩ INPUTS/OUTPUTS ⇨⇩ REMOTE INPUTS ⇨ REMOTE INPUT 1(32)

```
■ REMOTE INPUT 1
■
```

```
REMOTE IN  1 DEVICE:
Remote Device  1
```

Range: 1 to 16 inclusive

MESSAGE

```
REMOTE IN  1 BIT
PAIR: None
```

Range: None, DNA-1 to DNA-32, UserSt-1 to UserSt-32

MESSAGE

```
REMOTE IN  1 DEFAULT
STATE: Off
```

Range: On, Off

MESSAGE

```
REMOTE IN  1
EVENTS: Disabled
```

Range: Disabled, Enabled

Remote Inputs which create FlexLogic™ operands at the receiving relay, are extracted from GOOSE messages originating in remote devices. The relay provides 32 Remote Inputs, each of which can be selected from a list consisting of 64 selections: DNA-1 through DNA-32 and UserSt-1 through UserSt-32. The function of DNA inputs is defined in the UCA2 specifications and is presented in the UCA2 DNA ASSIGNMENTS table in the Remote Outputs section. The function of UserSt inputs is defined by the user selection of the FlexLogic™ operand whose state is represented in the GOOSE message. A user must program a DNA point from the appropriate operand.

Remote Input 1 must be programmed to replicate the logic state of a specific signal from a specific remote device for local use. This programming is performed via the three settings shown above.

REMOTE IN 1 DEVICE selects the number (1 to 16) of the Remote Device which originates the required signal, as previously assigned to the remote device via the setting **REMOTE DEVICE NN ID** (see REMOTE DEVICES section). **REMOTE IN 1 BIT PAIR** selects the specific bits of the GOOSE message required. **REMOTE IN 1 DEFAULT STATE** selects the logic state for this point if the local relay has just completed startup or the remote device sending the point is declared to be non-communicating.

NOTE

For more information on GOOSE specifications, see REMOTE INPUTS/OUTPUTS OVERVIEW in the REMOTE DEVICES section.

5.7.8 REMOTE OUTPUTS: DNA BIT PAIRS

PATH: SETTINGS ⇨⇩ INPUTS/OUTPUTS ⇨⇩ REMOTE OUTPUTS DNA BIT PAIRS ⇨ REMOTE OUPUTS DNA- 1 BIT PAIR

```
■ REMOTE OUTPUTS
■ DNA- 1 BIT PAIR
```

```
DNA- 1 OPERAND:
Off
```

Range: FlexLogic™ Operand

MESSAGE

```
DNA- 1 EVENTS:
Disabled
```

Range: Disabled, Enabled

Remote Outputs (1 to 32) are FlexLogic™ operands inserted into GOOSE messages that are transmitted to remote devices on a LAN. Each digital point in the message must be programmed to carry the state of a specific FlexLogic™ operand. The above operand setting represents a specific DNA function (as shown in the following table) to be transmitted.

Table 5–24: UCA DNA2 ASSIGNMENTS

DNA	DEFINITION	INTENDED FUNCTION	LOGIC 0	LOGIC 1
1	OperDev		Trip	Close
2	Lock Out		LockoutOff	LockoutOn
3	Initiate Reclosing	Initiate remote reclose sequence	InitRecloseOff	InitRecloseOn
4	Block Reclosing	Prevent/cancel remote reclose sequence	BlockOff	BlockOn
5	Breaker Failure Initiate	Initiate remote breaker failure scheme	BFIOff	BFIOn
6	Send Transfer Trip	Initiate remote trip operation	TxXfrTripOff	TxXfrTripOn
7	Receive Transfer Trip	Report receipt of remote transfer trip command	RxXfrTripOff	RxXfrTripOn
8	Send Perm	Report permissive affirmative	TxPermOff	TxPermOn
9	Receive Perm	Report receipt of permissive affirmative	RxPermOff	RxPermOn
10	Stop Perm	Override permissive affirmative	StopPermOff	StopPermOn
11	Send Block	Report block affirmative	TxBlockOff	TxBlockOn
12	Receive Block	Report receipt of block affirmative	RxBlockOff	RxBlockOn
13	Stop Block	Override block affirmative	StopBlockOff	StopBlockOn
14	BkrDS	Report breaker disconnect 3-phase state	Open	Closed
15	BkrPhsADS	Report breaker disconnect phase A state	Open	Closed
16	BkrPhsBDS	Report breaker disconnect phase B state	Open	Closed
17	BkrPhsCDS	Report breaker disconnect phase C state	Open	Closed
18	DiscSwDS		Open	Closed
19	Interlock DS		DSLockOff	DSLockOn
20	LineEndOpen	Report line open at local end	Open	Closed
21	Status	Report operating status of local GOOSE device	Offline	Available
22	Event		EventOff	EventOn
23	Fault Present		FaultOff	FaultOn
24	Sustained Arc	Report sustained arc	SustArcOff	SustArcOn
25	Downed Conductor	Report downed conductor	DownedOff	DownedOn
26	Sync Closing		SyncClsOff	SyncClsOn
27	Mode	Report mode status of local GOOSE device	Normal	Test
28→32	Reserved			

NOTE

For more information on GOOSE specifications, see REMOTE INPUTS/OUTPUTS OVERVIEW in the REMOTE DEVICES section.

5.7.9 REMOTE OUTPUTS: UserSt BIT PAIRS

PATH: SETTINGS ⇨⇩ INPUTS/OUTPUTS ⇨⇩ REMOTE OUTPUTS UserSt BIT PAIRS ⇨ REMOTE OUTPUTS UserSt- 1 BIT PAIR

```
■ REMOTE OUTPUTS
■ UserSt- 1 BIT PAIR
```

```
UserSt- 1 OPERAND:
Off
```

Range: FlexLogic™ operand

MESSAGE

```
UserSt- 1 EVENTS:
Disabled
```

Range: Disabled, Enabled

Remote Outputs 1 to 32 originate as GOOSE messages to be transmitted to remote devices. Each digital point in the message must be programmed to carry the state of a specific FlexLogic™ operand. The setting above is used to select the operand which represents a specific UserSt function (as selected by the user) to be transmitted.

The following setting represents the time between sending GOOSE messages when there has been no change of state of any selected digital point. This setting is located under the menu heading COMMUNICATIONS in the SETTINGS \ PRODUCT SETUP section.

```
DEFAULT GOOSE UPDATE
TIME: 60 s
```

Range: 1 to 60 s in steps of 1

NOTE

For more information on GOOSE specifications, see REMOTE INPUTS/OUTPUTS – OVERVIEW in the REMOTE DEVICES section.

5.7.10 RESETTING

5

PATH: SETTINGS ⇨⇩ INPUTS/OUTPUTS ⇨⇩ RESETTING

```
■ RESETTING
■
```

```
RESET OPERAND:
Off
```

Range: FlexLogic™ operand

Some events can be programmed to latch the faceplate LED event indicators and the target message on the display. Once set, the latching mechanism will hold all of the latched indicators or messages in the set state after the initiating condition has cleared until a RESET command is received to return these latches (not including FlexLogic™ latches) to the reset state. The RESET command can be sent from the faceplate RESET button, a remote device via a communications channel, or any programmed operand.

When the RESET command is received by the relay, two FlexLogic™ operands are created. These operands, which are stored as events, reset the latches if the initiating condition has cleared. The three sources of RESET commands each create the FlexLogic™ operand "RESET OP". Each individual source of a RESET command also creates its individual operand RESET OP (PUSHBUTTON), RESET OP (COMMS) or RESET OP (OPERAND) to identify the source of the command. The setting shown above selects the operand that will create the RESET OP (OPERAND) operand.

5.8.1 DCMA INPUTS

PATH: SETTINGS ⇨⇩ TRANSDUCER I/O ⇨⇩ DCMA INPUTS

```
■ DCMA INPUTS
■
```

```
■ DCMA INPUT H1
■
```

↓

MESSAGE

```
■ DCMA INPUT U8
■
```

Hardware and software is provided to receive signals from external transducers and convert these signals into a digital format for use as required. The relay will accept inputs in the range of –1 to +20 mA DC, suitable for use with most common transducer output ranges; all inputs are assumed to be linear over the complete range. Specific hardware details are contained in the HARDWARE chapter.

Before the DCMA input signal can be used, the value of the signal measured by the relay must be converted to the range and quantity of the external transducer primary input parameter, such as DC voltage or temperature. The relay simplifies this process by internally scaling the output from the external transducer and displaying the actual primary parameter.

DCMA input channels are arranged in a manner similar to CT and VT channels. The user configures individual channels with the settings shown here.

The channels are arranged in sub-modules of two channels, numbered from 1 through 8 from top to bottom. On power-up, the relay will automatically generate configuration settings for every channel, based on the order code, in the same general manner that is used for CTs and VTs. Each channel is assigned a slot letter followed by the row number, 1 through 8 inclusive, which is used as the channel number. The relay generates an actual value for each available input channel.

Settings are automatically generated for every channel available in the specific relay as shown below for the first channel of a type 5F transducer module installed in slot M.

```
■ DCMA INPUT M1
■
```

```
DCMA INPUT M1
FUNCTION: Disabled
```

Range: Disabled, Enabled

MESSAGE

```
DCMA INPUT M1 ID:
DCMA Ip 1
```

Range: Up to 20 alphanumeric characters

MESSAGE

```
DCMA INPUT M1
UNITS: µA
```

Range: 6 alphanumeric characters

MESSAGE

```
DCMA INPUT M1
RANGE: 0 to -1 mA
```

Range: 0 to –1, 0 to +1, –1 to +1, 0 to 5, 0 to 10, 0 to 20

MESSAGE

```
DCMA INPUT M1 MIN
VALUE:     0.000
```

Range: –9999.999 to +9999.999 in steps of 0.001

MESSAGE

```
DCMA INPUT M1 MAX
VALUE:     0.000
```

Range: –9999.999 to +9999.999 in steps of 0.001

The function of the channel may be either "Enabled" or "Disabled." If Disabled, there will not be an actual value created for the channel. An alphanumeric "ID" is assigned to the channel - this ID will be included in the display of the channel actual value, along with the programmed "UNITS" associated with the parameter measured by the transducer, such as Volt, °C, MegaWatts, etc. This ID is also used to reference the channel as the input parameter to features designed to measure this type of parameter. The RANGE setting is used to select the specific mA DC range of the transducer connected to the input channel.

The MIN VALUE and MAX VALUE settings are used to program the span of the transducer in primary units. For example, a temperature transducer might have a span from 0 to 250°C; in this case the MIN value would be 0 and the MAX value 250. Another example would be a Watt transducer with a span from –20 to +180 MW; in this case the MIN value would be –20 and the MAX value 180. Intermediate values between the MIN and MAX are scaled linearly.

5.8.2 RTD INPUTS

PATH: SETTINGS ⇨⇩ TRANSDUCER I/O ⇨⇩ RTD INPUTS

```
■ RTD INPUTS
■
```

```
■ RTD INPUT H1
■
```

↓

MESSAGE

```
■ RTD INPUT U8
■
```

Hardware and software is provided to receive signals from external Resistance Temperature Detectors and convert these signals into a digital format for use as required. These channels are intended to be connected to any of the RTD types in common use. Specific hardware details are contained in the HARDWARE chapter.

RTD input channels are arranged in a manner similar to CT and VT channels. The user configures individual channels with the settings shown here.

The channels are arranged in sub-modules of two channels, numbered from 1 through 8 from top to bottom. On power-up, the relay will automatically generate configuration settings for every channel, based on the order code, in the same general manner that is used for CTs and VTs. Each channel is assigned a slot letter followed by the row number, 1 through 8 inclusive, which is used as the channel number. The relay generates an actual value for each available input channel.

Settings are automatically generated for every channel available in the specific relay as shown below for the first channel of a type 5C transducer module installed in slot M.

5

```
■ RTD INPUT M5
■
```

```
RTD INPUT M5
FUNCTION: Disabled
```

Range: Disabled, Enabled

MESSAGE

```
RTD INPUT M5 ID:
RTD Ip 1
```

Range: Up to 20 alphanumeric characters

MESSAGE

```
RTD INPUT M5 TYPE:
100Ω Nickel
```

Range: 100Ω Nickel, 10Ω Copper, 100Ω Platinum, 120Ω Nickel

The function of the channel may be either "Enabled" or "Disabled." If Disabled, there will not be an actual value created for the channel. An alphanumeric "ID" is assigned to the channel - this ID will be included in the display of the channel actual value. This ID is also used to reference the channel as the input parameter to features designed to measure this type of parameter. Selecting the type of RTD connected to the channel configures the channel.

5.9.1 TEST MODE

PATH: SETTINGS ⇨⇩ TESTING ⇨ TEST MODE

```
■■ SETTINGS
■■ TESTING
```

```
TEST MODE
FUNCTION: Disabled
```

Range: Disabled, Enabled

The relay provides test settings to verify that the relay is functional using simulated conditions to test all contact inputs and outputs. While the relay is in Test Mode (**TEST MODE FUNCTION:** "Enabled"), the feature being tested overrides normal functioning of the relay. During this time the Test Mode LED will remain on. Once out of Test Mode (**TEST MODE FUNCTION:** "Disabled"), the normal functioning of the relay will be restored.

5.9.2 FORCE CONTACT INPUTS

PATH: SETTINGS ⇨⇩ TESTING ⇨⇩ FORCE CONTACT INPUTS

```
■ FORCE CONTACT
■ INPUTS
```

```
FORCE Cont Ip 1
: Disabled
```

Range: Disabled, Open, Closed

MESSAGE

```
FORCE Cont Ip 2
: Disabled
```

Range: Disabled, Open, Closed

↓

MESSAGE

```
FORCE Cont Ip xx
: Disabled
```

Range: Disabled, Open, Closed

The Force Contact Inputs feature provides a method of performing checks on the function of all contact inputs. Once enabled, the relay is placed into Test Mode, allowing this feature to override the normal function of contact inputs. The Test Mode LED will be ON indicating that the relay is in test mode. The state of each contact input may be programmed as Disabled, Open, or Closed. All contact input operations return to normal when all settings for this feature are disabled.

5.9.3 FORCE CONTACT OUTPUTS

PATH: SETTINGS ⇨⇩ TESTING ⇨⇩ FORCE CONTACT OUTPUTS

```
■ FORCE CONTACT
■ OUTPUTS
```

```
FORCE Cont Op 1:
Disabled
```

Range: Disabled, Energized, De-energized, Freeze

MESSAGE

```
FORCE Cont Op 2:
Disabled
```

Range: Disabled, Energized, De-energized, Freeze

↓

MESSAGE

```
FORCE Cont Op xx:
Disabled
```

Range: Disabled, Energized, De-energized, Freeze

The Force Contact Output feature provides a method of performing checks on all contact outputs. Once enabled, the relay is placed into Test Mode, allowing this feature to override the normal contact outputs functions. The TEST MODE LED will be ON. The state of each contact output may be programmed as Disabled, Energized, De-energized, or Freeze. The Freeze option maintains the output contact in the state at which it was frozen. All contact output operations return to normal when all the settings for this feature are disabled.

6.1.1 ACTUAL VALUES MAIN MENU

■■ ACTUAL VALUES ■■ STATUS	■ CONTACT INPUTS ■	See page 6-3.
	■ VIRTUAL INPUTS ■	See page 6-3.
	■ REMOTE INPUTS ■	See page 6-3.
	■ CONTACT OUTPUTS ■	See page 6-4.
	■ VIRTUAL OUTPUTS ■	See page 6-4.
	■ AUTORECLOSE ■	See page 6-4.
	■ REMOTE DEVICES ■ STATUS	See page 6-4.
	■ REMOTE DEVICES ■ STATISTICS	See page 6-5.
	■ FLEX STATES ■	See page 6-5.
	■ ETHERNET ■	See page 6-5.
■■ ACTUAL VALUES ■■ METERING	■ SOURCE SRC 1 ■	See page 6-9.
	■ SOURCE SRC 2 ■	
	■ SOURCE SRC 3 ■	
	■ SOURCE SRC 4 ■	
	■ SOURCE SRC 5 ■	
	■ SOURCE SRC 6 ■	
	■ TRACKING FREQUENCY ■	See page 6-12.
	■ FLEXELEMENTS ■	See page 6-13.
	■ TRANSDUCER I/O ■ DCMA INPUTS	See page 6-13.
	■ TRANSDUCER I/O ■ RTD INPUTS	See page 6-13.

6

```
■■ ACTUAL VALUES
■■ RECORDS
```

```
■ EVENT RECORDS
■
```

See page 6-14.

```
■ OSCILLOGRAPHY
■
```

See page 6-14.

```
■ DATA LOGGER
■
```

See page 6-14.

```
■■ ACTUAL VALUES
■■ PRODUCT INFO
```

```
■ MODEL INFORMATION
■
```

See page 6-15.

```
■ FIRMWARE REVISIONS
■
```

See page 6-15.

For status reporting, 'On' represents Logic 1 and 'Off' represents Logic 0.

NOTE

6.2.1 CONTACT INPUTS

PATH: ACTUAL VALUES ⇨ STATUS ⇨ CONTACT INPUTS

```
■ CONTACT INPUTS        Cont Ip 1
■                       Off
                            ↓
MESSAGE                 Cont Ip xx
                        Off
```

The present status of the contact inputs is shown here. The first line of a message display indicates the ID of the contact input. For example, 'Cont Ip 1' refers to the contact input in terms of the default name-array index. The second line of the display indicates the logic state of the contact input.

6.2.2 VIRTUAL INPUTS

PATH: ACTUAL VALUES ⇨ STATUS ⇨⇩ VIRTUAL INPUTS

```
■ VIRTUAL INPUTS        Virt Ip 1
■                       Off
                            ↓
MESSAGE                 Virt Ip 32
                        Off
```

The present status of the 32 virtual inputs is shown here. The first line of a message display indicates the ID of the virtual input. For example, 'Virt Ip 1' refers to the virtual input in terms of the default name-array index. The second line of the display indicates the logic state of the virtual input.

6.2.3 REMOTE INPUTS

PATH: ACTUAL VALUES ⇨ STATUS ⇨⇩ REMOTE INPUTS

```
■ REMOTE INPUTS         REMOTE INPUT  1
■                       STATUS: Off
                            ↓
MESSAGE                 REMOTE INPUT 32
                        STATUS: Off
```

Range: On, Off

Range: On, Off

The present state of the 32 remote inputs is shown here.

The state displayed will be that of the remote point unless the remote device has been established to be "Offline" in which case the value shown is the programmed default state for the remote input.

6.2.4 CONTACT OUTPUTS

PATH: ACTUAL VALUES ⇨ STATUS ⇨⇩ CONTACT OUTPUTS

```
■ CONTACT OUTPUTS
■
```

```
Cont Op 1
Off
```

↓

MESSAGE

```
Cont Op xx
Off
```

The present state of the contact outputs is shown here.

The first line of a message display indicates the ID of the contact output. For example, ‘Cont Op 1’ refers to the contact output in terms of the default name-array index. The second line of the display indicates the logic state of the contact output.

NOTE **For Form-A outputs, the state of the voltage(V) and/or current(I) detectors will show as: Off, VOff, IOff, On, VOn, and/or IOn. For Form-C outputs, the state will show as Off or On.**

6.2.5 VIRTUAL OUTPUTS

PATH: ACTUAL VALUES ⇨ STATUS ⇨⇩ VIRTUAL OUTPUTS

```
■ VIRTUAL OUTPUTS
■
```

```
Virt Op 1
Off
```

↓

MESSAGE

```
Virt Op 64
Off
```

The present state of up to 64 virtual outputs is shown here. The first line of a message display indicates the ID of the virtual output. For example, ‘Virt Op 1’ refers to the virtual output in terms of the default name-array index. The second line of the display indicates the logic state of the virtual output, as calculated by the FlexLogic™ equation for that output.

6.2.6 AUTORECLOSE

PATH: ACTUAL VALUES ⇨ STATUS ⇨⇩ AUTORECLOSE ⇨ AUTORECLOSE 1

```
■ AUTORECLOSE 1
■
```

```
AUTORECLOSE 1
SHOT COUNT:     0
```

Range: 0, 1, 2, 3, 4

The automatic reclosure shot count is shown here.

6.2.7 REMOTE DEVICES STATUS

PATH: ACTUAL VALUES ⇨ STATUS ⇨⇩ REMOTE DEVICES STATUS

```
■ REMOTE DEVICES
■ STATUS
```

```
All REMOTE DEVICES
ONLINE: No
```

Range: Yes, No

MESSAGE

```
REMOTE DEVICE  1
STATUS: Offline
```

Range: Online, Offline

↓

MESSAGE

```
REMOTE DEVICE 16
STATUS: Offline
```

Range: Online, Offline

The present state of up to 16 programmed Remote Devices is shown here. The **ALL REMOTE DEVICES ONLINE** message indicates whether or not all programmed Remote Devices are online. If the corresponding state is "No", then at least one required Remote Device is not online.

6.2.8 REMOTE DEVICES STATISTICS

PATH: ACTUAL VALUES ⇨ STATUS ⇨⇩ REMOTE DEVICES STATISTICS ⇨ REMOTE DEVICE 1(16)

```
■ REMOTE DEVICE  1
■
```

```
REMOTE DEVICE  1
StNum:          0
```

MESSAGE

```
REMOTE DEVICE  1
SqNum:          0
```

Statistical data (2 types) for up to 16 programmed Remote Devices is shown here.

- The **StNum** number is obtained from the indicated Remote Device and is incremented whenever a change of state of at least one DNA or UserSt bit occurs.
- The **SqNum** number is obtained from the indicated Remote Device and is incremented whenever a GOOSE message is sent. This number will rollover to zero when a count of 4,294,967,295 is incremented.

6.2.9 FLEX STATES

PATH: ACTUAL VALUES ⇨ STATUS ⇨⇩ FLEX STATES

```
■ FLEX STATES
■
```

```
PARAM   1: Off
Off
```

Range: Off, On

↓

MESSAGE

```
PARAM 256: Off
Off
```

Range: Off, On

There are 256 FlexState bits available. The second line value indicates the state of the given FlexState bit.

6.2.10 ETHERNET

PATH: ACTUAL VALUES ⇨ STATUS ⇨⇩ ETHERNET

```
■ ETHERNET
■
```

```
ETHERNET PRI LINK
STATUS: OK
```

Range: Fail, OK

MESSAGE

```
ETHERNET SEC LINK
STATUS: OK
```

Range: Fail, OK

a) UR CONVENTION FOR MEASURING POWER AND ENERGY

The following figure illustrates the conventions established for use in UR relays.

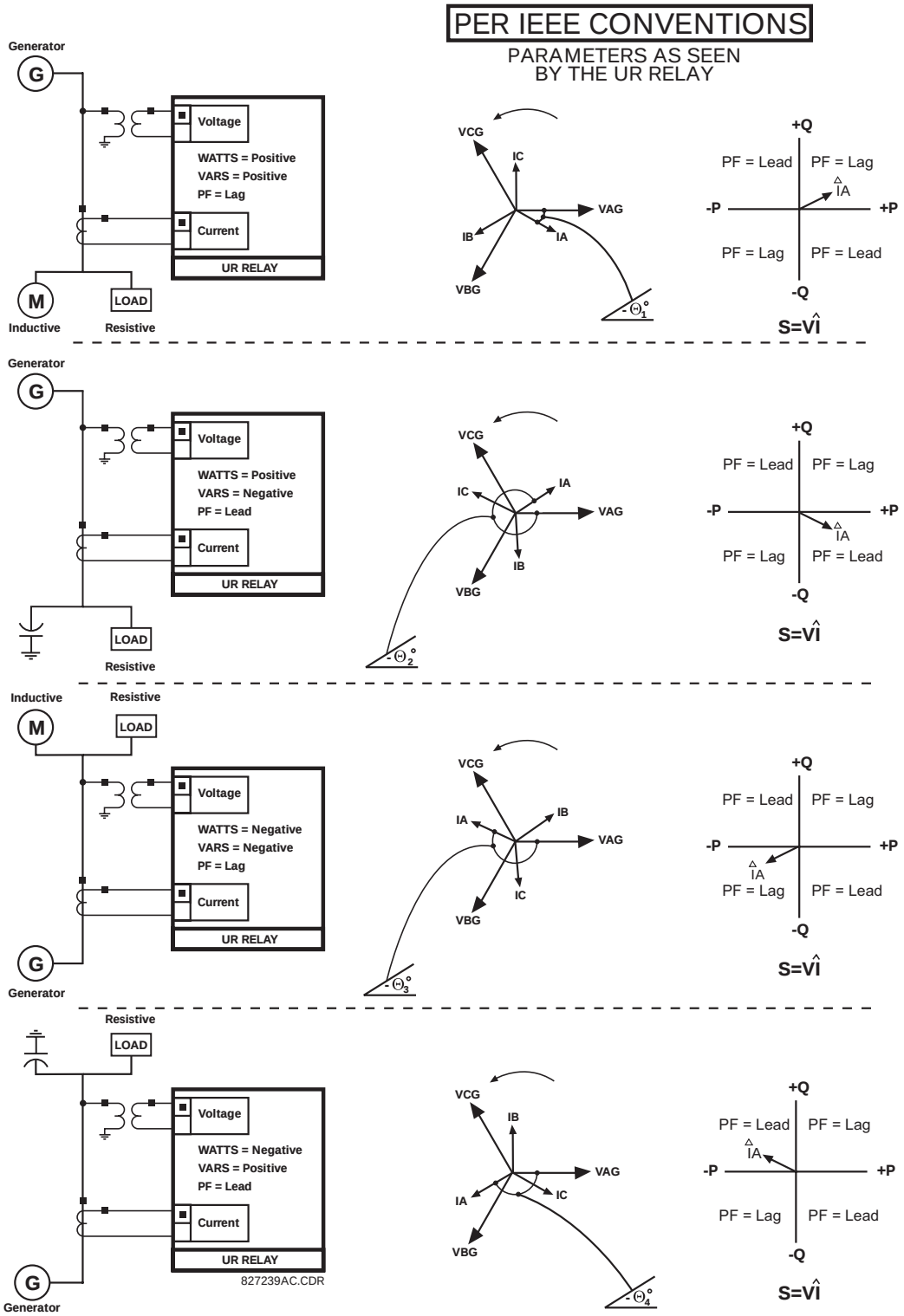

Figure 6–1: FLOW DIRECTION OF SIGNED VALUES FOR WATTS AND VARS

b) UR CONVENTION FOR MEASURING PHASE ANGLES

All phasors calculated by UR relays and used for protection, control and metering functions are rotating phasors that maintain the correct phase angle relationships with each other at all times.

For display and oscillography purposes, all phasor angles in a given relay are referred to an AC input channel pre-selected by the **SETTINGS ⇨⇩ SYSTEM SETUP ⇨⇩ POWER SYSTEM ⇨⇩ FREQUENCY AND PHASE REFERENCE** setting. This setting defines a particular Source to be used as the reference.

The relay will first determine if any "Phase VT" bank is indicated in the Source. If it is, voltage channel VA of that bank is used as the angle reference. Otherwise, the relay determines if any "Aux VT" bank is indicated; if it is, the auxiliary voltage channel of that bank is used as the angle reference. If neither of the two conditions is satisfied, then two more steps of this hierarchical procedure to determine the reference signal include "Phase CT" bank and "Ground CT" bank.

If the AC signal pre-selected by the relay upon configuration is not measurable, the phase angles are not referenced. The phase angles are assigned as positive in the leading direction, and are presented as negative in the lagging direction, to more closely align with power system metering conventions. This is illustrated below.

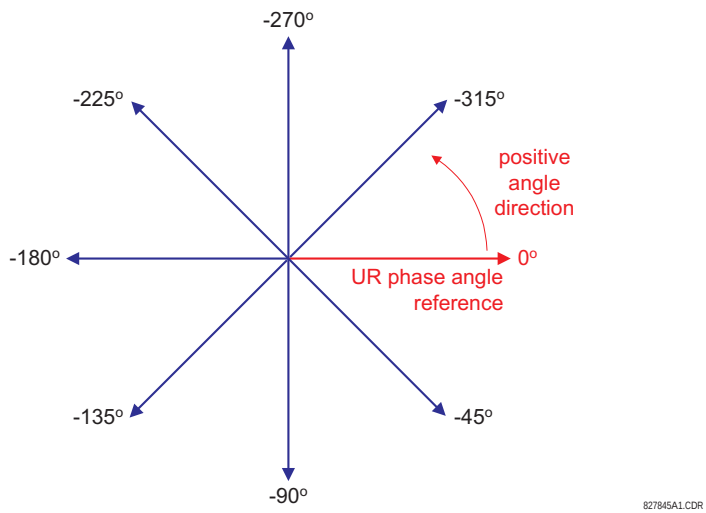

Figure 6–2: UR PHASE ANGLE MEASUREMENT CONVENTION

6.3.2 UR CONVENTION FOR MEASURING SYMMETRICAL COMPONENTS

UR relays calculate voltage symmetrical components for the power system phase A line-to-neutral voltage, and symmetrical components of the currents for the power system phase A current. Owing to the above definition, phase angle relations between the symmetrical currents and voltages stay the same irrespective of the connection of instrument transformers. This is important for setting directional protection elements that use symmetrical voltages.

For display and oscillography purposes the phase angles of symmetrical components are referenced to a common reference as described in the previous sub-section.

WYE-Connected Instrument Transformers:

- ABC phase rotation:

$$V\_0 = \frac{1}{3}(V_{AG} + V_{BG} + V_{CG})$$

$$V\_1 = \frac{1}{3}(V_{AG} + aV_{BG} + a^2 V_{CG})$$

$$V\_2 = \frac{1}{3}(V_{AG} + a^2 V_{BG} + aV_{CG})$$

- ACB phase rotation:

$$V\_0 = \frac{1}{3}(V_{AG} + V_{BG} + V_{CG})$$

$$V\_1 = \frac{1}{3}(V_{AG} + a^2 V_{BG} + aV_{CG})$$

$$V\_2 = \frac{1}{3}(V_{AG} + aV_{BG} + a^2 V_{CG})$$

The above equations apply to currents as well.

DELTA-Connected Instrument Transformers:

- ABC phase rotation:

$$V\_0 = N/A$$

$$V\_1 = \frac{1\angle -30°}{3\sqrt{3}}(V_{AB} + aV_{BC} + a^2V_{CA})$$

$$V\_2 = \frac{1\angle 30°}{3\sqrt{3}}(V_{AB} + a^2V_{BC} + aV_{CA})$$

- ACB phase rotation:

$$V\_0 = N/A$$

$$V\_1 = \frac{1\angle 30°}{3\sqrt{3}}(V_{AB} + a^2V_{BC} + aV_{CA})$$

$$V\_2 = \frac{1\angle -30°}{3\sqrt{3}}(V_{AB} + aV_{BC} + a^2V_{CA})$$

The zero-sequence voltage is not measurable under the DELTA connection of instrument transformers and is defaulted to zero. The table below shows an example of symmetrical components calculations for the ABC phase rotation.

Table 6–1: CALCULATING VOLTAGE SYMMETRICAL COMPONENTS EXAMPLE

SYSTEM VOLTAGES, SEC. V *						VT CONN.	UR INPUTS, SEC. V			SYMM. COMP, SEC. V		
V_{AG}	V_{BG}	V_{CG}	V_{AB}	V_{BC}	V_{CA}		F5AC	F6AC	F7AC	V_0	V_1	V_2
13.9 ∠0°	76.2 ∠–125°	79.7 ∠–250°	84.9 ∠–313°	138.3 ∠–97°	85.4 ∠–241°	WYE	13.9 ∠0°	76.2 ∠–125°	79.7 ∠–250°	19.5 ∠–192°	56.5 ∠–7°	23.3 ∠–187°
UNKNOWN (only V_1 and V_2 can be determined)			84.9 ∠0°	138.3 ∠–144°	85.4 ∠–288°	DELTA	84.9 ∠0°	138.3 ∠–144°	85.4 ∠–288°	N/A	56.5 ∠–54°	23.3 ∠–234°

* The power system voltages are phase-referenced – for simplicity – to *VAG* and *VAB*, respectively. This, however, is a relative matter. It is important to remember that the UR displays are always referenced as specified under **SETTINGS ⇨⇩ SYSTEM SETUP ⇨⇩ POWER SYSTEM ⇨⇩ FREQUENCY AND PHASE REFERENCE**.

The example above is illustrated in the following figure.

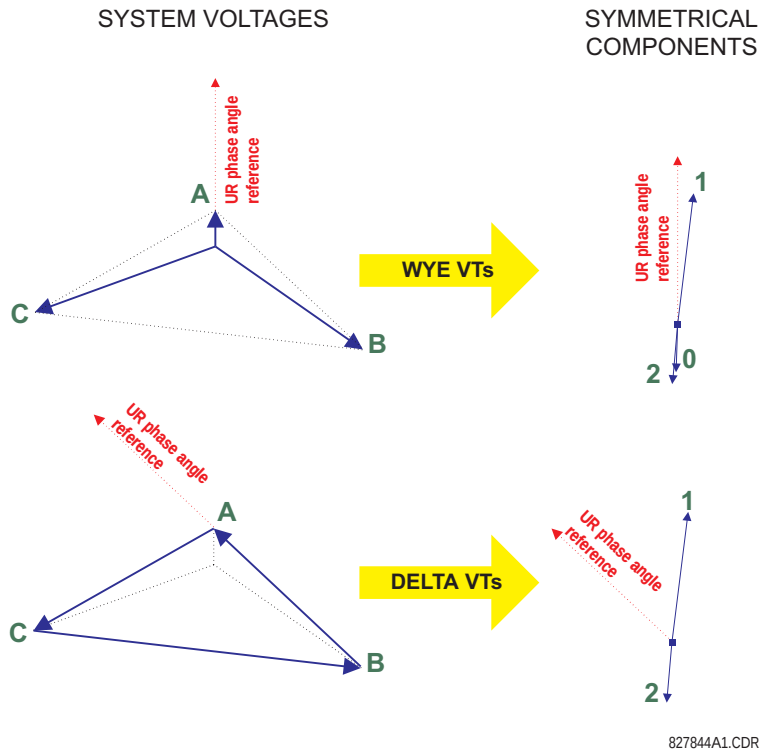

Figure 6–3: ILLUSTRATION OF THE UR CONVENTION FOR SYMMETRICAL COMPONENTS

6.3.3 SOURCES

PATH: ACTUAL VALUES ⇨⇩ METERING ⇨ SOURCE SRC 1 ⇨

NOTE **Because energy values are accumulated, these values should be recorded and then reset immediately prior to changing CT or VT characteristics.**

```
■ PHASE CURRENT
■ SRC 1
```

```
SRC 1 RMS Ia: 0.000
b: 0.000 c: 0.000  A
```

MESSAGE

```
SRC 1  RMS Ia:
 0.000  A
```

MESSAGE

```
SRC 1  RMS Ib:
 0.000  A
```

MESSAGE

```
SRC 1  RMS Ic:
 0.000  A
```

MESSAGE

```
SRC 1  RMS In:
 0.000  A
```

MESSAGE

```
SRC 1  PHASOR Ia:
 0.000  A       0.0°
```

MESSAGE

```
SRC 1  PHASOR Ib:
 0.000  A       0.0°
```

MESSAGE

```
SRC 1  PHASOR Ic:
 0.000  A       0.0°
```

MESSAGE

```
SRC 1  PHASOR In:
 0.000  A       0.0°
```

MESSAGE

```
SRC 1  ZERO SEQ I0:
 0.000  A       0.0°
```

MESSAGE

```
SRC 1  POS SEQ I1:
 0.000  A       0.0°
```

MESSAGE

```
SRC 1  NEG SEQ I2:
 0.000  A       0.0°
```

```
■ GROUND CURRENT
■ SRC 1
```

```
SRC 1  RMS Ig:
 0.000  A
```

MESSAGE

```
SRC 1  PHASOR Ig:
 0.000  A       0.0°
```

MESSAGE

```
SRC 1  PHASOR Igd:
 0.000  A       0.0°
```

```
■ PHASE VOLTAGE
■ SRC 1
```

```
SRC 1  RMS Vag:
 0.000  V
```

MESSAGE

```
SRC 1  RMS Vbg:
 0.000  V
```

MESSAGE

```
SRC 1  RMS Vcg:
 0.000  V
```

MESSAGE

```
SRC 1  PHASOR Vag:
 0.000  V       0.0°
```

```
MESSAGE   SRC 1  PHASOR Vbg:
           0.000  V       0.0°

MESSAGE   SRC 1  PHASOR Vcg:
           0.000  V       0.0°

MESSAGE   SRC 1  RMS Vab:
           0.000  V

MESSAGE   SRC 1  RMS Vbc:
           0.000  V

MESSAGE   SRC 1  RMS Vca:
           0.000  V

MESSAGE   SRC 1  PHASOR Vab:
           0.000  V       0.0°

MESSAGE   SRC 1  PHASOR Vbc:
           0.000  V       0.0°

MESSAGE   SRC 1  PHASOR Vca:
           0.000  V       0.0°

MESSAGE   SRC 1  ZERO SEQ V0:
           0.000  V       0.0°

MESSAGE   SRC 1  POS SEQ V1:
           0.000  V       0.0°

MESSAGE   SRC 1  NEG SEQ V2:
           0.000  V       0.0°

■ AUXILIARY VOLTAGE      SRC 1  RMS Vx:
■ SRC 1                   0.000  V

MESSAGE   SRC 1  PHASOR Vx:
           0.000  V       0.0°

■ POWER                  SRC 1  REAL POWER
■ SRC 1                  3ϕ:  0.000  W

MESSAGE   SRC 1  REAL POWER
          ϕa:  0.000  W

MESSAGE   SRC 1  REAL POWER
          ϕb:  0.000  W

MESSAGE   SRC 1  REAL POWER
          ϕc:  0.000  W

MESSAGE   SRC 1  REACTIVE PWR
          3ϕ:  0.000  var

MESSAGE   SRC 1  REACTIVE PWR
          ϕa:  0.000  var

MESSAGE   SRC 1  REACTIVE PWR
          ϕb:  0.000  var

MESSAGE   SRC 1  REACTIVE PWR
          ϕc:  0.000  var
```

```
MESSAGE   SRC 1  APPARENT PWR
          3ϕ:  0.000  VA

MESSAGE   SRC 1  APPARENT PWR
          ϕa:  0.000  VA

MESSAGE   SRC 1  APPARENT PWR
          ϕb:  0.000  VA

MESSAGE   SRC 1  APPARENT PWR
          ϕc:  0.000  VA

MESSAGE   SRC 1  POWER FACTOR
          3ϕ:      1.000

MESSAGE   SRC 1  POWER FACTOR
          ϕa:      1.000

MESSAGE   SRC 1  POWER FACTOR
          ϕb:      1.000

MESSAGE   SRC 1  POWER FACTOR
          ϕc:      1.000

■ ENERGY
■ SRC 1   SRC 1  POS WATTHOUR:
           0.000  Wh

MESSAGE   SRC 1  NEG WATTHOUR:
           0.000  Wh

MESSAGE   SRC 1  POS VARHOUR:
           0.000  varh

MESSAGE   SRC 1  NEG VARHOUR:
           0.000  varh

■ DEMAND
■ SRC 1   SRC 1  DMD IA:
           0.000  A

MESSAGE   SRC 1  DMD IA MAX:
           0.000  A

MESSAGE   SRC 1  DMD IA DATE:
          200/07/31 16:30:07

MESSAGE   SRC 1  DMD IB:
           0.000  A

MESSAGE   SRC 1  DMD IB MAX:
           0.000  A

MESSAGE   SRC 1  DMD IB DATE:
          200/07/31 16:30:07

MESSAGE   SRC 1  DMD IC:
           0.000  A

MESSAGE   SRC 1  DMD IC MAX:
           0.000  A

MESSAGE   SRC 1  DMD IC DATE:
          200/07/31 16:30:07
```

6

```
MESSAGE   SRC 1  DMD W:
           0.000  W

MESSAGE   SRC 1  DMD W MAX:
           0.000  W

MESSAGE   SRC 1  DMD W DATE:
          200/07/31 16:30:07

MESSAGE   SRC 1  DMD VAR:
           0.000  var

MESSAGE   SRC 1  DMD VAR MAX:
           0.000  var

MESSAGE   SRC 1  DMD VAR DATE:
          200/07/31 16:30:07

MESSAGE   SRC 1  DMD VA:
           0.000  VA

MESSAGE   SRC 1  DMD VA MAX:
           0.000  VA

MESSAGE   SRC 1  DMD VA DATE:
          200/07/31 16:30:07

■ FREQUENCY        SRC 1  FREQUENCY:
■ SRC 1             0.00 Hz
```

A maximum of 6 identical Source menus are available, numbered from SRC 1 to SRC 6. "SRC 1" will be replaced by whatever name was programmed by the user for the associated source (see **SETTINGS ⇨⇩ SYSTEM SETUP ⇨⇩ SIGNAL SOURCES**).

6

The relay measures (absolute values only) **SOURCE DEMAND** on each phase and average three phase demand for real, reactive, and apparent power. These parameters can be monitored to reduce supplier demand penalties or for statistical metering purposes. Demand calculations are based on the measurement type selected in the **SETTINGS ⇩ PRODUCT SETUP ⇨⇩ DEMAND** menu. For each quantity, the relay displays the demand over the most recent demand time interval, the maximum demand since the last maximum demand reset, and the time and date stamp of this maximum demand value. Maximum demand quantities can be reset to zero with the **COMMANDS ⇩ CLEAR RECORDS ⇨⇩ CLEAR DEMAND RECORDS** command.

SOURCE FREQUENCY is measured via software-implemented zero-crossing detection of an AC signal. The signal is either a Clarke transformation of three-phase voltages or currents, auxiliary voltage, or ground current as per source configuration (see **SETTINGS ⇨⇩ SYSTEM SETUP ⇨⇩ POWER SYSTEM**). The signal used for frequency estimation is low-pass filtered. The final frequency measurement is passed through a validation filter that eliminates false readings due to signal distortions and transients.

6.3.4 TRACKING FREQUENCY

PATH: ACTUAL VALUES ⇨⇩ METERING ⇨⇩ TRACKING FREQUENCY

```
■ TRACKING FREQUENCY      TRACKING FREQUENCY:
■                         60.00 Hz
```

The tracking frequency is displayed here. The frequency is tracked based on configuration of the reference source. See **SETTINGS ⇨⇩ SYSTEM SETUP ⇨⇩ POWER SYSTEM** for more details on frequency metering and tracking. With three-phase inputs configured the frequency is measured digitally using a Clarke combination of all three-phase signals for optimized performance during faults, open pole, and VT fuse fail conditions.

6.3.5 FLEXELEMENTS™

PATH: ACTUAL VALUES ⇨⇩ METERING ⇨⇩ FLEXELEMENTS ⇨ FLEXELEMENT 1(8)

```
■ FLEXELEMENT 1
■
```

```
FLEXELEMENT 1 OpSig:
0.000 pu
```

The operating signals for the FlexElements are displayed in pu values using the following definitions of the base units.

Table 6–2: FLEXELEMENT™ BASE UNITS

dcmA	BASE = maximum value of the **DCMA INPUT MAX** setting for the two transducers configured under the +IN and –IN inputs.
FREQUENCY	f_{BASE} = 1 Hz
PHASE ANGLE	φ_{BASE} = 360 degrees (see the UR angle referencing convention)
POWER FACTOR	PF_{BASE} = 1.00
RTDs	BASE = 100°C
SOURCE CURRENT	I_{BASE} = maximum nominal primary RMS value of the +IN and –IN inputs
SOURCE ENERGY (SRC X Positive Watthours) (SRC X Negative Watthours) (SRC X Positive Varhours) (SRC X Negative Varhours)	E_{BASE} = 10000 MWh or MVAh, respectively
SOURCE POWER	P_{BASE} = maximum value of $V_{BASE} \times I_{BASE}$ for the +IN and –IN inputs
SOURCE VOLTAGE	V_{BASE} = maximum nominal primary RMS value of the +IN and –IN inputs

6.3.6 TRANSDUCER I/O

a) DCMA INPUTS

PATH: ACTUAL VALUES ⇨⇩ METERING ⇨⇩ TRANSDUCER I/O DCMA INPUTS ⇨ DCMA INPUT xx

```
■ DCMA INPUT xx
■
```

```
DCMA INPUT xx
0.000 mA
```

Actual values for each DCMA input channel that is Enabled are displayed with the top line as the programmed channel "ID" and the bottom line as the value followed by the programmed units.

b) RTD INPUTS

PATH: ACTUAL VALUES ⇨⇩ METERING ⇨⇩ TRANSDUCER I/O RTD INPUTS ⇨ RTD INPUT xx

```
■ RTD INPUT xx
■
```

```
RTD INPUT xx
-50 °C
```

Actual values for each RTD input channel that is Enabled are displayed with the top line as the programmed channel "ID" and the bottom line as the value.

6.4.1 EVENT RECORDS

PATH: ACTUAL VALUES ⇨⇩ RECORDS ⇨⇩ EVENT RECORDS

```
■ EVENT RECORDS
■
```

```
EVENT: XXXX
RESET OP(PUSHBUTTON)
```

↓

MESSAGE

```
EVENT: 3
POWER ON
```

MESSAGE

```
EVENT: 2
POWER OFF
```

MESSAGE

```
EVENT: 1
EVENTS CLEARED
```

```
EVENT 3
DATE: 2000/07/14
```

```
EVENT 3
TIME: 14:53:00.03405
```

Date and Time Stamps

The Event Records menu shows the contextual data associated with up to the last 1024 events, listed in chronological order from most recent to oldest. If all 1024 event records have been filled, the oldest record will be removed as a new record is added. Each event record shows the event identifier/sequence number, cause, and date/time stamp associated with the event trigger. Refer to the COMMANDS CLEAR RECORDS menu for clearing event records.

6.4.2 OSCILLOGRAPHY

PATH: ACTUAL VALUES ⇨⇩ RECORDS ⇨⇩ OSCILLOGRAPHY

```
■ OSCILLOGRAPHY
■
```

```
FORCE TRIGGER?
No
```

Range: No, Yes

MESSAGE

```
NUMBER OF TRIGGERS:
    0
```

MESSAGE

```
AVAILABLE RECORDS:
    0
```

MESSAGE

```
CYCLES PER RECORD:
   0.0
```

MESSAGE

```
LAST CLEARED DATE:
2000/07/14 015:40:16
```

This menu allows the user to view the number of triggers involved and number of oscillography traces available. The ‘cycles per record’ value is calculated to account for the fixed amount of data storage for oscillography. See the OSCILLOGRAPHY section of Chapter 5.

A trigger can be forced here at any time by setting "Yes" to the **FORCE TRIGGER?** command. Refer to the **COMMANDS ⇨⇩ CLEAR RECORDS** menu for clearing the oscillography records.

6.4.3 DATA LOGGER

PATH: ACTUAL VALUES ⇨⇩ RECORDS ⇨⇩ DATA LOGGER

```
■ DATA LOGGER
■
```

```
OLDEST SAMPLE TIME:
2000/01/14 13:45:51
```

MESSAGE

```
NEWEST SAMPLE TIME:
2000/01/14 15:21:19
```

The **OLDEST SAMPLE TIME** is the time at which the oldest available samples were taken. It will be static until the log gets full, at which time it will start counting at the defined sampling rate. The **NEWEST SAMPLE TIME** is the time the most recent samples were taken. It counts up at the defined sampling rate. If Data Logger channels are defined, then both values are static.

Refer to the **COMMANDS ⇨⇩ CLEAR RECORDS** menu for clearing data logger records.

6.5.1 MODEL INFORMATION

PATH: ACTUAL VALUES ⇨⇩ PRODUCT INFO ⇨ MODEL INFORMATION

```
■ MODEL INFORMATION
■
```

```
ORDER CODE LINE 1:
F35-A00-HCH-F8C-H6G
```

Example code shown

MESSAGE

```
ORDER CODE LINE 2:
```

MESSAGE

```
ORDER CODE LINE 3:
```

MESSAGE

```
ORDER CODE LINE 4:
```

MESSAGE

```
SERIAL NUMBER:
```

MESSAGE

```
ETHERNET MAC ADDRESS
000000000000
```

MESSAGE

```
MANUFACTURING DATE:
0
```

Range: YYYY/MM/DD HH:MM:SS

MESSAGE

```
OPERATING TIME:
      0:00:00
```

The product order code, serial number, Ethernet MAC address, date/time of manufacture, and operating time are shown here.

6.5.2 FIRMWARE REVISIONS

PATH: ACTUAL VALUES ⇨⇩ PRODUCT INFO ⇨⇩ FIRMWARE REVISIONS

```
■ FIRMWARE REVISIONS
■
```

```
F35 Feeder Relay
REVISION:   2.9X
```

Range: 0.00 to 655.35
Revision number of the application firmware.

MESSAGE

```
MODIFICATION FILE
NUMBER:     0
```

Range: 0 to 65535 (ID of the MOD FILE)
Value is 0 for each standard firmware release.

MESSAGE

```
BOOT PROGRAM
REVISION:   1.12
```

Range: 0.00 to 655.35
Revision number of the boot program firmware.

MESSAGE

```
FRONT PANEL PROGRAM
REVISION:   0.08
```

Range: 0.00 to 655.35
Revision number of faceplate program firmware.

MESSAGE

```
COMPILE DATE:
2000/09/08 04:55:16
```

Range: Any valid date and time.
Date and time when product firmware was built.

MESSAGE

```
BOOT DATE:
2000/05/11 16:41:32
```

Range: Any valid date and time.
Date and time when the boot program was built.

The shown data is illustrative only. A modification file number of 0 indicates that, currently, no modifications have been installed.

7.1.1 COMMANDS MENU

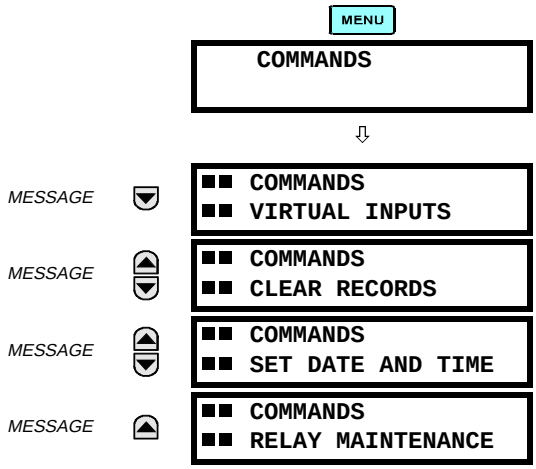

The COMMANDS menu contains relay directives intended for operations personnel. All commands can be protected from unauthorized access via the Command Password; see the PASSWORD SECURITY menu description in the PRODUCT SETUP section of Chapter 5. The following flash message appears after successfully command entry:

```
COMMAND
EXECUTED
```

7.1.2 VIRTUAL INPUTS

PATH: COMMANDS ⇩ COMMANDS VIRTUAL INPUTS

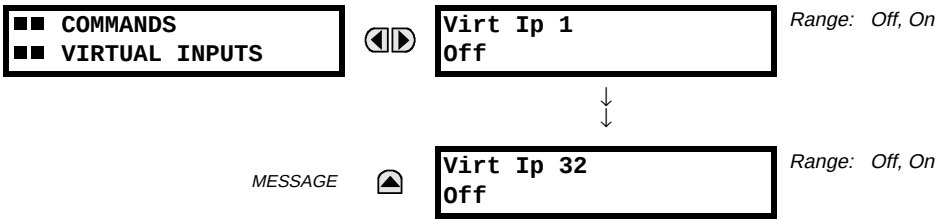

The states of up to 32 virtual inputs are changed here. The first line of the display indicates the ID of the virtual input. The second line indicates the current or selected status of the virtual input. This status will be a logical state ‘Off’ (0) or ‘On’ (1).

7.1.3 CLEAR RECORDS

PATH: COMMANDS ⇩ COMMANDS CLEAR RECORDS

```
■■ COMMANDS
■■ CLEAR RECORDS
```

```
CLEAR EVENT RECORDS?
No
```
Range: No, Yes

```
CLEAR OSCILLOGRAPHY?
No
```
Range: No, Yes

```
CLEAR DATA LOGGER?
No
```
Range: No, Yes

```
CLEAR DEMAND
RECORDS?: No
```
Range: No, Yes

```
CLEAR ENERGY?
No
```
Range: No, Yes

This menu contains commands for clearing historical data such as the Event Records. Data is cleard by changing a command setting to "Yes" and pressing the ENTER key. After clearing data, the command setting automatically reverts to "No".

7.1.4 SET DATE AND TIME

PATH: COMMANDS ⇩ SET DATE AND TIME

```
■■ COMMANDS
■■ SET DATE AND TIME
```

```
SET DATE AND TIME:
2000/01/14 13:47:03
```
(YYYY/MM/DD HH:MM:SS)

The date and time can be entered here via the faceplate keypad, provided that the IRIG-B signal is not being used. The time setting is based on the 24-hour clock. The complete date, as a minimum, must be entered to allow execution of this command. The new time will take effect at the moment the ENTER key is clicked.

7.1.5 RELAY MAINTENANCE

PATH: COMMANDS ⇩ RELAY MAINTENANCE

```
■■ COMMANDS
■■ RELAY MAINTENANCE
```

```
PERFORM LAMPTEST?
No
```
Range: No, Yes

```
UPDATE ORDER CODE?
No
```
Range: No, Yes

This menu contains commands for relay maintenance purposes. Commands are activated by changing a command setting to "Yes" and pressing the ENTER key. The command setting will then automatically revert to "No".

The **PERFORM LAMPTEST** command turns on all faceplate LEDs and display pixels for a short duration. The **UPDATE ORDER CODE** command causes the relay to scan the backplane for the hardware modules and update the order code to match. If an update occurs, the following message is shown.

```
UPDATING...
PLEASE WAIT
```

There is no impact if there have been no changes to the hardware modules. When an update does not occur, the following message will be shown.

```
ORDER CODE
NOT UPDATED
```

7.2.1 TARGETS MENU

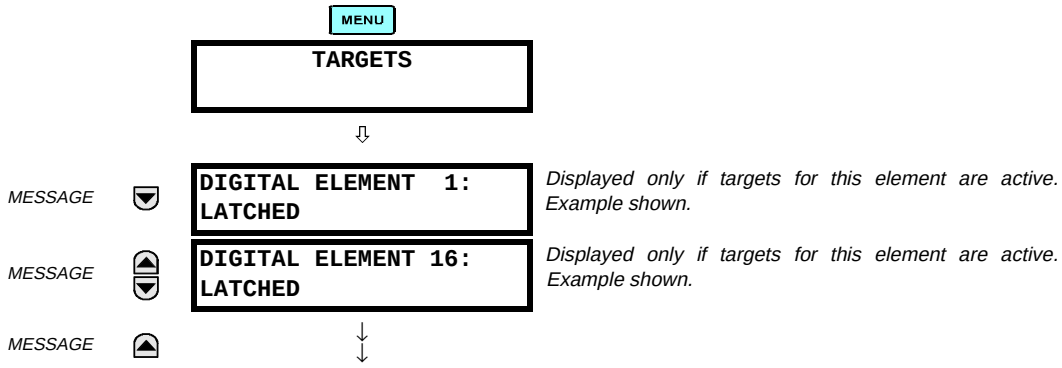

The status of any active targets will be displayed in the TARGETS menu. If no targets are active, the display will read:

```
No Active
Targets
```

7.2.2 TARGET MESSAGES

When there are no active targets, the first target to become active will cause the display to immediately default to that message. If there are active targets and the user is navigating through other messages, and when the default message timer times out (i.e. the keypad has not been used for a determined period of time), the display will again default back to the target message.

The range of variables for the target messages is described below. Phase information will be included if applicable. If a target message status changes, the status with the highest priority will be displayed.

Table 7–1: TARGET MESSAGE PRIORITY STATUS

PRIORITY	ACTIVE STATUS	DESCRIPTION
1	OP	element operated and still picked up
2	PKP	element picked up and timed out
3	LATCHED	element had operated but has dropped out

If a self test error is detected, a message appears indicating the cause of the error. For example:

```
UNIT NOT PROGRAMMED
:Self Test Error
```

7.2.3 RELAY SELF-TESTS

The relay performs a number of self-test diagnostic checks to ensure device integrity. The two types of self-tests (major and minor) are listed in the tables below. When either type of self-test error occurs, the TROUBLE indicator will turn on and a target message displayed. All errors record an event in the event recorder. Latched errors can be cleared by pressing the RESET key, providing the condition is no longer present.

Major self-test errors also result in the following:

- the critical fail relay on the power supply module is de-energized
- all other output relays are de-energized and are prevented from further operation
- the faceplate IN SERVICE indicator is turned off
- a RELAY OUT OF SERVICE event is recorded

Table 7–2: MAJOR SELF-TEST ERROR MESSAGES

SELF-TEST ERROR MESSAGE	LATCHED TARGET MSG?	DESCRIPTION OF PROBLEM	HOW OFTEN THE TEST IS PERFORMED	WHAT TO DO
UNIT NOT PROGRAMMED	No	**PRODUCT SETUP** ⇨⇩ **INSTALLATION** setting indicates relay is not in a programmed state.	On power up and whenever the **RELAY PROGRAMMED** setting is altered.	Program all settings (especially those under **PRODUCT SETUP** ⇨⇩ **INSTALLATION**).
EQUIPMENT MISMATCH with 2nd-line detail message	No	Configuration of modules does not match the order code stored in the CPU.	On power up; thereafter, the backplane is checked for missing cards every 5 seconds.	Check all module types against the order code, ensure they are inserted properly, and cycle control power (if problem persists, contact the factory).
UNIT NOT CALIBRATED	No	Settings indicate the unit is not calibrated.	On power up.	Contact the factory.
FLEXLOGIC ERR TOKEN with 2nd-line detail message	No	FlexLogic equations do not compile properly.	Event driven; whenever Flex-Logic equations are modified.	Finish all equation editing and use self test to debug any errors.
DSP ERRORS: A/D RESET FAILURE A/D CAL FAILURE A/D INT. MISSING A/D VOLT REF. FAIL NO DSP INTERRUPTS DSP CHECKSUM FAILED DSP FAILED	Yes	CT/VT module with digital signal processor may have a problem.	Every 1/8th of a cycle.	Cycle the control power (if the problem recurs, contact the factory).
PROGRAM MEMORY Test Failed	Yes	Error was found while checking Flash memory.	Once flash is uploaded with new firmware.	Contact the factory.

Table 7–3: MINOR SELF-TEST ERROR MESSAGES

SELF-TEST ERROR MESSAGE	LATCHED TARGET MSG?	DESCRIPTION OF PROBLEM	HOW OFTEN THE TEST IS PERFORMED	WHAT TO DO
EEPROM CORRUPTED	Yes	The non-volatile memory has been corrupted.	On power up only.	Contact the factory.
IRIG-B FAILURE	No	Bad IRIG-B input signal.	Monitored whenever an IRIG-B signal is received.	• Ensure the IRIG-B cable is connected to the relay. • Check functionality of the cable (i.e. look for physical damage or perform a continuity test). • Ensure the IRIG-B receiver is functioning properly. • Check the input signal level; it may be lower than specification. If none of the above items apply, contact the factory.
PRIM ETHERNET FAIL	No	Primary Ethernet connection failed	Monitored every 2 seconds	Check connections.
SEC ETHERNET FAIL	No	Secondary Ethernet connection failed	Monitored every 2 seconds	Check connections.
BATTERY FAIL	No	Battery is not functioning.	Monitored every 5 seconds. Reported after 1 minute if problem persists.	Replace the battery.
PROTOTYPE FIRMWARE	Yes	A prototype version of the firmware is loaded.	On power up only.	Contact the factory.
SYSTEM EXCEPTION or ABNORMAL RESTART	Yes	Abnormal restart due to modules being removed/inserted when powered-up, abnormal DC supply, or internal relay failure.	Event driven.	Contact the factory.
LOW ON MEMORY	Yes	Memory is close to 100% capacity	Monitored every 5 seconds.	Contact the factory.
WATCHDOG ERROR	No	Some tasks are behind schedule	Event driven.	Contact the factory.
REMOTE DEVICE OFFLINE	Yes	One or more GOOSE devices are not responding	Event driven. Occurs when a device programmed to receive GOOSE messages stops receiving message. Time is 1 to 60 sec. depending on GOOSE protocol packets.	Check GOOSE setup

The following tables are provided to keep a record of settings to be used on a relay.

8.1.1 SETTINGS

Table 8–1: PRODUCT SETUP (Sheet 1 of 14)

SETTING	VALUE
PASSWORD SECURITY	
Access Level	
Command Password	
Setting Password	
Encrypted Command Password	
Encrypted Setting Password	
DISPLAY PROPERTIES	
Flash Message Time	
Default Message Timeout	
Default Message Intensity	
REAL TIME CLOCK	
IRIG-B Signal Type	
COMMUNICATIONS > SERIAL PORTS	
RS485 COM1 Baud Rate	
RS485 COM1 Parity	
RS485 COM2 Baud Rate	
RS485 COM2 Parity	
COMMUNICATIONS > NETWORK	
IP Address	
Subnet IP Mask	
Gateway IP Address	
OSI Network Address (NSAP)	
Ethernet Operation Mode	
Ethernet Primary Link Monitor	
Ethernet Secondary Link Monitor	
COMMUNICATIONS > MODBUS PROTOCOL	
Modbus Slave Address	
Modbus TCP Port Number	
COMMUNICATIONS > DNP PROTOCOL	
DNP Port	
DNP Address	
DNP Network Client Address 1	
DNP Network Client Address 2	
DNP TCP/UDP Port Number	
DNP Unsol Response Function	
DNP Unsol Response Timeout	
DNP Unsol Response Max Retries	
Unsol Response Dest Address	
User Map for DNP Analogs	
Number of Sources in Analog List	

Table 8–1: PRODUCT SETUP (Sheet 2 of 14)

SETTING	VALUE
DNP Current Scale Factor	
DNP Voltage Scale Factor	
DNP Power Scale Factor	
DNP Energy Scale Factor	
DNP Other Scale Factor	
DNP Current Default Deadband	
DNP Voltage Default Deadband	
DNP Power Default Deadband	
DNP Energy Default Deadband	
DNP Other Default Deadband	
DNP Time Sync In IIN Period	
DNP Message Fragment Size	
COMMUNICATIONS > UCA/MMS PROTOCOL	
Default GOOSE Update Time	
UCA Logical Device	
UCA/MMS TCP Port Number	
COMMUNICATIONS > WEB SERVER HTTP PROT.	
HTTP TCP Port Number	
COMMUNICATIONS > TFTP PROTOCOL	
TFTP Main UDP Port Number	
TFTP Data UDP Port 1 Number	
TFTP Data UDP Port 2 Number	
COMMUNICATIONS > IEC 60870-5-104 PROTOCOL	
IEC 60870-5-104 Function	
IEC TCP Port Number	
IEC Common Address of ASDU	
IEC Cyclic Data Period	
Number of Sources in MMENC1 List	
IEC Current Default Threshold	
IEC Voltage Default Threshold	
IEC Power Default Threshold	
IEC Energy Default Threshold	
IEC Other Default Threshold	
OSCILLOGRAPHY	
Number of Records	
Trigger Mode	
Trigger Position	
Trigger Source	
AC Input Waveforms	

Table 8–1: PRODUCT SETUP (Sheet 3 of 14)

SETTING	VALUE
OSCILLOGRAPHY > DIGITAL CHANNELS	
Digital Channel 1	
Digital Channel 2	
Digital Channel 3	
Digital Channel 4	
Digital Channel 5	
Digital Channel 6	
Digital Channel 7	
Digital Channel 8	
Digital Channel 9	
Digital Channel 10	
Digital Channel 11	
Digital Channel 12	
Digital Channel 13	
Digital Channel 14	
Digital Channel 15	
Digital Channel 16	
Digital Channel 17	
Digital Channel 18	
Digital Channel 19	
Digital Channel 20	
Digital Channel 21	
Digital Channel 22	
Digital Channel 23	
Digital Channel 24	
Digital Channel 25	
Digital Channel 26	
Digital Channel 27	
Digital Channel 28	
Digital Channel 29	
Digital Channel 30	
Digital Channel 31	
Digital Channel 32	
Digital Channel 33	
Digital Channel 34	
Digital Channel 35	
Digital Channel 36	
Digital Channel 37	
Digital Channel 38	
Digital Channel 39	
Digital Channel 40	
Digital Channel 41	
Digital Channel 42	
Digital Channel 43	
Digital Channel 44	
Digital Channel 45	
Digital Channel 46	

Table 8–1: PRODUCT SETUP (Sheet 4 of 14)

SETTING	VALUE
Digital Channel 47	
Digital Channel 48	
Digital Channel 49	
Digital Channel 50	
Digital Channel 51	
Digital Channel 52	
Digital Channel 53	
Digital Channel 54	
Digital Channel 55	
Digital Channel 56	
Digital Channel 57	
Digital Channel 58	
Digital Channel 59	
Digital Channel 60	
Digital Channel 61	
Digital Channel 62	
Digital Channel 63	
Digital Channel 64	
OSCILLOGRAPHY > ANALOG CHANNELS	
Analog Channel 1	
Analog Channel 2	
Analog Channel 3	
Analog Channel 4	
Analog Channel 5	
Analog Channel 6	
Analog Channel 7	
Analog Channel 8	
Analog Channel 9	
Analog Channel 10	
Analog Channel 11	
Analog Channel 12	
Analog Channel 13	
Analog Channel 14	
Analog Channel 15	
Analog Channel 16	
DATA LOGGER	
Rate	
Channel 1	
Channel 2	
Channel 3	
Channel 4	
Channel 5	
Channel 6	
Channel 7	
Channel 8	
Channel 9	
Channel 10	

Table 8–1: PRODUCT SETUP (Sheet 5 of 14)

SETTING	VALUE
Channel 11	
Channel 12	
Channel 13	
Channel 14	
Channel 15	
Channel 16	
DEMAND	
Current Demand Method	
Power Demand Method	
Demand Interval	
Demand Trigger	
USER PROGRAMMABLE LEDS	
Trip LED Input	
Alarm LED Input	
LED 1 Operand	
LED 1 Type	
LED 2 Operand	
LED 2 Type	
LED 3 Operand	
LED 3 Type	
LED 4 Operand	
LED 4 Type	
LED 5 Operand	
LED 5 Type	
LED 6 Operand	
LED 6 Type	
LED 7 Operand	
LED 7 Type	
LED 8 Operand	
LED 8 Type	
LED 9 Operand	
LED 9 Type	
LED 10 Operand	
LED 10 Type	
LED 11 Operand	
LED 11 Type	
LED 12 Operand	
LED 12 Type	
LED 13 Operand	
LED 13 Type	
LED 14 Operand	
LED 14 Type	
LED 15 Operand	
LED 15 Type	
LED 16 Operand	
LED 16 Type	
LED 17 Operand	

Table 8–1: PRODUCT SETUP (Sheet 6 of 14)

SETTING	VALUE
LED 17 Type	
LED 18 Operand	
LED 18 Type	
LED 19 Operand	
LED 19 Type	
LED 20 Operand	
LED 20 Type	
LED 21 Operand	
LED 21 Type	
LED 22 Operand	
LED 22 Type	
LED 23 Operand	
LED 23 Type	
LED 24 Operand	
LED 24 Type	
LED 25 Operand	
LED 25 Type	
LED 26 Operand	
LED 26 Type	
LED 27 Operand	
LED 27 Type	
LED 28 Operand	
LED 28 Type	
LED 29 Operand	
LED 29 Type	
LED 30 Operand	
LED 30 Type	
LED 31 Operand	
LED 31 Type	
LED 32 Operand	
LED 32 Type	
LED 33 Operand	
LED 33 Type	
LED 34 Operand	
LED 34 Type	
LED 35 Operand	
LED 35 Type	
LED 36 Operand	
LED 36 Type	
LED 37 Operand	
LED 37 Type	
LED 38 Operand	
LED 38 Type	
LED 39 Operand	
LED 39 Type	
LED 40 Operand	
LED 40 Type	

Table 8–1: PRODUCT SETUP (Sheet 7 of 14)

SETTING	VALUE
LED 41 Operand	
LED 41 Type	
LED 42 Operand	
LED 42 Type	
LED 43 Operand	
LED 43 Type	
LED 44 Operand	
LED 44 Type	
LED 45 Operand	
LED 45 Type	
LED 46 Operand	
LED 46 Type	
LED 47 Operand	
LED 47 Type	
LED 48 Operand	
LED 48 Type	
FLEX STATE PARAMETERS	
Flex State Parameter 1	
Flex State Parameter 2	
Flex State Parameter 3	
Flex State Parameter 4	
Flex State Parameter 5	
Flex State Parameter 6	
Flex State Parameter 7	
Flex State Parameter 8	
Flex State Parameter 9	
Flex State Parameter 10	
Flex State Parameter 11	
Flex State Parameter 12	
Flex State Parameter 13	
Flex State Parameter 14	
Flex State Parameter 15	
Flex State Parameter 16	
Flex State Parameter 17	
Flex State Parameter 18	
Flex State Parameter 19	
Flex State Parameter 20	
Flex State Parameter 21	
Flex State Parameter 22	
Flex State Parameter 23	
Flex State Parameter 24	
Flex State Parameter 25	
Flex State Parameter 26	
Flex State Parameter 27	
Flex State Parameter 28	
Flex State Parameter 29	
Flex State Parameter 30	

Table 8–1: PRODUCT SETUP (Sheet 8 of 14)

SETTING	VALUE
Flex State Parameter 31	
Flex State Parameter 32	
Flex State Parameter 33	
Flex State Parameter 34	
Flex State Parameter 35	
Flex State Parameter 36	
Flex State Parameter 37	
Flex State Parameter 38	
Flex State Parameter 39	
Flex State Parameter 40	
Flex State Parameter 41	
Flex State Parameter 42	
Flex State Parameter 43	
Flex State Parameter 44	
Flex State Parameter 45	
Flex State Parameter 46	
Flex State Parameter 47	
Flex State Parameter 48	
Flex State Parameter 49	
Flex State Parameter 50	
Flex State Parameter 51	
Flex State Parameter 52	
Flex State Parameter 53	
Flex State Parameter 54	
Flex State Parameter 55	
Flex State Parameter 56	
Flex State Parameter 57	
Flex State Parameter 58	
Flex State Parameter 59	
Flex State Parameter 60	
Flex State Parameter 61	
Flex State Parameter 62	
Flex State Parameter 63	
Flex State Parameter 64	
Flex State Parameter 65	
Flex State Parameter 66	
Flex State Parameter 67	
Flex State Parameter 68	
Flex State Parameter 69	
Flex State Parameter 70	
Flex State Parameter 71	
Flex State Parameter 72	
Flex State Parameter 73	
Flex State Parameter 74	
Flex State Parameter 75	
Flex State Parameter 76	
Flex State Parameter 77	

Table 8–1: PRODUCT SETUP (Sheet 9 of 14)

SETTING	VALUE
Flex State Parameter 78	
Flex State Parameter 79	
Flex State Parameter 80	
Flex State Parameter 81	
Flex State Parameter 82	
Flex State Parameter 83	
Flex State Parameter 84	
Flex State Parameter 85	
Flex State Parameter 86	
Flex State Parameter 87	
Flex State Parameter 88	
Flex State Parameter 89	
Flex State Parameter 90	
Flex State Parameter 91	
Flex State Parameter 92	
Flex State Parameter 93	
Flex State Parameter 94	
Flex State Parameter 95	
Flex State Parameter 96	
Flex State Parameter 97	
Flex State Parameter 98	
Flex State Parameter 99	
Flex State Parameter 100	
Flex State Parameter 101	
Flex State Parameter 102	
Flex State Parameter 103	
Flex State Parameter 104	
Flex State Parameter 105	
Flex State Parameter 106	
Flex State Parameter 107	
Flex State Parameter 108	
Flex State Parameter 109	
Flex State Parameter 110	
Flex State Parameter 111	
Flex State Parameter 112	
Flex State Parameter 113	
Flex State Parameter 114	
Flex State Parameter 115	
Flex State Parameter 116	
Flex State Parameter 117	
Flex State Parameter 118	
Flex State Parameter 119	
Flex State Parameter 120	
Flex State Parameter 121	
Flex State Parameter 122	
Flex State Parameter 123	
Flex State Parameter 124	

Table 8–1: PRODUCT SETUP (Sheet 10 of 14)

SETTING	VALUE
Flex State Parameter 125	
Flex State Parameter 126	
Flex State Parameter 127	
Flex State Parameter 128	
Flex State Parameter 129	
Flex State Parameter 130	
Flex State Parameter 131	
Flex State Parameter 132	
Flex State Parameter 133	
Flex State Parameter 134	
Flex State Parameter 135	
Flex State Parameter 136	
Flex State Parameter 137	
Flex State Parameter 138	
Flex State Parameter 139	
Flex State Parameter 140	
Flex State Parameter 141	
Flex State Parameter 142	
Flex State Parameter 143	
Flex State Parameter 144	
Flex State Parameter 145	
Flex State Parameter 146	
Flex State Parameter 147	
Flex State Parameter 148	
Flex State Parameter 149	
Flex State Parameter 150	
Flex State Parameter 151	
Flex State Parameter 152	
Flex State Parameter 153	
Flex State Parameter 154	
Flex State Parameter 155	
Flex State Parameter 156	
Flex State Parameter 157	
Flex State Parameter 158	
Flex State Parameter 159	
Flex State Parameter 160	
Flex State Parameter 161	
Flex State Parameter 162	
Flex State Parameter 163	
Flex State Parameter 164	
Flex State Parameter 165	
Flex State Parameter 166	
Flex State Parameter 167	
Flex State Parameter 168	
Flex State Parameter 169	
Flex State Parameter 170	
Flex State Parameter 171	

Table 8–1: PRODUCT SETUP (Sheet 11 of 14)

SETTING	VALUE
Flex State Parameter 172	
Flex State Parameter 173	
Flex State Parameter 174	
Flex State Parameter 175	
Flex State Parameter 176	
Flex State Parameter 177	
Flex State Parameter 178	
Flex State Parameter 179	
Flex State Parameter 180	
Flex State Parameter 181	
Flex State Parameter 182	
Flex State Parameter 183	
Flex State Parameter 184	
Flex State Parameter 185	
Flex State Parameter 186	
Flex State Parameter 187	
Flex State Parameter 188	
Flex State Parameter 189	
Flex State Parameter 190	
Flex State Parameter 191	
Flex State Parameter 192	
Flex State Parameter 193	
Flex State Parameter 194	
Flex State Parameter 195	
Flex State Parameter 196	
Flex State Parameter 197	
Flex State Parameter 198	
Flex State Parameter 199	
Flex State Parameter 200	
Flex State Parameter 201	
Flex State Parameter 202	
Flex State Parameter 203	
Flex State Parameter 204	
Flex State Parameter 205	
Flex State Parameter 206	
Flex State Parameter 207	
Flex State Parameter 208	
Flex State Parameter 209	
Flex State Parameter 210	
Flex State Parameter 211	
Flex State Parameter 212	
Flex State Parameter 213	
Flex State Parameter 214	
Flex State Parameter 215	
Flex State Parameter 216	
Flex State Parameter 217	
Flex State Parameter 218	

Table 8–1: PRODUCT SETUP (Sheet 12 of 14)

SETTING	VALUE
Flex State Parameter 219	
Flex State Parameter 220	
Flex State Parameter 221	
Flex State Parameter 222	
Flex State Parameter 223	
Flex State Parameter 224	
Flex State Parameter 225	
Flex State Parameter 226	
Flex State Parameter 227	
Flex State Parameter 228	
Flex State Parameter 229	
Flex State Parameter 230	
Flex State Parameter 231	
Flex State Parameter 232	
Flex State Parameter 233	
Flex State Parameter 234	
Flex State Parameter 235	
Flex State Parameter 236	
Flex State Parameter 237	
Flex State Parameter 238	
Flex State Parameter 239	
Flex State Parameter 240	
Flex State Parameter 241	
Flex State Parameter 242	
Flex State Parameter 243	
Flex State Parameter 244	
Flex State Parameter 245	
Flex State Parameter 246	
Flex State Parameter 247	
Flex State Parameter 248	
Flex State Parameter 249	
Flex State Parameter 250	
Flex State Parameter 251	
Flex State Parameter 252	
Flex State Parameter 253	
Flex State Parameter 254	
Flex State Parameter 255	
Flex State Parameter 256	
USER DISPLAY 1	
Disp 1 Top Line	
Disp 1 Bottom Line	
Disp 1 Item 1	
Disp 1 Item 2	
Disp 1 Item 3	
Disp 1 Item 4	
Disp 1 Item 5	

Table 8–1: PRODUCT SETUP (Sheet 13 of 14)

SETTING	VALUE
USER DISPLAY 2	
Disp 2 Top Line	
Disp 2 Bottom Line	
Disp 2 Item 1	
Disp 2 Item 2	
Disp 2 Item 3	
Disp 2 Item 4	
Disp 2 Item 5	
USER DISPLAY 3	
Disp 3 Top Line	
Disp 3 Bottom Line	
Disp 3 Item 1	
Disp 3 Item 2	
Disp 3 Item 3	
Disp 3 Item 4	
Disp 3 Item 5	
USER DISPLAY 4	
Disp 4 Top Line	
Disp 4 Bottom Line	
Disp 4 Item 1	
Disp 4 Item 2	
Disp 4 Item 3	
Disp 4 Item 4	
Disp 4 Item 5	
USER DISPLAY 5	
Disp 5 Top Line	
Disp 5 Bottom Line	
Disp 5 Item 1	
Disp 5 Item 2	
Disp 5 Item 3	
Disp 5 Item 4	
Disp 5 Item 5	
USER DISPLAY 6	
Disp 6 Top Line	
Disp 6 Bottom Line	
Disp 6 Item 1	
Disp 6 Item 2	
Disp 6 Item 3	
Disp 6 Item 4	
Disp 6 Item 5	
USER DISPLAY 7	
Disp 7 Top Line	
Disp 7 Bottom Line	
Disp 7 Item 1	
Disp 7 Item 2	
Disp 7 Item 3	
Disp 7 Item 4	

Table 8–1: PRODUCT SETUP (Sheet 14 of 14)

SETTING	VALUE
Disp 7 Item 5	
USER DISPLAY 8	
Disp 8 Top Line	
Disp 8 Bottom Line	
Disp 8 Item 1	
Disp 8 Item 2	
Disp 8 Item 3	
Disp 8 Item 4	
Disp 8 Item 5	
INSTALLATION	
Relay Settings	
Relay Name	

Table 8–2: SYSTEM SETUP (Sheet 1 of 3)

SETTING	VALUE
CURRENT BANK 1	
Phase CT _____ Primary	
Phase CT _____ Secondary	
Ground CT _____ Primary	
Ground CT _____ Secondary	
CURRENT BANK 2	
Phase CT _____ Primary	
Phase CT _____ Secondary	
Ground CT _____ Primary	
Ground CT _____ Secondary	
CURRENT BANK 3	
Phase CT _____ Primary	
Phase CT _____ Secondary	
Ground CT _____ Primary	
Ground CT _____ Secondary	
CURRENT BANK 4	
Phase CT _____ Primary	
Phase CT _____ Secondary	
Ground CT _____ Primary	
Ground CT _____ Secondary	
CURRENT BANK 5	
Phase CT _____ Primary	
Phase CT _____ Secondary	
Ground CT _____ Primary	
Ground CT _____ Secondary	
CURRENT BANK 6	
Phase CT _____ Primary	
Phase CT _____ Secondary	
Ground CT _____ Primary	
Ground CT _____ Secondary	
VOLTAGE BANK 1	
Phase VT _____ Connection	
Phase VT _____ Secondary	
Phase VT _____ Ratio	
Auxiliary VT _____ Connection	
Auxiliary VT _____ Secondary	
Auxiliary VT _____ Ratio	
VOLTAGE BANK 2	
Phase VT _____ Connection	
Phase VT _____ Secondary	
Phase VT _____ Ratio	
Auxiliary VT _____ Connection	
Auxiliary VT _____ Secondary	
Auxiliary VT _____ Ratio	

Table 8–2: SYSTEM SETUP (Sheet 2 of 3)

SETTING	VALUE
VOLTAGE BANK 3	
Phase VT _____ Connection	
Phase VT _____ Secondary	
Phase VT _____ Ratio	
Auxiliary VT _____ Connection	
Auxiliary VT _____ Secondary	
Auxiliary VT _____ Ratio	
POWER SYSTEM	
Nominal Frequency	
Phase Rotation	
Frequency and Phase Reference	
Frequency Tracking	
SIGNAL SOURCE 1	
Source 1 Name	
Source 1 Phase CT	
Source 1 Ground CT	
Source 1 Phase VT	
Source 1 Auxiliary VT	
SIGNAL SOURCE 2	
Source 2 Name	
Source 2 Phase CT	
Source 2 Ground CT	
Source 2 Phase VT	
Source 2 Auxiliary VT	
SIGNAL SOURCE 3	
Source 3 Name	
Source 3 Phase CT	
Source 3 Ground CT	
Source 3 Phase VT	
Source 3 Auxiliary VT	
SIGNAL SOURCE 4	
Source 4 Name	
Source 4 Phase CT	
Source 4 Ground CT	
Source 4 Phase VT	
Source 4 Auxiliary VT	
SIGNAL SOURCE 5	
Source 5 Name	
Source 5 Phase CT	
GSource 5 round CT	
Source 5 Phase VT	
Source 5 Auxiliary VT	
SIGNAL SOURCE 6	
Source 6 Name	

Table 8–2: SYSTEM SETUP (Sheet 3 of 3)

SETTING	VALUE
Source 6 Phase CT	
Source 6 Ground CT	
Source 6 Phase VT	
Source 6 Auxiliary VT	

Table 8–3: FLEXCURVE™ TABLE

RESET	TIME MS	RESET	TIME MS	OPERATE	TIME MS	OPERATE	TIME MS	OPERATE	TIME MS	OPERATE	TIME MS
0.00		0.68		1.03		2.9		4.9		10.5	
0.05		0.70		1.05		3.0		5.0		11.0	
0.10		0.72		1.1		3.1		5.1		11.5	
0.15		0.74		1.2		3.2		5.2		12.0	
0.20		0.76		1.3		3.3		5.3		12.5	
0.25		0.78		1.4		3.4		5.4		13.0	
0.30		0.80		1.5		3.5		5.5		13.5	
0.35		0.82		1.6		3.6		5.6		14.0	
0.40		0.84		1.7		3.7		5.7		14.5	
0.45		0.86		1.8		3.8		5.8		15.0	
0.48		0.88		1.9		3.9		5.9		15.5	
0.50		0.90		2.0		4.0		6.0		16.0	
0.52		0.91		2.1		4.1		6.5		16.5	
0.54		0.92		2.2		4.2		7.0		17.0	
0.56		0.93		2.3		4.3		7.5		17.5	
0.58		0.94		2.4		4.4		8.0		18.0	
0.60		0.95		2.5		4.5		8.5		18.5	
0.62		0.96		2.6		4.6		9.0		19.0	
0.64		0.97		2.7		4.7		9.5		19.5	
0.66		0.98		2.8		4.8		10.0		20.0	

Table 8–4: FLEXCURVE™ TABLE

RESET	TIME MS	RESET	TIME MS	OPERATE	TIME MS	OPERATE	TIME MS	OPERATE	TIME MS	OPERATE	TIME MS
0.00		0.68		1.03		2.9		4.9		10.5	
0.05		0.70		1.05		3.0		5.0		11.0	
0.10		0.72		1.1		3.1		5.1		11.5	
0.15		0.74		1.2		3.2		5.2		12.0	
0.20		0.76		1.3		3.3		5.3		12.5	
0.25		0.78		1.4		3.4		5.4		13.0	
0.30		0.80		1.5		3.5		5.5		13.5	
0.35		0.82		1.6		3.6		5.6		14.0	
0.40		0.84		1.7		3.7		5.7		14.5	
0.45		0.86		1.8		3.8		5.8		15.0	
0.48		0.88		1.9		3.9		5.9		15.5	
0.50		0.90		2.0		4.0		6.0		16.0	
0.52		0.91		2.1		4.1		6.5		16.5	
0.54		0.92		2.2		4.2		7.0		17.0	
0.56		0.93		2.3		4.3		7.5		17.5	
0.58		0.94		2.4		4.4		8.0		18.0	
0.60		0.95		2.5		4.5		8.5		18.5	
0.62		0.96		2.6		4.6		9.0		19.0	
0.64		0.97		2.7		4.7		9.5		19.5	
0.66		0.98		2.8		4.8		10.0		20.0	

Table 8–5: GROUPED ELEMENTS (Sheet 1 of 14)

SETTING	VALUE
CURRENT ELEMENTS	
PHASE TOC1	
Phase TOC1 Function	
Phase TOC1 Signal Source	
Phase TOC1 Input	
Phase TOC1 Pickup	
Phase TOC1 Curve	
Phase TOC1 Multiplier	
Phase TOC1 Reset	
Phase TOC1 Voltage Restraint	
Phase TOC1 Block A	
Phase TOC1 Block B	
Phase TOC1 Block C	
Phase TOC1 Target	
Phase TOC1 Events	
PHASE TOC2	
Phase TOC2 Function	
Phase TOC2 Signal Source	
Phase TOC2 Input	
Phase TOC2 Pickup	
Phase TOC2 Curve	
Phase TOC2 Multiplier	
Phase TOC2 Reset	
Phase TOC2 Voltage Restraint	
Phase TOC2 Block A	
Phase TOC2 Block B	
Phase TOC2 Block C	
Phase TOC2 Target	
Phase TOC2 Events	
PHASE TOC3	
Phase TOC3 Function	
Phase TOC3 Signal Source	
Phase TOC3 Input	
Phase TOC3 Pickup	
Phase TOC3 Curve	
Phase TOC3 Multiplier	
Phase TOC3 Reset	
Phase TOC3 Voltage Restraint	
Phase TOC3 Block A	
Phase TOC3 Block B	
Phase TOC3 Block C	
Phase TOC3 Target	
Phase TOC3 Events	

Table 8–5: GROUPED ELEMENTS (Sheet 2 of 14)

SETTING	VALUE
PHASE TOC4	
Phase TOC4 Function	
Phase TOC4 Signal Source	
Phase TOC4 Input	
Phase TOC4 Pickup	
Phase TOC4 Curve	
Phase TOC4 Multiplier	
Phase TOC4 Reset	
Phase TOC4 Voltage Restraint	
Phase TOC4 Block A	
Phase TOC4 Block B	
Phase TOC4 Block C	
Phase TOC4 Target	
Phase TOC4 Events	
PHASE TOC5	
Phase TOC5 Function	
Phase TOC5 Signal Source	
Phase TOC5 Input	
Phase TOC5 Pickup	
Phase TOC5 Curve	
Phase TOC5 Multiplier	
Phase TOC5 Reset	
Phase TOC5 Voltage Restraint	
Phase TOC5 Block A	
Phase TOC5 Block B	
Phase TOC5 Block C	
Phase TOC5 Target	
Phase TOC5 Events	
PHASE TOC6	
Phase TOC6 Function	
Phase TOC6 Signal Source	
Phase TOC6 Input	
Phase TOC6 Pickup	
Phase TOC6 Curve	
Phase TOC6 Multiplier	
Phase TOC6 Reset	
Phase TOC6 Voltage Restraint	
Phase TOC6 Block A	
Phase TOC6 Block B	
Phase TOC6 Block C	
Phase TOC6 Target	
Phase TOC6 Events	
PHASE IOC1	
Phase IOC1 Function	

Table 8–5: GROUPED ELEMENTS (Sheet 3 of 14)

SETTING	VALUE
Phase IOC1 Signal Source	
Phase IOC1 Pickup	
Phase IOC1 Pickup Delay	
Phase IOC1 Reset Delay	
Phase IOC1 Block A	
Phase IOC1 Block B	
Phase IOC1 Block C	
Phase IOC1 Target	
Phase IOC1 Events	
PHASE IOC2	
Phase IOC2 Function	
Phase IOC2 Signal Source	
Phase IOC2 Pickup	
Phase IOC2 Pickup Delay	
Phase IOC2 Reset Delay	
Phase IOC2 Block A	
Phase IOC2 Block B	
Phase IOC2 Block C	
Phase IOC2 Target	
Phase IOC2 Events	
PHASE IOC3	
Phase IOC3 Function	
Phase IOC3 Signal Source	
Phase IOC3 Pickup	
Phase IOC3 Pickup Delay	
Phase IOC3 Reset Delay	
Phase IOC3 Block A	
Phase IOC3 Block B	
Phase IOC3 Block C	
Phase IOC3 Target	
Phase IOC3 Events	
PHASE IOC4	
Phase IOC4 Function	
Phase IOC4 Signal Source	
Phase IOC4 Pickup	
Phase IOC4 Pickup Delay	
Phase IOC4 Reset Delay	
Phase IOC4 Block A	
Phase IOC4 Block B	
Phase IOC4 Block C	
Phase IOC4 Target	
Phase IOC4 Events	
PHASE IOC5	
Phase IOC5 Function	
Phase IOC5 Signal Source	
Phase IOC5 Pickup	
Phase IOC5 Pickup Delay	

Table 8–5: GROUPED ELEMENTS (Sheet 4 of 14)

SETTING	VALUE
Phase IOC5 Reset Delay	
Phase IOC5 Block A	
Phase IOC5 Block B	
Phase IOC5 Block C	
Phase IOC5 Target	
Phase IOC5 Events	
PHASE IOC6	
Phase IOC6 Function	
Phase IOC6 Signal Source	
Phase IOC6 Pickup	
Phase IOC6 Pickup Delay	
Phase IOC6 Reset Delay	
Phase IOC6 Block A	
Phase IOC6 Block B	
Phase IOC6 Block C	
Phase IOC6 Target	
Phase IOC6 Events	
PHASE IOC7	
Phase IOC7 Function	
Phase IOC7 Signal Source	
Phase IOC7 Pickup	
Phase IOC7 Pickup Delay	
Phase IOC7 Reset Delay	
Phase IOC7 Block A	
Phase IOC7 Block B	
Phase IOC7 Block C	
Phase IOC7 Target	
Phase IOC7 Events	
PHASE IOC8	
Phase IOC8 Function	
Phase IOC8 Signal Source	
Phase IOC8 Pickup	
Phase IOC8 Pickup Delay	
Phase IOC8 Reset Delay	
Phase IOC8 Block A	
Phase IOC8 Block B	
Phase IOC8 Block C	
Phase IOC8 Target	
Phase IOC8 Events	
PHASE IOC9	
Phase IOC9 Function	
Phase IOC9 Signal Source	
Phase IOC9 Pickup	
Phase IOC9 Pickup Delay	
Phase IOC9 Reset Delay	
Phase IOC9 Block A	
Phase IOC9 Block B	

Table 8–5: GROUPED ELEMENTS (Sheet 5 of 14)

SETTING	VALUE
Phase IOC9 Block C	
Phase IOC9 Target	
Phase IOC9 Events	
PHASE IOC10	
Phase IOC10 Function	
Phase IOC10 Signal Source	
Phase IOC10 Pickup	
Phase IOC10 Pickup Delay	
Phase IOC10 Reset Delay	
Phase IOC10 Block A	
Phase IOC10 Block B	
Phase IOC10 Block C	
Phase IOC10 Target	
Phase IOC10 Events	
PHASE IOC11	
Phase IOC11 Function	
Phase IOC11 Signal Source	
Phase IOC11 Pickup	
Phase IOC11 Pickup Delay	
Phase IOC11 Reset Delay	
Phase IOC11 Block A	
Phase IOC11 Block B	
Phase IOC11 Block C	
Phase IOC11 Target	
Phase IOC11 Events	
PHASE IOC12	
Phase IOC12 Function	
Phase IOC12 Signal Source	
Phase IOC12 Pickup	
Phase IOC12 Pickup Delay	
Phase IOC12 Reset Delay	
Phase IOC12 Block A	
Phase IOC12 Block B	
Phase IOC12 Block C	
Phase IOC12 Target	
Phase IOC12 Events	
NEUTRAL TOC1	
Neutral TOC1 Function	
Neutral TOC1 Signal Source	
Neutral TOC1 Input	
Neutral TOC1 Pickup	
Neutral TOC1 Curve	
Neutral TOC1 TD Multiplier	
Neutral TOC1 Reset	
Neutral TOC1 Block	
Neutral TOC1 Target	
Neutral TOC1 Events	

Table 8–5: GROUPED ELEMENTS (Sheet 6 of 14)

SETTING	VALUE
NEUTRAL TOC2	
Neutral TOC2 Function	
Neutral TOC2 Signal Source	
Neutral TOC2 Input	
Neutral TOC2 Pickup	
Neutral TOC2 Curve	
Neutral TOC2 TD Multiplier	
Neutral TOC2 Reset	
Neutral TOC2 Block	
Neutral TOC2 Target	
Neutral TOC2 Events	
NEUTRAL TOC3	
Neutral TOC3 Function	
Neutral TOC3 Signal Source	
Neutral TOC3 Input	
Neutral TOC3 Pickup	
Neutral TOC3 Curve	
Neutral TOC3 TD Multiplier	
Neutral TOC3 Reset	
Neutral TOC3 Block	
Neutral TOC3 Target	
Neutral TOC3 Events	
NEUTRAL TOC4	
Neutral TOC4 Function	
Neutral TOC4 Signal Source	
Neutral TOC4 Input	
Neutral TOC4 Pickup	
Neutral TOC4 Curve	
Neutral TOC4 TD Multiplier	
Neutral TOC4 Reset	
Neutral TOC4 Block	
Neutral TOC4 Target	
Neutral TOC4 Events	
NEUTRAL TOC5	
Neutral TOC5 Function	
Neutral TOC5 Signal Source	
Neutral TOC5 Input	
Neutral TOC5 Pickup	
Neutral TOC5 Curve	
Neutral TOC5 TD Multiplier	
Neutral TOC5 Reset	
Neutral TOC5 Block	
Neutral TOC5 Target	
Neutral TOC5 Events	
NEUTRAL TOC6	
Neutral TOC6 Function	
Neutral TOC6 Signal Source	

Table 8–5: GROUPED ELEMENTS (Sheet 7 of 14)

SETTING	VALUE
Neutral TOC6 Input	
Neutral TOC6 Pickup	
Neutral TOC6 Curve	
Neutral TOC6 TD Multiplier	
Neutral TOC6 Reset	
Neutral TOC6 Block	
Neutral TOC6 Target	
Neutral TOC6 Events	
NEUTRAL IOC1	
Neutral IOC1 Function	
Neutral IOC1 Signal Source	
Neutral IOC1 Pickup	
Neutral IOC1 Pickup Delay	
Neutral IOC1 Reset Delay	
Neutral IOC1 Block	
Neutral IOC1 Target	
Neutral IOC1 Events	
NEUTRAL IOC2	
Neutral IOC2 Function	
Neutral IOC2 Signal Source	
Neutral IOC2 Pickup	
Neutral IOC2 Pickup Delay	
Neutral IOC2 Reset Delay	
Neutral IOC2 Block	
Neutral IOC2 Target	
Neutral IOC2 Events	
NEUTRAL IOC3	
Neutral IOC3 Function	
Neutral IOC3 Signal Source	
Neutral IOC3 Pickup	
Neutral IOC3 Pickup Delay	
Neutral IOC3 Reset Delay	
Neutral IOC3 Block	
Neutral IOC3 Target	
Neutral IOC3 Events	
NEUTRAL IOC4	
Neutral IOC4 Function	
Neutral IOC4 Signal Source	
Neutral IOC4 Pickup	
Neutral IOC4 Pickup Delay	
Neutral IOC4 Reset Delay	
Neutral IOC4 Block	
Neutral IOC4 Target	
Neutral IOC4 Events	
NEUTRAL IOC5	
Neutral IOC5 Function	
Neutral IOC5 Signal Source	

Table 8–5: GROUPED ELEMENTS (Sheet 8 of 14)

SETTING	VALUE
Neutral IOC5 Pickup	
Neutral IOC5 Pickup Delay	
Neutral IOC5 Reset Delay	
Neutral IOC5 Block	
Neutral IOC5 Target	
Neutral IOC5 Events	
NEUTRAL IOC6	
Neutral IOC6 Function	
Neutral IOC6 Signal Source	
Neutral IOC6 Pickup	
Neutral IOC6 Pickup Delay	
Neutral IOC6 Reset Delay	
Neutral IOC6 Block	
Neutral IOC6 Target	
Neutral IOC6 Events	
NEUTRAL IOC7	
Neutral IOC7 Function	
Neutral IOC7 Signal Source	
Neutral IOC7 Pickup	
Neutral IOC7 Pickup Delay	
Neutral IOC7 Reset Delay	
Neutral IOC7 Block	
Neutral IOC7 Target	
Neutral IOC7 Events	
NEUTRAL IOC8	
Neutral IOC8 Function	
Neutral IOC8 Signal Source	
Neutral IOC8 Pickup	
Neutral IOC8 Pickup Delay	
Neutral IOC8 Reset Delay	
Neutral IOC8 Block	
Neutral IOC8 Target	
Neutral IOC8 Events	
NEUTRAL IOC9	
Neutral IOC9 Function	
Neutral IOC9 Signal Source	
Neutral IOC9 Pickup	
Neutral IOC9 Pickup Delay	
Neutral IOC9 Reset Delay	
Neutral IOC9 Block	
Neutral IOC9 Target	
Neutral IOC9 Events	
NEUTRAL IOC10	
Neutral IOC10 Function	
Neutral IOC10 Signal Source	
Neutral IOC10 Pickup	
Neutral IOC10 Pickup Delay	

Table 8–5: GROUPED ELEMENTS (Sheet 9 of 14)

SETTING	VALUE
Neutral IOC10 Reset Delay	
Neutral IOC10 Block	
Neutral IOC10 Target	
Neutral IOC10 Events	
NEUTRAL IOC11	
Neutral IOC11 Function	
Neutral IOC11 Signal Source	
Neutral IOC11 Pickup	
Neutral IOC11 Pickup Delay	
Neutral IOC11 Reset Delay	
Neutral IOC11 Block	
Neutral IOC11 Target	
Neutral IOC11 Events	
NEUTRAL IOC12	
Neutral IOC12 Function	
Neutral IOC12 Signal Source	
Neutral IOC12 Pickup	
Neutral IOC12 Pickup Delay	
Neutral IOC12 Reset Delay	
Neutral IOC12 Block	
Neutral IOC12 Target	
Neutral IOC12 Events	
GROUND TOC1	
Ground TOC1 Function	
Ground TOC1 Signal Source	
Ground TOC1 Input	
Ground TOC1 Pickup	
Ground TOC1 Curve	
Ground TOC1 TD Multiplier	
Ground TOC1 Reset	
Ground TOC1 Block	
Ground TOC1 Target	
Ground TOC1 Events	
GROUND TOC2	
Ground TOC2 Function	
Ground TOC2 Signal Source	
Ground TOC2 Input	
Ground TOC2 Pickup	
Ground TOC2 Curve	
Ground TOC2 TD Multiplier	
Ground TOC2 Reset	
Ground TOC2 Block	
Ground TOC2 Target	
Ground TOC2 Events	
GROUND TOC3	
Ground TOC3 Function	
Ground TOC3 Signal Source	

Table 8–5: GROUPED ELEMENTS (Sheet 10 of 14)

SETTING	VALUE
Ground TOC3 Input	
Ground TOC3 Pickup	
Ground TOC3 Curve	
Ground TOC3 TD Multiplier	
Ground TOC3 Reset	
Ground TOC3 Block	
Ground TOC3 Target	
Ground TOC3 Events	
GROUND TOC4	
Ground TOC4 Function	
Ground TOC4 Signal Source	
Ground TOC4 Input	
Ground TOC4 Pickup	
Ground TOC4 Curve	
Ground TOC4 TD Multiplier	
Ground TOC4 Reset	
Ground TOC4 Block	
Ground TOC4 Target	
Ground TOC4 Events	
GROUND TOC5	
Ground TOC5 Function	
Ground TOC5 Signal Source	
Ground TOC5 Input	
Ground TOC5 Pickup	
Ground TOC5 Curve	
Ground TOC5 TD Multiplier	
Ground TOC5 Reset	
Ground TOC5 Block	
Ground TOC5 Target	
Ground TOC5 Events	
GROUND TOC6	
Ground TOC6 Function	
Ground TOC6 Signal Source	
Ground TOC6 Input	
Ground TOC6 Pickup	
Ground TOC6 Curve	
Ground TOC6 TD Multiplier	
Ground TOC6 Reset	
Ground TOC6 Block	
Ground TOC6 Target	
Ground TOC6 Events	
GROUND IOC1	
Ground IOC1 Function	
Ground IOC1 Signal Source	
Ground IOC1 Pickup	
Ground IOC1 Pickup Delay	
Ground IOC1 Reset Delay	

Table 8–5: GROUPED ELEMENTS (Sheet 11 of 14)

SETTING	VALUE
Ground IOC1 Block	
Ground IOC1 Target	
Ground IOC1 Events	
GROUND IOC2	
Ground IOC2 Function	
Ground IOC2 Signal Source	
Ground IOC2 Pickup	
Ground IOC2 Pickup Delay	
Ground IOC2 Reset Delay	
Ground IOC2 Block	
Ground IOC2 Target	
Ground IOC2 Events	
GROUND IOC3	
Ground IOC3 Function	
Ground IOC3 Signal Source	
Ground IOC3 Pickup	
Ground IOC3 Pickup Delay	
Ground IOC3 Reset Delay	
Ground IOC3 Block	
Ground IOC3 Target	
Ground IOC3 Events	
GROUND IOC4	
Ground IOC4 Function	
Ground IOC4 Signal Source	
Ground IOC4 Pickup	
Ground IOC4 Pickup Delay	
Ground IOC4 Reset Delay	
Ground IOC4 Block	
Ground IOC4 Target	
Ground IOC4 Events	
GROUND IOC5	
Ground IOC5 Function	
Ground IOC5 Signal Source	
Ground IOC5 Pickup	
Ground IOC5 Pickup Delay	
Ground IOC5 Reset Delay	
Ground IOC5 Block	
Ground IOC5 Target	
Ground IOC5 Events	
GROUND IOC6	
Ground IOC6 Function	
Ground IOC6 Signal Source	
Ground IOC6 Pickup	
Ground IOC6 Pickup Delay	
Ground IOC6 Reset Delay	
Ground IOC6 Block	
Ground IOC6 Target	

Table 8–5: GROUPED ELEMENTS (Sheet 12 of 14)

SETTING	VALUE
Ground IOC6 Events	
GROUND IOC7	
Ground IOC7 Function	
Ground IOC7 Signal Source	
Ground IOC7 Pickup	
Ground IOC7 Pickup Delay	
Ground IOC7 Reset Delay	
Ground IOC7 Block	
Ground IOC7 Target	
Ground IOC7 Events	
GROUND IOC8	
Ground IOC8 Function	
Ground IOC8 Signal Source	
Ground IOC8 Pickup	
Ground IOC8 Pickup Delay	
Ground IOC8 Reset Delay	
Ground IOC8 Block	
Ground IOC8 Target	
Ground IOC8 Events	
GROUND IOC9	
Ground IOC9 Function	
Ground IOC9 Signal Source	
Ground IOC9 Pickup	
Ground IOC9 Pickup Delay	
Ground IOC9 Reset Delay	
Ground IOC9 Block	
Ground IOC9 Target	
Ground IOC9 Events	
GROUND IOC10	
Ground IOC10 Function	
Ground IOC10 Signal Source	
Ground IOC10 Pickup	
Ground IOC10 Pickup Delay	
Ground IOC10 Reset Delay	
Ground IOC10 Block	
Ground IOC10 Target	
Ground IOC10 Events	
GROUND IOC11	
Ground IOC11 Function	
Ground IOC11 Signal Source	
Ground IOC11 Pickup	
Ground IOC11 Pickup Delay	
Ground IOC11 Reset Delay	
Ground IOC11 Block	
Ground IOC11 Target	
Ground IOC11 Events	

Table 8–5: GROUPED ELEMENTS (Sheet 13 of 14)

SETTING	VALUE
GROUND IOC12	
Ground IOC12 Function	
Ground IOC12 Signal Source	
Ground IOC12 Pickup	
Ground IOC12 Pickup Delay	
Ground IOC12 Reset Delay	
Ground IOC12 Block	
Ground IOC12 Target	
Ground IOC12 Events	
VOLTAGE ELEMENTS	
PHASE UNDERVOLTAGE 1	
Phase UV1 Function	
Phase UV1 Signal Source	
Phase UV1 Mode	
Phase UV1 Pickup	
Phase UV1 Curve	
Phase UV1 Delay	
Phase UV1 Minimum Voltage	
Phase UV1 Block	
Phase UV1 Target	
Phase UV1 Events	
PHASE UNDERVOLTAGE 2	
Phase UV2 Function	
Phase UV2 Signal Source	
Phase UV2 Mode	
Phase UV2 Pickup	
Phase UV2 Curve	
Phase UV2 Delay	
Phase UV2 Minimum Voltage	
Phase UV2 Block	
Phase UV2 Target	
Phase UV2 Events	
NEUTRAL OVERVOLTAGE 1	
Neutral OV1 Function	
Neutral OV1 Signal Source	
Neutral OV1 Pickup	
Neutral OV1 Pickup Delay	
Neutral OV1 Reset Delay	
Neutral OV1 Block	
Neutral OV1 Target	
Neutral OV1 Events	
AUXILIARY UNDERVOLTAGE 1	
Aux UV1 Function	
Aux UV1 Signal Source	
Aux UV1 Pickup	
Aux UV1 Curve	
Aux UV1 Delay	

Table 8–5: GROUPED ELEMENTS (Sheet 14 of 14)

SETTING	VALUE
Aux UV1 Minimum Voltage	
Aux UV1 Block	
Aux UV1 Target	
Aux UV1 Events	
AUXILIARY OVERVOLTAGE 1	
Aux OV1 Function	
Aux OV1 Signal Source	
Aux OV1 Pickup	
Aux OV1 Pickup Delay	
Aux OV1 Reset Delay	
Aux OV1 Block	
Aux OV1 Target	
Aux OV1 Events	

Table 8–6: CONTROL ELEMENTS (Sheet 1 of 7)

SETTING	VALUE
SETTING GROUPS	
Setting Groups Function	
Setting Groups Block	
Group 2 Activate On	
Group 3 Activate On	
Group 4 Activate On	
Group 5 Activate On	
Group 6 Activate On	
Group 7 Activate On	
Group 8 Activate On	
Setting Group Events	
UNDERFREQUENCY 1	
Underfreq 1 Function	
Underfreq 1 Block	
Underfreq 1 Source	
Underfreq 1 Min Volt/Amp	
Underfreq 1 Pickup	
Underfreq 1 Pickup Delay	
Underfreq 1 Reset Delay	
Underfreq 1 Target	
Underfreq 1 Events	
UNDERFREQUENCY 2	
Underfreq 2 Function	
Underfreq 2 Block	
Underfreq 2 Source	
Underfreq 2 Min Volt/Amp	
Underfreq 2 Pickup	
Underfreq 2 Pickup Delay	
Underfreq 2 Reset Delay	
Underfreq 2 Target	
Underfreq 2 Events	
UNDERFREQUENCY 3	
Underfreq 3 Function	
Underfreq 3 Block	
Underfreq 3 Source	
Underfreq 3 Min Volt/Amp	
Underfreq 3 Pickup	
Underfreq 3 Pickup Delay	
Underfreq 3 Reset Delay	
Underfreq 3 Target	
Underfreq 3 Events	
UNDERFREQUENCY 4	
Underfreq 4 Function	
Underfreq 4 Block	

Table 8–6: CONTROL ELEMENTS (Sheet 2 of 7)

SETTING	VALUE
Underfreq 4 Source	
Underfreq 4 Min Volt/Amp	
Underfreq 4 Pickup	
Underfreq 4 Pickup Delay	
Underfreq 4 Reset Delay	
Underfreq 4 Target	
Underfreq 4 Events	
UNDERFREQUENCY 5	
Underfreq 5 Function	
Underfreq 5 Block	
Underfreq 5 Source	
Underfreq 5 Min Volt/Amp	
Underfreq 5 Pickup	
Underfreq 5 Pickup Delay	
Underfreq 5 Reset Delay	
Underfreq 5 Target	
Underfreq 5 Events	
UNDERFREQUENCY 6	
Underfreq 6 Function	
Underfreq 6 Block	
Underfreq 6 Source	
Underfreq 6 Min Volt/Amp	
Underfreq 6 Pickup	
Underfreq 6 Pickup Delay	
Underfreq 6 Reset Delay	
Underfreq 6 Target	
Underfreq 6 Events	
AUTORECLOSE 1	
Function	
Initiate	
Block	
Max. Number of Shots	
Reduce Maximum to 1	
Reduce Maximum to 2	
Reduce Maximum to 3	
Manual Close	
Manual Reset from Lockout	
Reset Lockout If Breaker Closed	
Reset Lockout on Manual Close	
Breaker Closed	
Breaker Open	
Block Time Upon Manual Close	
Dead Time 1	
Dead Time 2	

Table 8–6: CONTROL ELEMENTS (Sheet 3 of 7)

SETTING	VALUE
Dead Time 3	
Dead Time 4	
Add Delay 1	
Delay 1	
Add Delay 2	
Delay 2	
Reset Lockout Delay	
Reset Time	
Incomplete Sequence Time	
Events	
AUTORECLOSE 2	
Function	
Initiate	
Block	
Max. Number of Shots	
Reduce Maximum to 1	
Reduce Maximum to 2	
Reduce Maximum to 3	
Manual Close	
Manual Reset from Lockout	
Reset Lockout If Breaker Closed	
Reset Lockout on Manual Close	
Breaker Closed	
Breaker Open	
Block Time Upon Manual Close	
Dead Time 1	
Dead Time 2	
Dead Time 3	
Dead Time 4	
Add Delay 1	
Delay 1	
Add Delay 2	
Delay 2	
Reset Lockout Delay	
Reset Time	
Incomplete Sequence Time	
Events	
AUTORECLOSE 3	
Function	
Initiate	
Block	
Max. Number of Shots	
Reduce Maximum to 1	
Reduce Maximum to 2	
Reduce Maximum to 3	
Manual Close	
Manual Reset from Lockout	

Table 8–6: CONTROL ELEMENTS (Sheet 4 of 7)

SETTING	VALUE
Reset Lockout If Breaker Closed	
Reset Lockout on Manual Close	
Breaker Closed	
Breaker Open	
Block Time Upon Manual Close	
Dead Time 1	
Dead Time 2	
Dead Time 3	
Dead Time 4	
Add Delay 1	
Delay 1	
Add Delay 2	
Delay 2	
Reset Lockout Delay	
Reset Time	
Incomplete Sequence Time	
Events	
DIGITAL ELEMENT 1	
Digital Element 1 Function	
Dig Elem 1 Name	
Dig Elem 1 Input	
Dig Elem 1 Pickup Delay	
Dig Elem 1 Reset Delay	
Dig Elem 1 Block	
Digital Element 1 Target	
Digital Element 1 Events	
DIGITAL ELEMENT 2	
Digital Element 2 Function	
Dig Elem 2 Name	
Dig Elem 2 Input	
Dig Elem 2 Pickup Delay	
Dig Elem 2 Reset Delay	
Dig Elem 2 Block	
Digital Element 2 Target	
Digital Element 2 Events	
DIGITAL ELEMENT 3	
Digital Element 3 Function	
Dig Elem 3 Name	
Dig Elem 3 Input	
Dig Elem 3 Pickup Delay	
Dig Elem 3 Reset Delay	
Dig Elem 3 Block	
Digital Element 3 Target	
Digital Element 3 Events	
DIGITAL ELEMENT 4	
Digital Element 4 Function	
Dig Elem 4 Name	

Table 8–6: CONTROL ELEMENTS (Sheet 5 of 7)

SETTING	VALUE
Dig Elem 4 Input	
Dig Elem 4 Pickup Delay	
Dig Elem 4 Reset Delay	
Dig Elem 4 Block	
Digital Element 4 Target	
Digital Element 4 Events	
DIGITAL ELEMENT 5	
Digital Element 5 Function	
Dig Elem 5 Name	
Dig Elem 5 Input	
Dig Elem 5 Pickup Delay	
Dig Elem 5 Reset Delay	
Dig Elem 5 Block	
Digital Element 5 Target	
Digital Element 5 Events	
DIGITAL ELEMENT 6	
Digital Element 6 Function	
Dig Elem 6 Name	
Dig Elem 6 Input	
Dig Elem 6 Pickup Delay	
Dig Elem 6 Reset Delay	
Dig Elem 6 Block	
Digital Element 6 Target	
Digital Element 6 Events	
DIGITAL ELEMENT 7	
Digital Element 7 Function	
Dig Elem 7 Name	
Dig Elem 7 Input	
Dig Elem 7 Pickup Delay	
Dig Elem 7 Reset Delay	
Dig Elem 7 Block	
Digital Element 7 Target	
Digital Element 7 Events	
DIGITAL ELEMENT 8	
Digital Element 8 Function	
Dig Elem 8 Name	
Dig Elem 8 Input	
Dig Elem 8 Pickup Delay	
Dig Elem 8 Reset Delay	
Dig Elem 8 Block	
Digital Element 8 Target	
Digital Element 8 Events	
DIGITAL ELEMENT 9	
Digital Element 9 Function	
Dig Elem 9 Name	
Dig Elem 9 Input	
Dig Elem 9 Pickup Delay	

Table 8–6: CONTROL ELEMENTS (Sheet 6 of 7)

SETTING	VALUE
Dig Elem 9 Reset Delay	
Dig Elem 9 Block	
Digital Element 9 Target	
Digital Element 9 Events	
DIGITAL ELEMENT 10	
Digital Element 10 Function	
Dig Elem 10 Name	
Dig Elem 10 Input	
Dig Elem 10 Pickup Delay	
Dig Elem 10 Reset Delay	
Dig Elem 10 Block	
Digital Element 10 Target	
Digital Element 10 Events	
DIGITAL ELEMENT 11	
Digital Element 11 Function	
Dig Elem 11 Name	
Dig Elem 11 Input	
Dig Elem 11 Pickup Delay	
Dig Elem 11 Reset Delay	
Dig Elem 11 Block	
Digital Element 11 Target	
Digital Element 11 Events	
DIGITAL ELEMENT 12	
Digital Element 12 Function	
Dig Elem 12 Name	
Dig Elem 12 Input	
Dig Elem 12 Pickup Delay	
Dig Elem 12 Reset Delay	
Dig Elem 12 Block	
Digital Element 12 Target	
Digital Element 12 Events	
DIGITAL ELEMENT 13	
Digital Element 13 Function	
Dig Elem 13 Name	
Dig Elem 13 Input	
Dig Elem 13 Pickup Delay	
Dig Elem 13 Reset Delay	
Dig Elem 13 Block	
Digital Element 13 Target	
Digital Element 13 Events	
DIGITAL ELEMENT 14	
Digital Element 14 Function	
Dig Elem 14 Name	
Dig Elem 14 Input	
Dig Elem 14 Pickup Delay	
Dig Elem 14 Reset Delay	
Dig Elem 14 Block	

Table 8–6: CONTROL ELEMENTS (Sheet 7 of 7)

SETTING	VALUE
Digital Element 14 Target	
Digital Element 14 Events	
DIGITAL ELEMENT 15	
Digital Element 15 Function	
Dig Elem 15 Name	
Dig Elem 15 Input	
Dig Elem 15 Pickup Delay	
Dig Elem 15 Reset Delay	
Dig Elem 15 Block	
Digital Element 15 Target	
Digital Element 15 Events	
DIGITAL ELEMENT 16	
Digital Element 16 Function	
Dig Elem 16 Name	
Dig Elem 16 Input	
Dig Elem 16 Pickup Delay	
Dig Elem 16 Reset Delay	
Dig Elem 16 Block	
Digital Element 16 Target	
Digital Element 16 Events	

Table 8–7: CONTACT INPUTS

CONTACT INPUT	ID	DEBNCE TIME	EVENTS	THRESHOLD

8.5.2 VIRTUAL INPUTS

Table 8–8: VIRTUAL INPUTS

VIRTUAL INPUT	FUNCTION	ID	TYPE	EVENTS
Virtual Input 1				
Virtual Input 2				
Virtual Input 3				
Virtual Input 4				
Virtual Input 5				
Virtual Input 6				
Virtual Input 7				
Virtual Input 8				
Virtual Input 9				
Virtual Input 10				
Virtual Input 11				
Virtual Input 12				
Virtual Input 13				
Virtual Input 14				
Virtual Input 15				
Virtual Input 16				
Virtual Input 17				
Virtual Input 18				
Virtual Input 19				
Virtual Input 20				
Virtual Input 21				
Virtual Input 22				
Virtual Input 23				
Virtual Input 24				
Virtual Input 25				
Virtual Input 26				
Virtual Input 27				
Virtual Input 28				
Virtual Input 29				
Virtual Input 30				
Virtual Input 31				
Virtual Input 32				

8.5.3 UCA SBO TIMER

Table 8–9: UCA SBO TIMER

UCA SBO TIMER	
UCA SBO Timeout	

Table 8–10: CONTACT OUTPUTS

CONTACT OUTPUT	ID	OPERATE	SEAL-IN	EVENTS

Table 8–11: VIRTUAL OUTPUTS (Sheet 1 of 2)

VIRTUAL OUTPUT	ID	EVENTS
1		
2		
3		
4		
5		
6		
7		
8		
9		
10		
11		
12		
13		
14		
15		
16		
17		
18		
19		
20		
21		
22		
23		
24		
25		
26		
27		
28		
29		
30		
31		
32		
33		
34		
35		
36		
37		
38		
39		
40		
41		
42		
43		

Table 8–11: VIRTUAL OUTPUTS (Sheet 2 of 2)

VIRTUAL OUTPUT	ID	EVENTS
44		
45		
46		
47		
48		
49		
50		
51		
52		
53		
54		
55		
56		
57		
58		
59		
60		
61		
62		
63		
64		

Table 8–12: REMOTE DEVICES

REMOTE DEVICE	ID
Remote Device 1	
Remote Device 2	
Remote Device 3	
Remote Device 4	
Remote Device 5	
Remote Device 6	
Remote Device 7	
Remote Device 8	
Remote Device 9	
Remote Device 10	
Remote Device 11	
Remote Device 12	
Remote Device 13	
Remote Device 14	
Remote Device 15	
Remote Device 16	

Table 8–13: REMOTE INPUTS

REMOTE INPUT	REMOTE DEVICE	BIT PAIR	DEFAULT STATE	EVENTS
Remote Input 1				
Remote Input 2				
Remote Input 3				
Remote Input 4				
Remote Input 5				
Remote Input 6				
Remote Input 7				
Remote Input 8				
Remote Input 9				
Remote Input 10				
Remote Input 11				
Remote Input 12				
Remote Input 13				
Remote Input 14				
Remote Input 15				
Remote Input 16				
Remote Input 17				
Remote Input 18				
Remote Input 19				
Remote Input 20				
Remote Input 21				
Remote Input 22				
Remote Input 23				
Remote Input 24				
Remote Input 25				
Remote Input 26				
Remote Input 27				
Remote Input 28				
Remote Input 29				
Remote Input 30				
Remote Input 31				
Remote Input 32				

8.5.8 REMOTE OUTPUTS

Table 8–14: REMOTE OUTPUTS (Sheet 1 of 2)

OUTPUT #	OPERAND	EVENTS
REMOTE OUTPUTS – DNA		
1		
2		
3		
4		
5		
6		
7		
8		
9		
10		
11		
12		
13		
14		
15		
16		
17		
18		
19		
20		
21		
22		
23		
24		
25		
26		
27		
28		
29		
30		
31		
32		

Table 8–14: REMOTE OUTPUTS (Sheet 2 of 2)

OUTPUT #	OPERAND	EVENTS
REMOTE OUTPUTS – UserSt		
1		
2		
3		
4		
5		
6		
7		
8		
9		
10		
11		
12		
13		
14		
15		
16		
17		
18		
19		
20		
21		
22		
23		
24		
25		
26		
27		
28		
29		
30		
31		
32		

8.5.9 RESETTING

SETTING	VALUE
RESETTING	
Reset Operand	

Table 8–15: DCMA INPUTS

DCMA INPUT	FUNCTION	ID	UNITS	RANGE	VALUES	
					MIN	MAX

8

8.6.2 RTD INPUTS

Table 8–16: RTD INPUTS

RTD INPUT	FUNCTION	ID	TYPE

Table 8–17: FORCE CONTACT INPUTS

FORCE CONTACT	INPUT

Table 8–18: FORCE CONTACT OUTPUTS

FORCE CONTACT	OUTPUT

Table A–1: FLEXANALOG PARAMETERS (Sheet 1 of 4)

SETTING	DISPLAY TEXT	DESCRIPTION
6144	SRC 1 Ia RMS	SRC 1 Phase A Current RMS (A)
6146	SRC 1 Ib RMS	SRC 1 Phase B Current RMS (A)
6148	SRC 1 Ic RMS	SRC 1 Phase C Current RMS (A)
6150	SRC 1 In RMS	SRC 1 Neutral Current RMS (A)
6152	SRC 1 Ia Mag	SRC 1 Phase A Current Magnitude (A)
6154	SRC 1 Ia Angle	SRC 1 Phase A Current Angle (°)
6155	SRC 1 Ib Mag	SRC 1 Phase B Current Magnitude (A)
6157	SRC 1 Ib Angle	SRC 1 Phase B Current Angle (°)
6158	SRC 1 Ic Mag	SRC 1 Phase C Current Magnitude (A)
6160	SRC 1 Ic Angle	SRC 1 Phase C Current Angle (°)
6161	SRC 1 In Mag	SRC 1 Neutral Current Magnitude (A)
6163	SRC 1 In Angle	SRC 1 Neutral Current Angle (°)
6164	SRC 1 Ig RMS	SRC 1 Ground Current RMS (A)
6166	SRC 1 Ig Mag	SRC 1 Ground Current Magnitude (A)
6168	SRC 1 Ig Angle	SRC 1 Ground Current Angle (°)
6169	SRC 1 I_0 Mag	SRC 1 Zero Sequence Current Magnitude (A)
6171	SRC 1 I_0 Angle	SRC 1 Zero Sequence Current Angle (°)
6172	SRC 1 I_1 Mag	SRC 1 Positive Sequence Current Magnitude (A)
6174	SRC 1 I_1 Angle	SRC 1 Positive Sequence Current Angle (°)
6175	SRC 1 I_2 Mag	SRC 1 Negative Sequence Current Magnitude (A)
6177	SRC 1 I_2 Angle	SRC 1 Negative Sequence Current Angle (°)
6178	SRC 1 Igd Mag	SRC 1 Differential Ground Current Magnitude (A)
6180	SRC 1 Igd Angle	SRC 1 Differential Ground Current Angle (°)
6208	SRC 2 Ia RMS	SRC 2 Phase A Current RMS (A)
6210	SRC 2 Ib RMS	SRC 2 Phase B Current RMS (A)
6212	SRC 2 Ic RMS	SRC 2 Phase C Current RMS (A)
6214	SRC 2 In RMS	SRC 2 Neutral Current RMS (A)
6216	SRC 2 Ia Mag	SRC 2 Phase A Current Magnitude (A)
6218	SRC 2 Ia Angle	SRC 2 Phase A Current Angle (°)
6219	SRC 2 Ib Mag	SRC 2 Phase B Current Magnitude (A)
6221	SRC 2 Ib Angle	SRC 2 Phase B Current Angle (°)
6222	SRC 2 Ic Mag	SRC 2 Phase C Current Magnitude (A)
6224	SRC 2 Ic Angle	SRC 2 Phase C Current Angle (°)
6225	SRC 2 In Mag	SRC 2 Neutral Current Magnitude (A)
6227	SRC 2 In Angle	SRC 2 Neutral Current Angle (°)
6228	SRC 2 Ig RMS	SRC 2 Ground Current RMS (A)
6230	SRC 2 Ig Mag	SRC 2 Ground Current Magnitude (A)
6232	SRC 2 Ig Angle	SRC 2 Ground Current Angle (°)
6233	SRC 2 I_0 Mag	SRC 2 Zero Sequence Current Magnitude (A)
6235	SRC 2 I_0 Angle	SRC 2 Zero Sequence Current Angle (°)
6236	SRC 2 I_1 Mag	SRC 2 Positive Sequence Current Magnitude (A)
6238	SRC 2 I_1 Angle	SRC 2 Positive Sequence Current Angle (°)
6239	SRC 2 I_2 Mag	SRC 2 Negative Sequence Current Magnitude (A)
6241	SRC 2 I_2 Angle	SRC 2 Negative Sequence Current Angle (°)

A

Table A–1: FLEXANALOG PARAMETERS (Sheet 2 of 4)

SETTING	DISPLAY TEXT	DESCRIPTION
6242	SRC 2 Igd Mag	SRC 2 Differential Ground Current Magnitude (A)
6244	SRC 2 Igd Angle	SRC 2 Differential Ground Current Angle (°)
6656	SRC 1 Vag RMS	SRC 1 Phase AG Voltage RMS (V)
6658	SRC 1 Vbg RMS	SRC 1 Phase BG Voltage RMS (V)
6660	SRC 1 Vcg RMS	SRC 1 Phase CG Voltage RMS (V)
6662	SRC 1 Vag Mag	SRC 1 Phase AG Voltage Magnitude (V)
6664	SRC 1 Vag Angle	SRC 1 Phase AG Voltage Angle (°)
6665	SRC 1 Vbg Mag	SRC 1 Phase BG Voltage Magnitude (V)
6667	SRC 1 Vbg Angle	SRC 1 Phase BG Voltage Angle (°)
6668	SRC 1 Vcg Mag	SRC 1 Phase CG Voltage Magnitude (V)
6670	SRC 1 Vcg Angle	SRC 1 Phase CG Voltage Angle (°)
6671	SRC 1 Vab RMS	SRC 1 Phase AB Voltage RMS (V)
6673	SRC 1 Vbc RMS	SRC 1 Phase BC Voltage RMS (V)
6675	SRC 1 Vca RMS	SRC 1 Phase CA Voltage RMS (V)
6677	SRC 1 Vab Mag	SRC 1 Phase AB Voltage Magnitude (V)
6679	SRC 1 Vab Angle	SRC 1 Phase AB Voltage Angle (°)
6680	SRC 1 Vbc Mag	SRC 1 Phase BC Voltage Magnitude (V)
6682	SRC 1 Vbc Angle	SRC 1 Phase BC Voltage Angle (°)
6683	SRC 1 Vca Mag	SRC 1 Phase CA Voltage Magnitude (V)
6685	SRC 1 Vca Angle	SRC 1 Phase CA Voltage Angle (°)
6686	SRC 1 Vx RMS	SRC 1 Auxiliary Voltage RMS (V)
6688	SRC 1 Vx Mag	SRC 1 Auxiliary Voltage Magnitude (V)
6690	SRC 1 Vx Angle	SRC 1 Auxiliary Voltage Angle (°)
6691	SRC 1 V_0 Mag	SRC 1 Zero Sequence Voltage Magnitude (V)
6693	SRC 1 V_0 Angle	SRC 1 Zero Sequence Voltage Angle (°)
6694	SRC 1 V_1 Mag	SRC 1 Positive Sequence Voltage Magnitude (V)
6696	SRC 1 V_1 Angle	SRC 1 Positive Sequence Voltage Angle (°)
6697	SRC 1 V_2 Mag	SRC 1 Negative Sequence Voltage Magnitude (V)
6699	SRC 1 V_2 Angle	SRC 1 Negative Sequence Voltage Angle (°)
6720	SRC 2 Vag RMS	SRC 2 Phase AG Voltage RMS (V)
6722	SRC 2 Vbg RMS	SRC 2 Phase BG Voltage RMS (V)
6724	SRC 2 Vcg RMS	SRC 2 Phase CG Voltage RMS (V)
6726	SRC 2 Vag Mag	SRC 2 Phase AG Voltage Magnitude (V)
6728	SRC 2 Vag Angle	SRC 2 Phase AG Voltage Angle (°)
6729	SRC 2 Vbg Mag	SRC 2 Phase BG Voltage Magnitude (V)
6731	SRC 2 Vbg Angle	SRC 2 Phase BG Voltage Angle (°)
6732	SRC 2 Vcg Mag	SRC 2 Phase CG Voltage Magnitude (V)
6734	SRC 2 Vcg Angle	SRC 2 Phase CG Voltage Angle (°)
6735	SRC 2 Vab RMS	SRC 2 Phase AB Voltage RMS (V)
6737	SRC 2 Vbc RMS	SRC 2 Phase BC Voltage RMS (V)
6739	SRC 2 Vca RMS	SRC 2 Phase CA Voltage RMS (V)
6741	SRC 2 Vab Mag	SRC 2 Phase AB Voltage Magnitude (V)
6743	SRC 2 Vab Angle	SRC 2 Phase AB Voltage Angle (°)
6744	SRC 2 Vbc Mag	SRC 2 Phase BC Voltage Magnitude (V)
6746	SRC 2 Vbc Angle	SRC 2 Phase BC Voltage Angle (°)
6747	SRC 2 Vca Mag	SRC 2 Phase CA Voltage Magnitude (V)
6749	SRC 2 Vca Angle	SRC 2 Phase CA Voltage Angle (°)

Table A–1: FLEXANALOG PARAMETERS (Sheet 3 of 4)

SETTING	DISPLAY TEXT	DESCRIPTION
6750	SRC 2 Vx RMS	SRC 2 Auxiliary Voltage RMS (V)
6752	SRC 2 Vx Mag	SRC 2 Auxiliary Voltage Magnitude (V)
6754	SRC 2 Vx Angle	SRC 2 Auxiliary Voltage Angle (°)
6755	SRC 2 V_0 Mag	SRC 2 Zero Sequence Voltage Magnitude (V)
6757	SRC 2 V_0 Angle	SRC 2 Zero Sequence Voltage Angle (°)
6758	SRC 2 V_1 Mag	SRC 2 Positive Sequence Voltage Magnitude (V)
6760	SRC 2 V_1 Angle	SRC 2 Positive Sequence Voltage Angle (°)
6761	SRC 2 V_2 Mag	SRC 2 Negative Sequence Voltage Magnitude (V)
6763	SRC 2 V_2 Angle	SRC 2 Negative Sequence Voltage Angle (°)
7168	SRC 1 P	SRC 1 Three Phase Real Power (W)
7170	SRC 1 Pa	SRC 1 Phase A Real Power (W)
7172	SRC 1 Pb	SRC 1 Phase B Real Power (W)
7174	SRC 1 Pc	SRC 1 Phase C Real Power (W)
7176	SRC 1 Q	SRC 1 Three Phase Reactive Power (var)
7178	SRC 1 Qa	SRC 1 Phase A Reactive Power (var)
7180	SRC 1 Qb	SRC 1 Phase B Reactive Power (var)
7182	SRC 1 Qc	SRC 1 Phase C Reactive Power (var)
7184	SRC 1 S	SRC 1 Three Phase Apparent Power (VA)
7186	SRC 1 Sa	SRC 1 Phase A Apparent Power (VA)
7188	SRC 1 Sb	SRC 1 Phase B Apparent Power (VA)
7190	SRC 1 Sc	SRC 1 Phase C Apparent Power (VA)
7192	SRC 1 PF	SRC 1 Three Phase Power Factor
7193	SRC 1 Phase A PF	SRC 1 Phase A Power Factor
7194	SRC 1 Phase B PF	SRC 1 Phase B Power Factor
7195	SRC 1 Phase C PF	SRC 1 Phase C Power Factor
7200	SRC 2 P	SRC 2 Three Phase Real Power (W)
7202	SRC 2 Pa	SRC 2 Phase A Real Power (W)
7204	SRC 2 Pb	SRC 2 Phase B Real Power (W)
7206	SRC 2 Pc	SRC 2 Phase C Real Power (W)
7208	SRC 2 Q	SRC 2 Three Phase Reactive Power (var)
7210	SRC 2 Qa	SRC 2 Phase A Reactive Power (var)
7212	SRC 2 Qb	SRC 2 Phase B Reactive Power (var)
7214	SRC 2 Qc	SRC 2 Phase C Reactive Power (var)
7216	SRC 2 S	SRC 2 Three Phase Apparent Power (VA)
7218	SRC 2 Sa	SRC 2 Phase A Apparent Power (VA)
7220	SRC 2 Sb	SRC 2 Phase B Apparent Power (VA)
7222	SRC 2 Sc	SRC 2 Phase C Apparent Power (VA)
7224	SRC 2 PF	SRC 2 Three Phase Power Factor
7225	SRC 2 Phase A PF	SRC 2 Phase A Power Factor
7226	SRC 2 Phase B PF	SRC 2 Phase B Power Factor
7227	SRC 2 Phase C PF	SRC 2 Phase C Power Factor
7424	SRC 1 Pos Watthour	SRC 1 Positive Watthour (Wh)
7426	SRC 1 Neg Watthour	SRC 1 Negative Watthour (Wh)
7428	SRC 1 Pos varh	SRC 1 Positive Varhour (varh)
7430	SRC 1 Neg varh	SRC 1 Negative Varhour (varh)
7440	SRC 2 Pos Watthour	SRC 2 Positive Watthour (Wh)
7442	SRC 2 Neg Watthour	SRC 2 Negative Watthour (Wh)

A

Table A–1: FLEXANALOG PARAMETERS (Sheet 4 of 4)

SETTING	DISPLAY TEXT	DESCRIPTION
7444	SRC 2 Pos varh	SRC 2 Positive Varhour (varh)
7446	SRC 2 Neg varh	SRC 2 Negative Varhour (varh)
7552	SRC 1 Frequency	SRC 1 Frequency (Hz)
7553	SRC 2 Frequency	SRC 2 Frequency (Hz)
7680	SRC 1 Demand Ia	SRC 1 Demand Ia (A)
7682	SRC 1 Demand Ib	SRC 1 Demand Ib (A)
7684	SRC 1 Demand Ic	SRC 1 Demand Ic (A)
7686	SRC 1 Demand Watt	SRC 1 Demand Watt (W)
7688	SRC 1 Demand var	SRC 1 Demand Var (var)
7690	SRC 1 Demand Va	SRC 1 Demand Va (VA)
7696	SRC 2 Demand Ia	SRC 2 Demand Ia (A)
7698	SRC 2 Demand Ib	SRC 2 Demand Ib (A)
7700	SRC 2 Demand Ic	SRC 2 Demand Ic (A)
7702	SRC 2 Demand Watt	SRC 2 Demand Watt (W)
7704	SRC 2 Demand var	SRC 2 Demand Var (var)
7706	SRC 2 Demand Va	SRC 2 Demand Va (VA)
32768	Tracking Frequency	Tracking Frequency (Hz)
39425	FlexElement 1 OpSig	FlexElement 1 Actual
39427	FlexElement 2 OpSig	FlexElement 2 Actual
39429	FlexElement 3 OpSig	FlexElement 3 Actual
39431	FlexElement 4 OpSig	FlexElement 4 Actual
39433	FlexElement 5 OpSig	FlexElement 5 Actual
39435	FlexElement 6 OpSig	FlexElement 6 Actual
39437	FlexElement 7 OpSig	FlexElement 7 Actual
39439	FlexElement 8 OpSig	FlexElement 8 Actual
39441	FlexElement 9 OpSig	FlexElement 9 Actual
39443	FlexElement 10 OpSig	FlexElement 10 Actual
39445	FlexElement 11 OpSig	FlexElement 11 Actual
39447	FlexElement 12 OpSig	FlexElement 12 Actual
39449	FlexElement 13 OpSig	FlexElement 13 Actual
39451	FlexElement 14 OpSig	FlexElement 14 Actual
39453	FlexElement 15 OpSig	FlexElement 15 Actual
39455	FlexElement 16 OpSig	FlexElement 16 Actual
40960	Communications Group	Groups Communications Group
40971	Active Setting Group	Current Setting Group

B.1.1 INTRODUCTION

The UR series relays support a number of communications protocols to allow connection to equipment such as personal computers, RTUs, SCADA masters, and programmable logic controllers. The Modicon Modbus RTU protocol is the most basic protocol supported by the UR. Modbus is available via RS232 or RS485 serial links or via ethernet (using the Modbus/TCP specification). The following description is intended primarily for users who wish to develop their own master communication drivers and applies to the serial Modbus RTU protocol. Note that:

- The UR always acts as a slave device, meaning that it never initiates communications; it only listens and responds to requests issued by a master computer.
- For Modbus®, a subset of the Remote Terminal Unit (RTU) protocol format is supported that allows extensive monitoring, programming, and control functions using read and write register commands.

B.1.2 PHYSICAL LAYER

The Modbus® RTU protocol is hardware-independent so that the physical layer can be any of a variety of standard hardware configurations including RS232 and RS485. The relay includes a faceplate (front panel) RS232 port and two rear terminal communications ports that may be configured as RS485, fiber optic, 10BaseT, or 10BaseF. Data flow is half-duplex in all configurations. See Chapter 3: HARDWARE for details on wiring.

Each data byte is transmitted in an asynchronous format consisting of 1 start bit, 8 data bits, 1 stop bit, and possibly 1 parity bit. This produces a 10 or 11 bit data frame. This can be important for transmission through modems at high bit rates (11 bit data frames are not supported by many modems at baud rates greater than 300).

The baud rate and parity are independently programmable for each communications port. Baud rates of 300, 1200, 2400, 4800, 9600, 14400, 19200, 28800, 33600, 38400, 57600, or 115200 bps are available. Even, odd, and no parity are available. Refer to the COMMUNICATIONS section of the SETTINGS chapter for further details.

The master device in any system must know the address of the slave device with which it is to communicate. The relay will not act on a request from a master if the address in the request does not match the relay's slave address (unless the address is the broadcast address – see below).

A single setting selects the slave address used for all ports, with the exception that for the faceplate port, the relay will accept any address when the Modbus® RTU protocol is used.

B.1.3 DATA LINK LAYER

Communications takes place in packets which are groups of asynchronously framed byte data. The master transmits a packet to the slave and the slave responds with a packet. The end of a packet is marked by 'dead-time' on the communications line. The following describes general format for both transmit and receive packets. For exact details on packet formatting, refer to subsequent sections describing each function code.

Table B–1: MODBUS PACKET FORMAT

DESCRIPTION	SIZE
SLAVE ADDRESS	1 byte
FUNCTION CODE	1 byte
DATA	N bytes
CRC	2 bytes
DEAD TIME	3.5 bytes transmission time

SLAVE ADDRESS

This is the address of the slave device that is intended to receive the packet sent by the master and to perform the desired action. Each slave device on a communications bus must have a unique address to prevent bus contention. All of the relay's ports have the same address which is programmable from 1 to 254; see Chapter 5 for details. Only the addressed slave will respond to a packet that starts with its address. Note that the faceplate port is an exception to this rule; it will act on a message containing any slave address.

A master transmit packet with a slave address of 0 indicates a broadcast command. All slaves on the communication link will take action based on the packet, but none will respond to the master. Broadcast mode is only recognized when associated with FUNCTION CODE 05h. For any other function code, a packet with broadcast mode slave address 0 will be ignored.

FUNCTION CODE

This is one of the supported functions codes of the unit which tells the slave what action to perform. See the SUPPORTED FUNCTION CODES section for complete details. An exception response from the slave is indicated by setting the high order bit of the function code in the response packet. See the EXCEPTION RESPONSES section for further details.

DATA

This will be a variable number of bytes depending on the function code. This may include actual values, settings, or addresses sent by the master to the slave or by the slave to the master.

CRC

This is a two byte error checking code. The RTU version of Modbus® includes a 16 bit cyclic redundancy check (CRC-16) with every packet which is an industry standard method used for error detection. If a Modbus® slave device receives a packet in which an error is indicated by the CRC, the slave device will not act upon or respond to the packet thus preventing any erroneous operations. See the CRC-16 ALGORITHM section for a description of how to calculate the CRC.

DEAD TIME

A packet is terminated when no data is received for a period of 3.5 byte transmission times (about 15 ms at 2400 bps, 2 ms at 19200 bps, and 300 µs at 115200 bps). Consequently, the transmitting device must not allow gaps between bytes longer than this interval. Once the dead time has expired without a new byte transmission, all slaves start listening for a new packet from the master except for the addressed slave.

B.1.4 CRC-16 ALGORITHM

The CRC-16 algorithm essentially treats the entire data stream (data bits only; start, stop and parity ignored) as one continuous binary number. This number is first shifted left 16 bits and then divided by a characteristic polynomial (11000000000000101B). The 16 bit remainder of the division is appended to the end of the packet, MSByte first. The resulting packet including CRC, when divided by the same polynomial at the receiver will give a zero remainder if no transmission errors have occurred. This algorithm requires the characteristic polynomial to be reverse bit ordered. The most significant bit of the characteristic polynomial is dropped, since it does not affect the value of the remainder.

Note: A C programming language implementation of the CRC algorithm will be provided upon request.

Table B–2: CRC-16 ALGORITHM

SYMBOLS:	-->	data transfer
	A	16 bit working register
	Alow	low order byte of A
	Ahigh	high order byte of A
	CRC	16 bit CRC-16 result
	i,j	loop counters
	(+)	logical EXCLUSIVE-OR operator
	N	total number of data bytes
	Di	i-th data byte (i = 0 to N-1)
	G	16 bit characteristic polynomial = 1010000000000001 (binary) with MSbit dropped and bit order reversed
	shr (x)	right shift operator (th LSbit of x is shifted into a carry flag, a '0' is shifted into the MSbit of x, all other bits are shifted right one location)

ALGORITHM:	1.	FFFF (hex) --> A	
	2.	0 --> i	
	3.	0 --> j	
	4.	Di (+) Alow --> Alow	
	5.	j + 1 --> j	
	6.	shr (A)	
	7.	Is there a carry?	No: go to 8 Yes: G (+) A --> A and continue.
	8.	Is j = 8?	No: go to 5 Yes: continue
	9.	i + 1 --> i	
	10.	Is i = N?	No: go to 3 Yes: continue
	11.	A --> CRC	

B.2.1 SUPPORTED FUNCTION CODES

Modbus® officially defines function codes from 1 to 127 though only a small subset is generally needed. The relay supports some of these functions, as summarized in the following table. Subsequent sections describe each function code in detail.

FUNCTION CODE		MODBUS DEFINITION	GE POWER MANAGEMENT DEFINITION
HEX	DEC		
03	3	Read Holding Registers	Read Actual Values or Settings
04	4	Read Holding Registers	Read Actual Values or Settings
05	5	Force Single Coil	Execute Operation
06	6	Preset Single Register	Store Single Setting
10	16	Preset Multiple Registers	Store Multiple Settings

B.2.2 FUNCTION CODE 03H/04H: READ ACTUAL VALUES OR SETTINGS

This function code allows the master to read one or more consecutive data registers (actual values or settings) from a relay. Data registers are always 16 bit (two byte) values transmitted with high order byte first. The maximum number of registers that can be read in a single packet is 125. See the section MODBUS® MEMORY MAP for exact details on the data registers.

Since some PLC implementations of Modbus® only support one of function codes 03h and 04h, the relay interpretation allows either function code to be used for reading one or more consecutive data registers. The data starting address will determine the type of data being read. Function codes 03h and 04h are therefore identical.

The following table shows the format of the master and slave packets. The example shows a master device requesting 3 register values starting at address 4050h from slave device 11h (17 decimal); the slave device responds with the values 40, 300, and 0 from registers 4050h, 4051h, and 4052h, respectively.

Table B–3: MASTER AND SLAVE DEVICE PACKET TRANSMISSION EXAMPLE

MASTER TRANSMISSION	
PACKET FORMAT	EXAMPLE (HEX)
SLAVE ADDRESS	11
FUNCTION CODE	04
DATA STARTING ADDRESS - hi	40
DATA STARTING ADDRESS - lo	50
NUMBER OF REGISTERS - hi	00
NUMBER OF REGISTERS - lo	03
CRC - lo	A7
CRC - hi	4A

SLAVE RESPONSE	
PACKET FORMAT	EXAMPLE (HEX)
SLAVE ADDRESS	11
FUNCTION CODE	04
BYTE COUNT	06
DATA #1 - hi	00
DATA #1 - lo	28
DATA #2 - hi	01
DATA #2 - lo	2C
DATA #3 - hi	00
DATA #3 - lo	00
CRC - lo	0D
CRC - hi	60

B.2.3 FUNCTION CODE 05H: EXECUTE OPERATION

This function code allows the master to perform various operations in the relay. Available operations are in the table SUMMARY OF OPERATION CODES.

The following table shows the format of the master and slave packets. The example shows a master device requesting the slave device 11H (17 dec) to perform a reset. The hi and lo CODE VALUE bytes always have the values 'FF' and '00' respectively and are a remnant of the original Modbus® definition of this function code.

Table B–4: MASTER AND SLAVE DEVICE PACKET TRANSMISSION EXAMPLE

MASTER TRANSMISSION	
PACKET FORMAT	**EXAMPLE (HEX)**
SLAVE ADDRESS	11
FUNCTION CODE	05
OPERATION CODE - hi	00
OPERATION CODE - lo	01
CODE VALUE - hi	FF
CODE VALUE - lo	00
CRC - lo	DF
CRC - hi	6A

SLAVE RESPONSE	
PACKET FORMAT	**EXAMPLE (HEX)**
SLAVE ADDRESS	11
FUNCTION CODE	05
OPERATION CODE - hi	00
OPERATION CODE - lo	01
CODE VALUE - hi	FF
CODE VALUE - lo	00
CRC - lo	DF
CRC - hi	6A

Table B–5: SUMMARY OF OPERATION CODES (FUNCTION CODE 05H)

OPERATION CODE (HEX)	DEFINITION	DESCRIPTION
0000	NO OPERATION	Does not do anything.
0001	RESET	Performs the same function as the faceplate RESET key.
0005	CLEAR EVENT RECORDS	Performs the same function as the faceplate **CLEAR EVENT RECORDS** menu command.
0006	CLEAR OSCILLOGRAPHY	Clears all oscillography records.
1000 to 101F	VIRTUAL IN 1-32 ON/OFF	Sets the states of Virtual Inputs 1 to 32 either "ON" or "OFF".

B.2.4 FUNCTION CODE 06H: STORE SINGLE SETTING

This function code allows the master to modify the contents of a single setting register in an relay. Setting registers are always 16 bit (two byte) values transmitted high order byte first.

The following table shows the format of the master and slave packets. The example shows a master device storing the value 200 at memory map address 4051h to slave device 11h (17 dec).

Table B–6: MASTER AND SLAVE DEVICE PACKET TRANSMISSION EXAMPLE

MASTER TRANSMISSION	
PACKET FORMAT	**EXAMPLE (HEX)**
SLAVE ADDRESS	11
FUNCTION CODE	06
DATA STARTING ADDRESS - hi	40
DATA STARTING ADDRESS - lo	51
DATA - hi	00
DATA - lo	C8
CRC - lo	CE
CRC - hi	DD

SLAVE RESPONSE	
PACKET FORMAT	**EXAMPLE (HEX)**
SLAVE ADDRESS	11
FUNCTION CODE	06
DATA STARTING ADDRESS - hi	40
DATA STARTING ADDRESS - lo	51
DATA - hi	00
DATA - lo	C8
CRC - lo	CE
CRC - hi	DD

B.2.5 FUNCTION CODE 10H: STORE MULTIPLE SETTINGS

This function code allows the master to modify the contents of a one or more consecutive setting registers in a relay. Setting registers are 16-bit (two byte) values transmitted high order byte first. The maximum number of setting registers that can be stored in a single packet is 60. The following table shows the format of the master and slave packets. The example shows a master device storing the value 200 at memory map address 4051h, and the value 1 at memory map address 4052h to slave device 11h (17 dec).

Table B–7: MASTER AND SLAVE DEVICE PACKET TRANSMISSION EXAMPLE

MASTER TRANSMISSION	
PACKET FORMAT	**EXAMPLE (HEX)**
SLAVE ADDRESS	11
FUNCTION CODE	10
DATA STARTING ADDRESS - hi	40
DATA STARTING ADDRESS - lo	51
NUMBER OF SETTINGS - hi	00
NUMBER OF SETTINGS - lo	02
BYTE COUNT	04
DATA #1 - high order byte	00
DATA #1 - low order byte	C8
DATA #2 - high order byte	00
DATA #2 - low order byte	01
CRC - low order byte	12
CRC - high order byte	62

SLAVE RESPONSE	
PACKET FORMAT	**EXMAPLE (HEX)**
SLAVE ADDRESS	11
FUNCTION CODE	10
DATA STARTING ADDRESS - hi	40
DATA STARTING ADDRESS - lo	51
NUMBER OF SETTINGS - hi	00
NUMBER OF SETTINGS - lo	02
CRC - lo	07
CRC - hi	64

B.2.6 EXCEPTION RESPONSES

Programming or operation errors usually happen because of illegal data in a packet. These errors result in an exception response from the slave. The slave detecting one of these errors sends a response packet to the master with the high order bit of the function code set to 1.

The following table shows the format of the master and slave packets. The example shows a master device sending the unsupported function code 39h to slave device 11.

Table B–8: MASTER AND SLAVE DEVICE PACKET TRANSMISSION EXAMPLE

MASTER TRANSMISSION	
PACKET FORMAT	**EXAMPLE (HEX)**
SLAVE ADDRESS	11
FUNCTION CODE	39
CRC - low order byte	CD
CRC - high order byte	F2

SLAVE RESPONSE	
PACKET FORMAT	**EXAMPLE (HEX)**
SLAVE ADDRESS	11
FUNCTION CODE	B9
ERROR CODE	01
CRC - low order byte	93
CRC - high order byte	95

B.3.1 OBTAINING UR FILES USING MODBUS® PROTOCOL

The UR relay has a generic file transfer facility, meaning that you use the same method to obtain all of the different types of files from the unit. The Modbus registers that implement file transfer are found in the "Modbus File Transfer (Read/Write)" and "Modbus File Transfer (Read Only)" modules, starting at address 3100 in the Modbus Memory Map. To read a file from the UR relay, use the following steps:

1. Write the filename to the "Name of file to read" register using a write multiple registers command. If the name is shorter than 80 characters, you may write only enough registers to include all the text of the filename. Filenames are not case sensitive.
2. Repeatedly read all the registers in "Modbus File Transfer (Read Only)" using a read multiple registers command. It is not necessary to read the entire data block, since the UR relay will remember which was the last register you read. The "position" register is initially zero and thereafter indicates how many bytes (2 times the number of registers) you have read so far. The "size of..." register indicates the number of bytes of data remaining to read, to a maximum of 244.
3. Keep reading until the "size of..." register is smaller than the number of bytes you are transferring. This condition indicates end of file. Discard any bytes you have read beyond the indicated block size.
4. If you need to re-try a block, read only the "size of.." and "block of data", without reading the position. The file pointer is only incremented when you read the position register, so the same data block will be returned as was read in the previous operation. On the next read, check to see if the position is where you expect it to be, and discard the previous block if it is not (this condition would indicate that the UR relay did not process your original read request).

The UR relay retains connection-specific file transfer information, so files may be read simultaneously on multiple Modbus connections.

a) OBTAINING FILES FROM THE UR USING OTHER PROTOCOLS

All the files available via Modbus may also be retrieved using the standard file transfer mechanisms in other protocols (for example, TFTP or MMS).

b) COMTRADE, OSCILLOGRAPHY AND DATA LOGGER FILES

Oscillography and data logger files are formatted using the COMTRADE file format per IEEE PC37.111 Draft 7c (02 September 1997). The files may be obtained in either text or binary COMTRADE format.

c) READING OSCILLOGRAPHY FILES

Familiarity with the oscillography feature is required to understand the following description. Refer to the OSCILLOGRAPHY section in the SETTINGS chapter for additional details.

The Oscillography_Number_of_Triggers register is incremented by one every time a new oscillography file is triggered (captured) and cleared to zero when oscillography data is cleared. When a new trigger occurs, the associated oscillography file is assigned a file identifier number equal to the incremented value of this register; the newest file number is equal to the Oscillography_Number_of_Triggers register. This register can be used to determine if any new data has been captured by periodically reading it to see if the value has changed; if the number has increased then new data is available.

The Oscillography_Number_of_Records setting specifies the maximum number of files (and the number of cycles of data per file) that can be stored in memory of the relay. The Oscillography_Available_Records register specifies the actual number of files that are stored and still available to be read out of the relay.

Writing ‘Yes’ (i.e. the value 1) to the Oscillography_Clear_Data register clears oscillography data files, clears both the Oscillography_Number_of_Triggers and Oscillography_Available_Records registers to zero, and sets the Oscillography_Last_Cleared_Date to the present date and time.

To read binary COMTRADE oscillography files, read the following filenames:

- OSCnnnn.CFG
- OSCnnn.DAT

Replace "nnn" with the desired oscillography trigger number. For ASCII format, use the following file names

- OSCAnnnn.CFG
- OSCAnnn.DAT

d) READING DATA LOGGER FILES

Familiarity with the data logger feature is required to understand this description. Refer to the DATA LOGGER section of Chapter 5 for details. To read the entire data logger in binary COMTRADE format, read the following files.

- datalog.cfg
- datalog.dat

To read the entire data logger in ASCII COMTRADE format, read the following files.

- dataloga.cfg
- dataloga.dat

To limit the range of records to be returned in the COMTRADE files, append the following to the filename before writing it:

- To read from a specific time to the end of the log: <space> startTime
- To read a specific range of records: <space> startTime <space> endTime
- Replace <startTime> and <endTime> with Julian dates (seconds since Jan. 1 1970) as numeric text.

e) READING EVENT RECORDER FILES

To read the entire event recorder contents in ASCII format (the only available format), use the following filename:

- `EVT.TXT`

To read from a specific record to the end of the log, use the following filename:

- `EVTnnn.TXT` (replace "nnn" with the desired starting record number)

B.3.2 MODBUS® PASSWORD OPERATION

The COMMAND password is set up at memory location 4000. Storing a value of "0" removes COMMAND password protection. When reading the password setting, the encrypted value (zero if no password is set) is returned. COMMAND security is required to change the COMMAND password. Similarly, the SETTING password is set up at memory location 4002. These are the same settings and encrypted values found in the **SETTINGS ⇨ PRODUCT SETUP ⇨⇩ PASSWORD SECURITY** menu via the keypad. Enabling password security for the faceplate display will also enable it for Modbus, and vice-versa.

To gain COMMAND level security access, the COMMAND password must be entered at memory location 4008. To gain SETTING level security access, the SETTING password must be entered at memory location 400A. The entered SETTING password must match the current SETTING password setting, or must be zero, to change settings or download firmware.

COMMAND and SETTING passwords each have a 30-minute timer. Each timer starts when you enter the particular password, and is re-started whenever you “use” it. For example, writing a setting re-starts the SETTING password timer and writing a command register or forcing a coil re-starts the COMMAND password timer. The value read at memory location 4010 can be used to confirm whether a COMMAND password is enabled or disabled (0 for Disabled). The value read at memory location 4011 can be used to confirm whether a SETTING password is enabled or disabled.

COMMAND or SETTING password security access is restricted to the particular port or particular TCP/IP connection on which the entry was made. Passwords must be entered when accessing the relay through other ports or connections, and the passwords must be re-entered after disconnecting and re-connecting on TCP/IP.

B

Table B–9: MODBUS MEMORY MAP (Sheet 1 of 28)

ADDR	REGISTER NAME	RANGE	UNITS	STEP	FORMAT	DEFAULT
Product Information (Read Only)						
0000	UR Product Type	0 to 65535	---	1	F001	0
0002	Product Version	0 to 655.35	---	0.01	F001	1
Product Information (Read Only -- Written by Factory)						
0010	Serial Number	---	---	---	F203	"0"
0020	Manufacturing Date	0 to 4294967295	---	1	F050	0
0022	Modification Number	0 to 65535	---	1	F001	0
0040	Order Code	---	---	---	F204	"Order Code x "
0090	Ethernet MAC Address	---	---	---	F072	0
0093	Reserved (13 items)	---	---	---	F001	0
00A0	CPU Module Serial Number	---	---	---	F203	(none)
00B0	CPU Supplier Serial Number	---	---	---	F203	(none)
00C0	Ethernet Sub Module Serial Number (8 items)	---	---	---	F203	(none)
Self Test Targets (Read Only)						
0200	Self Test States (2 items)	0 to 4294967295	0	1	F143	0
Front Panel (Read Only)						
0204	LED Column x State (9 items)	0 to 65535	---	1	F501	0
0220	Display Message	---	---	---	F204	(none)
Keypress Emulation (Read/Write)						
0280	Simulated keypress – write zero before each keystroke	0 to 26	---	1	F190	0 (No key – use between real key)
Virtual Input Commands (Read/Write Command) (32 modules)						
0400	Virtual Input x State	0 to 1	---	1	F108	0 (Off)
0401	...Repeated for module number 2					
0402	...Repeated for module number 3					
0403	...Repeated for module number 4					
0404	...Repeated for module number 5					
0405	...Repeated for module number 6					
0406	...Repeated for module number 7					
0407	...Repeated for module number 8					
0408	...Repeated for module number 9					
0409	...Repeated for module number 10					
040A	...Repeated for module number 11					
040B	...Repeated for module number 12					
040C	...Repeated for module number 13					
040D	...Repeated for module number 14					
040E	...Repeated for module number 15					
040F	...Repeated for module number 16					
0410	...Repeated for module number 17					
0411	...Repeated for module number 18					
0412	...Repeated for module number 19					
0413	...Repeated for module number 20					
0414	...Repeated for module number 21					
0415	...Repeated for module number 22					
0416	...Repeated for module number 23					
0417	...Repeated for module number 24					
0418	...Repeated for module number 25					
0419	...Repeated for module number 26					
041A	...Repeated for module number 27					
041B	...Repeated for module number 28					
041C	...Repeated for module number 29					

B

Table B–9: MODBUS MEMORY MAP (Sheet 2 of 28)

ADDR	REGISTER NAME	RANGE	UNITS	STEP	FORMAT	DEFAULT
041D	...Repeated for module number 30					
041E	...Repeated for module number 31					
041F	...Repeated for module number 32					
Flex States (Read Only)						
0900	Flex State Bits (16 items)	0 to 65535	---	1	F001	0
Element States (Read Only)						
1000	Element Operate States (64 items)	0 to 65535	---	1	F502	0
User Displays Actuals (Read Only)						
1080	Formatted user-definable displays (8 items)	---	---	---	F200	(none)
Modbus User Map Actuals (Read Only)						
1200	User Map Values (256 items)	0 to 65535	---	1	F001	0
Element Targets (Read Only)						
14C0	Target Sequence	0 to 65535	---	1	F001	0
14C1	Number of Targets	0 to 65535	---	1	F001	0
Element Targets (Read/Write)						
14C2	Target to Read	0 to 65535	---	1	F001	0
Element Targets (Read Only)						
14C3	Target Message	---	---	---	F200	"."
Digital I/O States (Read Only						
1500	Contact Input States (6 items)	0 to 65535	---	1	F500	0
1508	Virtual Input States (2 items)	0 to 65535	---	1	F500	0
1510	Contact Output States (4 items)	0 to 65535	---	1	F500	0
1518	Contact Output Current States (4 items)	0 to 65535	---	1	F500	0
1520	Contact Output Voltage States (4 items)	0 to 65535	---	1	F500	0
1528	Virtual Output States (4 items)	0 to 65535	---	1	F500	0
1530	Contact Output Detectors (4 items)	0 to 65535	---	1	F500	0
Remote I/O States (Read Only)						
1540	Remote Device x States	0 to 65535	---	1	F500	0
1542	Remote Input x States (2 items)	0 to 65535	---	1	F500	0
1550	Remote Devices Online	0 to 1	---	1	F126	0 (No)
Remote Device Status (Read Only) (16 modules)						
1551	Remote Device x StNum	0 to 4294967295	---	1	F003	0
1553	Remote Device x SqNum	0 to 4294967295	---	1	F003	0
1555	...Repeated for module number 2					
1559	...Repeated for module number 3					
155D	...Repeated for module number 4					
1561	...Repeated for module number 5					
1565	...Repeated for module number 6					
1569	...Repeated for module number 7					
156D	...Repeated for module number 8					
1571	...Repeated for module number 9					
1575	...Repeated for module number 10					
1579	...Repeated for module number 11					
157D	...Repeated for module number 12					
1581	...Repeated for module number 13					
1585	...Repeated for module number 14					
1589	...Repeated for module number 15					
158D	...Repeated for module number 16					
Ethernet Fibre Channel Status (Read/Write)						
1610	Ethernet Primary Fibre Channel Status	0 to 2	---	1	F134	0 (Fail)
1611	Ethernet Secondary Fibre Channel Status	0 to 2	---	1	F134	0 (Fail)
Data Logger Actuals (Read Only)						
1618	Data Logger Channel Count	0 to 16	CHNL	1	F001	0
1619	Time of oldest available samples	0 to 4294967295	seconds	1	F050	0

Table B–9: MODBUS MEMORY MAP (Sheet 3 of 28)

ADDR	REGISTER NAME	RANGE	UNITS	STEP	FORMAT	DEFAULT
161B	Time of newest available samples	0 to 4294967295	seconds	1	F050	0
161D	Data Logger Duration	0 to 999.9	DAYS	0.1	F001	0
Source Current (Read Only) (6 modules)						
1800	Phase A Current RMS	0 to 999999.999	A	0.001	F060	0
1802	Phase B Current RMS	0 to 999999.999	A	0.001	F060	0
1804	Phase C Current RMS	0 to 999999.999	A	0.001	F060	0
1806	Neutral Current RMS	0 to 999999.999	A	0.001	F060	0
1808	Phase A Current Magnitude	0 to 999999.999	A	0.001	F060	0
180A	Phase A Current Angle	-359.9 to 0	°	0.1	F002	0
180B	Phase B Current Magnitude	0 to 999999.999	A	0.001	F060	0
180D	Phase B Current Angle	-359.9 to 0	°	0.1	F002	0
180E	Phase C Current Magnitude	0 to 999999.999	A	0.001	F060	0
1810	Phase C Current Angle	-359.9 to 0	°	0.1	F002	0
1811	Neutral Current Magnitude	0 to 999999.999	A	0.001	F060	0
1813	Neutral Current Angle	-359.9 to 0	°	0.1	F002	0
1814	Ground Current RMS	0 to 999999.999	A	0.001	F060	0
1816	Ground Current Magnitude	0 to 999999.999	A	0.001	F060	0
1818	Ground Current Angle	-359.9 to 0	°	0.1	F002	0
1819	Zero Sequence Current Magnitude	0 to 999999.999	A	0.001	F060	0
181B	Zero Sequence Current Angle	-359.9 to 0	°	0.1	F002	0
181C	Positive Sequence Current Magnitude	0 to 999999.999	A	0.001	F060	0
181E	Positive Sequence Current Angle	-359.9 to 0	°	0.1	F002	0
181F	Negative Sequence Current Magnitude	0 to 999999.999	A	0.001	F060	0
1821	Negative Sequence Current Angle	-359.9 to 0	°	0.1	F002	0
1822	Differential Ground Current Magnitude	0 to 999999.999	A	0.001	F060	0
1824	Differential Ground Current Angle	-359.9 to 0	°	0.1	F002	0
1825	Reserved (27 items)	---	---	---	F001	0
1840	...Repeated for module number 2					
1880	...Repeated for module number 3					
18C0	...Repeated for module number 4					
1900	...Repeated for module number 5					
1940	...Repeated for module number 6					
Source Voltage (Read Only) (6 modules)						
1A00	Phase AG Voltage RMS	0 to 999999.999	V	0.001	F060	0
1A02	Phase BG Voltage RMS	0 to 999999.999	V	0.001	F060	0
1A04	Phase CG Voltage RMS	0 to 999999.999	V	0.001	F060	0
1A06	Phase AG Voltage Magnitude	0 to 999999.999	V	0.001	F060	0
1A08	Phase AG Voltage Angle	-359.9 to 0	°	0.1	F002	0
1A09	Phase BG Voltage Magnitude	0 to 999999.999	V	0.001	F060	0
1A0B	Phase BG Voltage Angle	-359.9 to 0	°	0.1	F002	0
1A0C	Phase CG Voltage Magnitude	0 to 999999.999	V	0.001	F060	0
1A0E	Phase CG Voltage Angle	-359.9 to 0	°	0.1	F002	0
1A0F	Phase AB or AC Voltage RMS	0 to 999999.999	V	0.001	F060	0
1A11	Phase BC or BA Voltage RMS	0 to 999999.999	V	0.001	F060	0
1A13	Phase CA or CB Voltage RMS	0 to 999999.999	V	0.001	F060	0
1A15	Phase AB or AC Voltage Magnitude	0 to 999999.999	V	0.001	F060	0
1A17	Phase AB or AC Voltage Angle	-359.9 to 0	°	0.1	F002	0
1A18	Phase BC or BA Voltage Magnitude	0 to 999999.999	V	0.001	F060	0
1A1A	Phase BC or BA Voltage Angle	-359.9 to 0	°	0.1	F002	0
1A1B	Phase CA or CB Voltage Magnitude	0 to 999999.999	V	0.001	F060	0
1A1D	Phase CA or CB Voltage Angle	-359.9 to 0	°	0.1	F002	0
1A1E	Auxiliary Voltage RMS	0 to 999999.999	V	0.001	F060	0
1A20	Auxiliary Voltage Magnitude	0 to 999999.999	V	0.001	F060	0
1A22	Auxiliary Voltage Angle	-359.9 to 0	°	0.1	F002	0

B

Table B–9: MODBUS MEMORY MAP (Sheet 4 of 28)

ADDR	REGISTER NAME	RANGE	UNITS	STEP	FORMAT	DEFAULT
1A23	Zero Sequence Voltage Magnitude	0 to 999999.999	V	0.001	F060	0
1A25	Zero Sequence Voltage Angle	-359.9 to 0	°	0.1	F002	0
1A26	Positive Sequence Voltage Magnitude	0 to 999999.999	V	0.001	F060	0
1A28	Positive Sequence Voltage Angle	-359.9 to 0	°	0.1	F002	0
1A29	Negative Sequence Voltage Magnitude	0 to 999999.999	V	0.001	F060	0
1A2B	Negative Sequence Voltage Angle	-359.9 to 0	°	0.1	F002	0
1A2C	Reserved (20 items)	---	---	---	F001	0
1A40	...Repeated for module number 2					
1A80	...Repeated for module number 3					
1AC0	...Repeated for module number 4					
1B00	...Repeated for module number 5					
1B40	...Repeated for module number 6					
Source Power (Read Only) (6 modules)						
1C00	Three Phase Real Power	-1000000000000 to 1000000000000	W	0.001	F060	0
1C02	Phase A Real Power	-1000000000000 to 1000000000000	W	0.001	F060	0
1C04	Phase B Real Power	-1000000000000 to 1000000000000	W	0.001	F060	0
1C06	Phase C Real Power	-1000000000000 to 1000000000000	W	0.001	F060	0
1C08	Three Phase Reactive Power	-1000000000000 to 1000000000000	var	0.001	F060	0
1C0A	Phase A Reactive Power	-1000000000000 to 1000000000000	var	0.001	F060	0
1C0C	Phase B Reactive Power	-1000000000000 to 1000000000000	var	0.001	F060	0
1C0E	Phase C Reactive Power	-1000000000000 to 1000000000000	var	0.001	F060	0
1C10	Three Phase Apparent Power	-1000000000000 to 1000000000000	VA	0.001	F060	0
1C12	Phase A Apparent Power	-1000000000000 to 1000000000000	VA	0.001	F060	0
1C14	Phase B Apparent Power	-1000000000000 to 1000000000000	VA	0.001	F060	0
1C16	Phase C Apparent Power	-1000000000000 to 1000000000000	VA	0.001	F060	0
1C18	Three Phase Power Factor	-0.999 to 1	---	0.001	F013	0
1C19	Phase A Power Factor	-0.999 to 1	---	0.001	F013	0
1C1A	Phase B Power Factor	-0.999 to 1	---	0.001	F013	0
1C1B	Phase C Power Factor	-0.999 to 1	---	0.001	F013	0
1C1C	Reserved (4 items)	---	---	---	F001	0
1C20	...Repeated for module number 2					
1C40	...Repeated for module number 3					
1C60	...Repeated for module number 4					
1C80	...Repeated for module number 5					
1CA0	...Repeated for module number 6					
Source Energy (Read Only Non-Volatile) (6 modules)						
1D00	Positive Watthour	0 to 1000000000000	Wh	0.001	F060	0
1D02	Negative Watthour	0 to 1000000000000	Wh	0.001	F060	0
1D04	Positive Varhour	0 to 1000000000000	varh	0.001	F060	0
1D06	Negative Varhour	0 to 1000000000000	varh	0.001	F060	0
1D08	Reserved (8 items)	---	---	---	F001	0
1D10	...Repeated for module number 2					
1D20	...Repeated for module number 3					
1D30	...Repeated for module number 4					
1D40	...Repeated for module number 5					
1D50	...Repeated for module number 6					

Table B–9: MODBUS MEMORY MAP (Sheet 5 of 28)

ADDR	REGISTER NAME	RANGE	UNITS	STEP	FORMAT	DEFAULT
Energy Commands (Read/Write Command)						
1D60	Energy Clear Command	0 to 1	---	1	F126	0 (No)
Source Frequency (Read Only) (6 modules)						
1D80	Frequency	2 to 90	Hz	0.01	F001	0
1D81	...Repeated for module number 2					
1D82	...Repeated for module number 3					
1D83	...Repeated for module number 4					
1D84	...Repeated for module number 5					
1D85	...Repeated for module number 6					
Source Demand (Read Only) (6 modules)						
1E00	Demand Ia	0 to 999999.999	A	0.001	F060	0
1E02	Demand Ib	0 to 999999.999	A	0.001	F060	0
1E04	Demand Ic	0 to 999999.999	A	0.001	F060	0
1E06	Demand Watt	0 to 999999.999	W	0.001	F060	0
1E08	Demand Var	0 to 999999.999	var	0.001	F060	0
1E0A	Demand Va	0 to 999999.999	VA	0.001	F060	0
1E0C	Reserved (4 items)	---	---	---	F001	0
1E10	...Repeated for module number 2					
1E20	...Repeated for module number 3					
1E30	...Repeated for module number 4					
1E40	...Repeated for module number 5					
1E50	...Repeated for module number 6					
Source Demand Peaks (Read Only Non-Volatile) (6 modules)						
1E80	SRC X Demand Ia Max	0 to 999999.999	A	0.001	F060	0
1E82	SRC X Demand Ia Max Date	0 to 4294967295	---	1	F050	0
1E84	SRC X Demand Ib Max	0 to 999999.999	A	0.001	F060	0
1E86	SRC X Demand Ib Max Date	0 to 4294967295	---	1	F050	0
1E88	SRC X Demand Ic Max	0 to 999999.999	A	0.001	F060	0
1E8A	SRC X Demand Ic Max Date	0 to 4294967295	---	1	F050	0
1E8C	SRC X Demand Watt Max	0 to 999999.999	W	0.001	F060	0
1E8E	SRC X Demand Watt Max Date	0 to 4294967295	---	1	F050	0
1E90	SRC X Demand Var	0 to 999999.999	var	0.001	F060	0
1E92	SRC X Demand Var Max Date	0 to 4294967295	---	1	F050	0
1E94	SRC X Demand Va Max	0 to 999999.999	VA	0.001	F060	0
1E96	SRC X Demand Va Max Date	0 to 4294967295	---	1	F050	0
1E98	Reserved (8 items)	---	---	---	F001	0
1EA0	...Repeated for module number 2					
1EC0	...Repeated for module number 3					
1EE0	...Repeated for module number 4					
1F00	...Repeated for module number 5					
1F20	...Repeated for module number 6					
Autoreclose Status (Read Only) (6 modules)						
2410	Autoreclose Count	0 to 65535	---	1	F001	0
2411	...Repeated for module number 2					
2412	...Repeated for module number 3					
2413	...Repeated for module number 4					
2414	...Repeated for module number 5					
2415	...Repeated for module number 6					
Expanded FlexStates (Read Only)						
2B00	FlexStates, one per register (256 items)	0 to 1	---	1	F108	0 (Off)
Expanded Digital I/O states (Read Only)						
2D00	Contact Input States, one per register (96 items)	0 to 1	---	1	F108	0 (Off)
2D80	Contact Output States, one per register (64 items)	0 to 1	---	1	F108	0 (Off)
2E00	Virtual Output States, one per register (64 items)	0 to 1	---	1	F108	0 (Off)

B

Table B–9: MODBUS MEMORY MAP (Sheet 6 of 28)

ADDR	REGISTER NAME	RANGE	UNITS	STEP	FORMAT	DEFAULT
Expanded Remote I/O Status (Read Only)						
2F00	Remote Device States, one per register (16 items)	0 to 1	---	1	F155	0 (Offline)
2F80	Remote Input States, one per register (32 items)	0 to 1	---	1	F108	0 (Off)
Oscillography Values (Read Only)						
3000	Oscillography Number of Triggers	0 to 65535	---	1	F001	0
3001	Oscillography Available Records	0 to 65535	---	1	F001	0
3002	Oscillography Last Cleared Date	0 to 400000000	---	1	F050	0
3004	Oscillography Number Of Cycles Per Record	0 to 65535	---	1	F001	0
Oscillography Commands (Read/Write Command)						
3005	Oscillography Force Trigger	0 to 1	---	1	F126	0 (No)
3011	Oscillography Clear Data	0 to 1	---	1	F126	0 (No)
Modbus File Transfer (Read/Write)						
3100	Name of file to read	---	---	---	F204	(none)
Modbus File Transfer (Read Only)						
3200	Character position of current block within file	0 to 4294967295	---	1	F003	0
3202	Size of currently-available data block	0 to 65535	---	1	F001	0
3203	Block of data from requested file (122 items)	0 to 65535	---	1	F001	0
Event Recorder (Read Only)						
3400	Events Since Last Clear	0 to 4294967295	---	1	F003	0
3402	Number of Available Events	0 to 4294967295	---	1	F003	0
3404	Event Recorder Last Cleared Date	0 to 4294967295	---	1	F050	0
Event Recorder (Read/Write Command)						
3406	Event Recorder Clear Command	0 to 1	---	1	F126	0 (No)
DCMA Input Values (Read Only) (24 modules)						
34C0	DCMA Inputs x Value	-9999.999 to 9999.999	---	0.001	F004	0
34C2	...Repeated for module number 2					
34C4	...Repeated for module number 3					
34C6	...Repeated for module number 4					
34C8	...Repeated for module number 5					
34CA	...Repeated for module number 6					
34CC	...Repeated for module number 7					
34CE	...Repeated for module number 8					
34D0	...Repeated for module number 9					
34D2	...Repeated for module number 10					
34D4	...Repeated for module number 11					
34D6	...Repeated for module number 12					
34D8	...Repeated for module number 13					
34DA	...Repeated for module number 14					
34DC	...Repeated for module number 15					
34DE	...Repeated for module number 16					
34E0	...Repeated for module number 17					
34E2	...Repeated for module number 18					
34E4	...Repeated for module number 19					
34E6	...Repeated for module number 20					
34E8	...Repeated for module number 21					
34EA	...Repeated for module number 22					
34EC	...Repeated for module number 23					
34EE	...Repeated for module number 24					
RTD Input Values (Read Only) (48 modules)						
34F0	RTD Inputs x Value	-32768 to 32767	°C	1	F002	0
34F1	...Repeated for module number 2					
34F2	...Repeated for module number 3					
34F3	...Repeated for module number 4					
34F4	...Repeated for module number 5					

Table B–9: MODBUS MEMORY MAP (Sheet 7 of 28)

ADDR	REGISTER NAME	RANGE	UNITS	STEP	FORMAT	DEFAULT
34F5	...Repeated for module number 6					
34F6	...Repeated for module number 7					
34F7	...Repeated for module number 8					
34F8	...Repeated for module number 9					
34F9	...Repeated for module number 10					
34FA	...Repeated for module number 11					
34FB	...Repeated for module number 12					
34FC	...Repeated for module number 13					
34FD	...Repeated for module number 14					
34FE	...Repeated for module number 15					
34FF	...Repeated for module number 16					
3500	...Repeated for module number 17					
3501	...Repeated for module number 18					
3502	...Repeated for module number 19					
3503	...Repeated for module number 20					
3504	...Repeated for module number 21					
3505	...Repeated for module number 22					
3506	...Repeated for module number 23					
3507	...Repeated for module number 24					
3508	...Repeated for module number 25					
3509	...Repeated for module number 26					
350A	...Repeated for module number 27					
350B	...Repeated for module number 28					
350C	...Repeated for module number 29					
350D	...Repeated for module number 30					
350E	...Repeated for module number 31					
350F	...Repeated for module number 32					
3510	...Repeated for module number 33					
3511	...Repeated for module number 34					
3512	...Repeated for module number 35					
3513	...Repeated for module number 36					
3514	...Repeated for module number 37					
3515	...Repeated for module number 38					
3516	...Repeated for module number 39					
3517	...Repeated for module number 40					
3518	...Repeated for module number 41					
3519	...Repeated for module number 42					
351A	...Repeated for module number 43					
351B	...Repeated for module number 44					
351C	...Repeated for module number 45					
351D	...Repeated for module number 46					
351E	...Repeated for module number 47					
351F	...Repeated for module number 48					
Ohm Input Values (Read Only) (2 modules)						
3520	Ohm Inputs x Value	0 to 65535	Ω	1	F001	0
3521	...Repeated for module number 2					
Passwords (Read/Write Command)						
4000	Command Password Setting	0 to 4294967295	---	1	F003	0
Passwords (Read/Write Setting)						
4002	Setting Password Setting	0 to 4294967295	---	1	F003	0
Passwords (Read/Write)						
4008	Command Password Entry	0 to 4294967295	---	1	F003	0
400A	Setting Password Entry	0 to 4294967295	---	1	F003	0

B

Table B–9: MODBUS MEMORY MAP (Sheet 8 of 28)

ADDR	REGISTER NAME	RANGE	UNITS	STEP	FORMAT	DEFAULT
Passwords (Read Only)						
4010	Command Password Status	0 to 1	---	1	F102	0 (Disabled)
4011	Setting Password Status	0 to 1	---	1	F102	0 (Disabled)
Preferences (Read/Write Setting)						
4050	Flash Message Time	0.5 to 10	s	0.1	F001	10
4051	Default Message Timeout	10 to 900	s	1	F001	300
4052	Default Message Intensity	0 to 3	---	1	F101	0 (25%)
Communications (Read/Write Setting)						
407E	COM1 minimum response time	0 to 1000	ms	10	F001	0
407F	COM2 minimum response time	0 to 1000	ms	10	F001	0
4080	Modbus Slave Address	1 to 254	---	1	F001	254
4083	RS485 Com1 Baud Rate	0 to 11	---	1	F112	5 (19200)
4084	RS485 Com1 Parity	0 to 2	---	1	F113	0 (None)
4085	RS485 Com2 Baud Rate	0 to 11	---	1	F112	5 (19200)
4086	RS485 Com2 Parity	0 to 2	---	1	F113	0 (None)
4087	IP Address	0 to 4294967295	---	1	F003	56554706
4089	IP Subnet Mask	0 to 4294967295	---	1	F003	4294966272
408B	Gateway IP Address	0 to 4294967295	---	1	F003	56554497
408D	Network Address NSAP	---	---	---	F074	0
4097	Default GOOSE Update Time	1 to 60	s	1	F001	60
4098	Ethernet Primary Fibre Channel Link Monitor	0 to 1	---	1	F102	0 (Disabled)
4099	Ethernet Secondary Fibre Channel Link Monitor	0 to 1	---	1	F102	0 (Disabled)
409A	DNP Port	0 to 4	---	1	F177	0 (NONE)
409B	DNP Address	0 to 65519	---	1	F001	255
409C	DNP Client Addresses (2 items)	0 to 4294967295	---	1	F003	0
40A0	TCP Port Number for the Modbus protocol	1 to 65535	---	1	F001	502
40A1	TCP/UDP Port Number for the DNP Protocol	1 to 65535	---	1	F001	20000
40A2	TCP Port Number for the UCA/MMS Protocol	1 to 65535	---	1	F001	102
40A3	TCP Port No. for the HTTP (Web Server) Protocol	1 to 65535	---	1	F001	80
40A4	Main UDP Port Number for the TFTP Protocol	1 to 65535	---	1	F001	69
40A5	Data Transfer UDP Port Numbers for the TFTP Protocol (zero means "automatic") (2 items)	0 to 65535	---	1	F001	0
40A7	DNP Unsolicited Responses Function	0 to 1	---	1	F102	0 (Disabled)
40A8	DNP Unsolicited Responses Timeout	0 to 60	s	1	F001	5
40A9	DNP Unsolicited Responses Max Retries	1 to 255	---	1	F001	10
40AA	DNP Unsolicited Responses Destination Address	0 to 65519	---	1	F001	1
40AB	Ethernet Operation Mode	0 to 1	---	1	F192	0 (Half-Duplex)
40AC	DNP User Map Function	0 to 1	---	1	F102	0 (Disabled)
40AD	DNP Number of Sources used in Analog points list	1 to 6	---	1	F001	1
40AE	DNP Current Scale Factor	0 to 5	---	1	F194	2 (1)
40AF	DNP Voltage Scale Factor	0 to 5	---	1	F194	2 (1)
40B0	DNP Power Scale Factor	0 to 5	---	1	F194	2 (1)
40B1	DNP Energy Scale Factor	0 to 5	---	1	F194	2 (1)
40B2	DNP Other Scale Factor	0 to 5	---	1	F194	2 (1)
40B3	DNP Current Default Deadband	0 to 65535	---	1	F001	30000
40B4	DNP Voltage Default Deadband	0 to 65535	---	1	F001	30000
40B5	DNP Power Default Deadband	0 to 65535	---	1	F001	30000
40B6	DNP Energy Default Deadband	0 to 65535	---	1	F001	30000
40B7	DNP Other Default Deadband	0 to 65535	---	1	F001	30000
40B8	DNP IIN Time Sync Bit Period	1 to 10080	min	1	F001	1440
40B9	DNP Message Fragment Size	30 to 2048	---	1	F001	240
40BA	DNP Client Address 3	0 to 4294967295	---	1	F003	0
40BC	DNP Client Address 4	0 to 4294967295	---	1	F003	0
40BE	DNP Client Address 5	0 to 4294967295	---	1	F003	0

Table B–9: MODBUS MEMORY MAP (Sheet 9 of 28)

ADDR	REGISTER NAME	RANGE	UNITS	STEP	FORMAT	DEFAULT
40C0	DNP Communications Reserved (8 items)	0 to 1	---	1	F001	0
40C8	UCA Logical Device Name	---	---	---	F203	"UCADevice"
40D0	UCA Communications Reserved (16 items)	0 to 1	---	1	F001	0
40E0	TCP Port Number for the IEC 60870-5-104 Protocol	1 to 65535	---	1	F001	2404
40E1	IEC 60870-5-104 Protocol Function	0 to 1	---	1	F102	0 (Disabled)
40E2	IEC 60870-5-104 Protocol Common Addr of ASDU	0 to 65535	---	1	F001	0
40E3	IEC 60870-5-104 Protocol Cyclic Data Tx Period	1 to 65535	s	1	F001	60
40E4	IEC No. of Sources used in M_ME_NC_1 point list	1 to 6	---	1	F001	1
40E5	IEC Current Default Threshold	0 to 65535	---	1	F001	30000
40E6	IEC Voltage Default Threshold	0 to 65535	---	1	F001	30000
40E7	IEC Power Default Threshold	0 to 65535	---	1	F001	30000
40E8	IEC Energy Default Threshold	0 to 65535	---	1	F001	30000
40E9	IEC Other Default Threshold	0 to 65535	---	1	F001	30000
40EA	IEC Communications Reserved (22 items)	0 to 1	---	1	F001	0
4100	DNP Binary Input Block of 16 Points (58 items)	0 to 58	---	1	F197	0 (Not Used)
Data Logger Commands (Read/Write Command)						
4170	Clear Data Logger	0 to 1	---	1	F126	0 (No)
Data Logger (Read/Write Setting)						
4180	Data Logger Rate	0 to 7	---	1	F178	1 (1 min)
4181	Data Logger Channel Settings (16 items)	---	---	---	F600	0
Clock (Read/Write Command)						
41A0	RTC Set Time	0 to 235959	---	1	F003	0
Clock (Read/Write Setting)						
41A2	SR Date Format	0 to 4294967295	---	1	F051	0
41A4	SR Time Format	0 to 4294967295	---	1	F052	0
41A6	IRIG-B Signal Type	0 to 2	---	1	F114	0 (None)
Oscillography (Read/Write Setting)						
41C0	Oscillography Number of Records	1 to 64	---	1	F001	15
41C1	Oscillography Trigger Mode	0 to 1	---	1	F118	0 (Auto Overwrite)
41C2	Oscillography Trigger Position	0 to 100	%	1	F001	50
41C3	Oscillography Trigger Source	0 to 65535	---	1	F300	0
41C4	Oscillography AC Input Waveforms	0 to 4	---	1	F183	2 (16 samples/cycle)
41D0	Oscillography Analog Channel X (16 items)	0 to 65535	---	1	F600	0
4200	Oscillography Digital Channel X (63 items)	0 to 65535	---	1	F300	0
Trip and Alarm LEDs (Read/Write Setting)						
4260	Trip LED Input FlexLogic Operand	0 to 65535	---	1	F300	0
4261	Alarm LED Input FlexLogic Operand	0 to 65535	---	1	F300	0
User Programmable LEDs (Read/Write Setting) (48 modules)						
4280	FlexLogic Operand to Activate LED	0 to 65535	---	1	F300	0
4281	User LED type (latched or self-resetting)	0 to 1	---	1	F127	1 (Self-Reset)
4282	...Repeated for module number 2					
4284	...Repeated for module number 3					
4286	...Repeated for module number 4					
4288	...Repeated for module number 5					
428A	...Repeated for module number 6					
428C	...Repeated for module number 7					
428E	...Repeated for module number 8					
4290	...Repeated for module number 9					
4292	...Repeated for module number 10					
4294	...Repeated for module number 11					
4296	...Repeated for module number 12					
4298	...Repeated for module number 13					
429A	...Repeated for module number 14					
429C	...Repeated for module number 15					

B

Table B–9: MODBUS MEMORY MAP (Sheet 10 of 28)

ADDR	REGISTER NAME	RANGE	UNITS	STEP	FORMAT	DEFAULT
429E	...Repeated for module number 16					
42A0	...Repeated for module number 17					
42A2	...Repeated for module number 18					
42A4	...Repeated for module number 19					
42A6	...Repeated for module number 20					
42A8	...Repeated for module number 21					
42AA	...Repeated for module number 22					
42AC	...Repeated for module number 23					
42AE	...Repeated for module number 24					
42B0	...Repeated for module number 25					
42B2	...Repeated for module number 26					
42B4	...Repeated for module number 27					
42B6	...Repeated for module number 28					
42B8	...Repeated for module number 29					
42BA	...Repeated for module number 30					
42BC	...Repeated for module number 31					
42BE	...Repeated for module number 32					
42C0	...Repeated for module number 33					
42C2	...Repeated for module number 34					
42C4	...Repeated for module number 35					
42C6	...Repeated for module number 36					
42C8	...Repeated for module number 37					
42CA	...Repeated for module number 38					
42CC	...Repeated for module number 39					
42CE	...Repeated for module number 40					
42D0	...Repeated for module number 41					
42D2	...Repeated for module number 42					
42D4	...Repeated for module number 43					
42D6	...Repeated for module number 44					
42D8	...Repeated for module number 45					
42DA	...Repeated for module number 46					
42DC	...Repeated for module number 47					
42DE	...Repeated for module number 48					
Installation (Read/Write Setting)						
43E0	Relay Programmed State	0 to 1	---	1	F133	0 (Not Programmed)
43E1	Relay Name	---	---	---	F202	"Relay-1"
CT Settings (Read/Write Setting) (6 modules)						
4480	Phase CT Primary	1 to 65000	A	1	F001	1
4481	Phase CT Secondary	0 to 1	---	1	F123	0 (1 A)
4482	Ground CT Primary	1 to 65000	A	1	F001	1
4483	Ground CT Secondary	0 to 1	---	1	F123	0 (1 A)
4484	...Repeated for module number 2					
4488	...Repeated for module number 3					
448C	...Repeated for module number 4					
4490	...Repeated for module number 5					
4494	...Repeated for module number 6					
VT Settings (Read/Write Setting) (3 modules)						
4500	Phase VT Connection	0 to 1	---	1	F100	0 (Wye)
4501	Phase VT Secondary	50 to 240	V	0.1	F001	664
4502	Phase VT Ratio	1 to 24000	:1	1	F060	1
4504	Auxiliary VT Connection	0 to 6	---	1	F166	1 (Vag)
4505	Auxiliary VT Secondary	50 to 240	V	0.1	F001	664
4506	Auxiliary VT Ratio	1 to 24000	:1	1	F060	1
4508	...Repeated for module number 2					

Table B–9: MODBUS MEMORY MAP (Sheet 11 of 28)

ADDR	REGISTER NAME	RANGE	UNITS	STEP	FORMAT	DEFAULT
4510	...Repeated for module number 3					
Source Settings (Read/Write Setting) (6 modules)						
4580	Source Name	---	---	---	F206	"SRC 1 "
4583	Source Phase CT	0 to 63	---	1	F400	0
4584	Source Ground CT	0 to 63	---	1	F400	0
4585	Source Phase VT	0 to 63	---	1	F400	0
4586	Source Auxiliary VT	0 to 63	---	1	F400	0
4587	...Repeated for module number 2					
458E	...Repeated for module number 3					
4595	...Repeated for module number 4					
459C	...Repeated for module number 5					
45A3	...Repeated for module number 6					
Power System (Read/Write Setting)						
4600	Nominal Frequency	25 to 60	Hz	1	F001	60
4601	Phase Rotation	0 to 1	---	1	F106	0 (ABC)
4602	Frequency And Phase Reference	0 to 5	---	1	F167	0 (SRC 1)
4603	Frequency Tracking	0 to 1	---	1	F102	1 (Enabled)
Demand (Read/Write Setting)						
47D0	Demand Current Method	0 to 2	---	1	F139	0 (Thrm Exponential)
47D1	Demand Power Method	0 to 2	---	1	F139	0 (Thrm Exponential)
47D2	Demand Interval	0 to 5	---	1	F132	2 (15 MIN)
47D3	Demand Input	0 to 65535	---	1	F300	0
Demand (Read/Write Command)						
47D4	Demand Clear Record	0 to 1	---	1	F126	0 (No)
Flexcurve A (Read/Write Setting)						
4800	FlexCurve A (120 items)	0 to 65535	ms	1	F011	0
Flexcurve B (Read/Write Setting)						
48F0	FlexCurve B (120 items)	0 to 65535	ms	1	F011	0
Modbus User Map (Read/Write Setting)						
4A00	Modbus Address Settings for User Map (256 items)	0 to 65535	---	1	F001	0
User Displays Settings (Read/Write Setting) (8 modules)						
4C00	User display top line text	---	---	---	F202	" "
4C0A	User display bottom line text	---	---	---	F202	" "
4C14	Modbus addresses of displayed items (5 items)	0 to 65535	---	1	F001	0
4C19	Reserved (7 items)	---	---	---	F001	0
4C20	...Repeated for module number 2					
4C40	...Repeated for module number 3					
4C60	...Repeated for module number 4					
4C80	...Repeated for module number 5					
4CA0	...Repeated for module number 6					
4CC0	...Repeated for module number 7					
4CE0	...Repeated for module number 8					
FlexLogic™ (Read/Write Setting)						
5000	FlexLogic Entry (512 items)	0 to 65535	---	1	F300	16384
FlexLogic™ Timers (Read/Write Setting) (32 modules)						
5800	Timer x Type	0 to 2	---	1	F129	0 (millisecond)
5801	Timer x Pickup Delay	0 to 60000	---	1	F001	0
5802	Timer x Dropout Delay	0 to 60000	---	1	F001	0
5803	Timer x Reserved (5 items)	0 to 65535	---	1	F001	0
5808	...Repeated for module number 2					
5810	...Repeated for module number 3					
5818	...Repeated for module number 4					
5820	...Repeated for module number 5					
5828	...Repeated for module number 6					

B

Table B–9: MODBUS MEMORY MAP (Sheet 12 of 28)

ADDR	REGISTER NAME	RANGE	UNITS	STEP	FORMAT	DEFAULT
5830	...Repeated for module number 7					
5838	...Repeated for module number 8					
5840	...Repeated for module number 9					
5848	...Repeated for module number 10					
5850	...Repeated for module number 11					
5858	...Repeated for module number 12					
5860	...Repeated for module number 13					
5868	...Repeated for module number 14					
5870	...Repeated for module number 15					
5878	...Repeated for module number 16					
5880	...Repeated for module number 17					
5888	...Repeated for module number 18					
5890	...Repeated for module number 19					
5898	...Repeated for module number 20					
58A0	...Repeated for module number 21					
58A8	...Repeated for module number 22					
58B0	...Repeated for module number 23					
58B8	...Repeated for module number 24					
58C0	...Repeated for module number 25					
58C8	...Repeated for module number 26					
58D0	...Repeated for module number 27					
58D8	...Repeated for module number 28					
58E0	...Repeated for module number 29					
58E8	...Repeated for module number 30					
58F0	...Repeated for module number 31					
58F8	...Repeated for module number 32					
Phase TOC (Read/Write Grouped Setting) (6 modules)						
5900	Phase TOC Function	0 to 1	---	1	F102	0 (Disabled)
5901	Phase TOC Signal Source	0 to 5	---	1	F167	0 (SRC 1)
5902	Phase TOC Input	0 to 1	---	1	F122	0 (Phasor)
5903	Phase TOC Pickup	0 to 30	pu	0.001	F001	1000
5904	Phase TOC Curve	0 to 14	---	1	F103	0 (IEEE Mod Inv)
5905	Phase TOC Multiplier	0 to 600	---	0.01	F001	100
5906	Phase TOC Reset	0 to 1	---	1	F104	0 (Instantaneous)
5907	Phase TOC Voltage Restraint	0 to 1	---	1	F102	0 (Disabled)
5908	Phase TOC Block For Each Phase (3 items)	0 to 65535	---	1	F300	0
590B	Phase TOC Target	0 to 2	---	1	F109	0 (Self-reset)
590C	Phase TOC Events	0 to 1	---	1	F102	0 (Disabled)
590D	Reserved (3 items)	0 to 1	---	1	F001	0
5910	...Repeated for module number 2					
5920	...Repeated for module number 3					
5930	...Repeated for module number 4					
5940	...Repeated for module number 5					
5950	...Repeated for module number 6					
Phase IOC (Read/Write Grouped Setting) (12 modules)						
5A00	Phase IOC1 Function	0 to 1	---	1	F102	0 (Disabled)
5A01	Phase IOC1 Signal Source	0 to 5	---	1	F167	0 (SRC 1)
5A02	Phase IOC1 Pickup	0 to 30	pu	0.001	F001	1000
5A03	Phase IOC1 Delay	0 to 600	s	0.01	F001	0
5A04	Phase IOC1 Reset Delay	0 to 600	s	0.01	F001	0
5A05	Phase IOC1 Block For Each Phase (3 items)	0 to 65535	---	1	F300	0
5A08	Phase IOC1 Target	0 to 2	---	1	F109	0 (Self-reset)
5A09	Phase IOC1 Events	0 to 1	---	1	F102	0 (Disabled)
5A0A	Reserved (6 items)	0 to 1	---	1	F001	0

Table B–9: MODBUS MEMORY MAP (Sheet 13 of 28)

ADDR	REGISTER NAME	RANGE	UNITS	STEP	FORMAT	DEFAULT
5A10	...Repeated for module number 2					
5A20	...Repeated for module number 3					
5A30	...Repeated for module number 4					
5A40	...Repeated for module number 5					
5A50	...Repeated for module number 6					
5A60	...Repeated for module number 7					
5A70	...Repeated for module number 8					
5A80	...Repeated for module number 9					
5A90	...Repeated for module number 10					
5AA0	...Repeated for module number 11					
5AB0	...Repeated for module number 12					
Neutral TOC (Read/Write Grouped Setting) (6 modules)						
5B00	Neutral TOC1 Function	0 to 1	---	1	F102	0 (Disabled)
5B01	Neutral TOC1 Signal Source	0 to 5	---	1	F167	0 (SRC 1)
5B02	Neutral TOC1 Input	0 to 1	---	1	F122	0 (Phasor)
5B03	Neutral TOC1 Pickup	0 to 30	pu	0.001	F001	1000
5B04	Neutral TOC1 Curve	0 to 14	---	1	F103	0 (IEEE Mod Inv)
5B05	Neutral TOC1 Multiplier	0 to 600	---	0.01	F001	100
5B06	Neutral TOC1 Reset	0 to 1	---	1	F104	0 (Instantaneous)
5B07	Neutral TOC1 Block	0 to 65535	---	1	F300	0
5B08	Neutral TOC1 Target	0 to 2	---	1	F109	0 (Self-reset)
5B09	Neutral TOC1 Events	0 to 1	---	1	F102	0 (Disabled)
5B0A	Reserved (6 items)	0 to 1	---	1	F001	0
5B10	...Repeated for module number 2					
5B20	...Repeated for module number 3					
5B30	...Repeated for module number 4					
5B40	...Repeated for module number 5					
5B50	...Repeated for module number 6					
Neutral IOC (Read/Write Grouped Setting) (12 modules)						
5C00	Neutral IOC1 Function	0 to 1	---	1	F102	0 (Disabled)
5C01	Neutral IOC1 Signal Source	0 to 5	---	1	F167	0 (SRC 1)
5C02	Neutral IOC1 Pickup	0 to 30	pu	0.001	F001	1000
5C03	Neutral IOC1 Delay	0 to 600	s	0.01	F001	0
5C04	Neutral IOC1 Reset Delay	0 to 600	s	0.01	F001	0
5C05	Neutral IOC1 Block	0 to 65535	---	1	F300	0
5C06	Neutral IOC1 Target	0 to 2	---	1	F109	0 (Self-reset)
5C07	Neutral IOC1 Events	0 to 1	---	1	F102	0 (Disabled)
5C08	Reserved (8 items)	0 to 1	---	1	F001	0
5C10	...Repeated for module number 2					
5C20	...Repeated for module number 3					
5C30	...Repeated for module number 4					
5C40	...Repeated for module number 5					
5C50	...Repeated for module number 6					
5C60	...Repeated for module number 7					
5C70	...Repeated for module number 8					
5C80	...Repeated for module number 9					
5C90	...Repeated for module number 10					
5CA0	...Repeated for module number 11					
5CB0	...Repeated for module number 12					
Ground TOC (Read/Write Grouped Setting) (6 modules)						
5D00	Ground TOC1 Function	0 to 1	---	1	F102	0 (Disabled)
5D01	Ground TOC1 Signal Source	0 to 5	---	1	F167	0 (SRC 1)
5D02	Ground TOC1 Input	0 to 1	---	1	F122	0 (Phasor)
5D03	Ground TOC1 Pickup	0 to 30	pu	0.001	F001	1000

B

Table B–9: MODBUS MEMORY MAP (Sheet 14 of 28)

ADDR	REGISTER NAME	RANGE	UNITS	STEP	FORMAT	DEFAULT
5D04	Ground TOC1 Curve	0 to 14	---	1	F103	0 (IEEE Mod Inv)
5D05	Ground TOC1 Multiplier	0 to 600	---	0.01	F001	100
5D06	Ground TOC1 Reset	0 to 1	---	1	F104	0 (Instantaneous)
5D07	Ground TOC1 Block	0 to 65535	---	1	F300	0
5D08	Ground TOC1 Target	0 to 2	---	1	F109	0 (Self-reset)
5D09	Ground TOC1 Events	0 to 1	---	1	F102	0 (Disabled)
5D0A	Reserved (6 items)	0 to 1	---	1	F001	0
5D10	...Repeated for module number 2					
5D20	...Repeated for module number 3					
5D30	...Repeated for module number 4					
5D40	...Repeated for module number 5					
5D50	...Repeated for module number 6					
Ground IOC (Read/Write Grouped Setting) (12 modules)						
5E00	Ground IOC1 Signal Source	0 to 5	---	1	F167	0 (SRC 1)
5E01	Ground IOC1 Function	0 to 1	---	1	F102	0 (Disabled)
5E02	Ground IOC1 Pickup	0 to 30	pu	0.001	F001	1000
5E03	Ground IOC1 Delay	0 to 600	s	0.01	F001	0
5E04	Ground IOC1 Reset Delay	0 to 600	s	0.01	F001	0
5E05	Ground IOC1 Block	0 to 65535	---	1	F300	0
5E06	Ground IOC1 Target	0 to 2	---	1	F109	0 (Self-reset)
5E07	Ground IOC1 Events	0 to 1	---	1	F102	0 (Disabled)
5E08	Reserved (8 items)	0 to 1	---	1	F001	0
5E10	...Repeated for module number 2					
5E20	...Repeated for module number 3					
5E30	...Repeated for module number 4					
5E40	...Repeated for module number 5					
5E50	...Repeated for module number 6					
5E60	...Repeated for module number 7					
5E70	...Repeated for module number 8					
5E80	...Repeated for module number 9					
5E90	...Repeated for module number 10					
5EA0	...Repeated for module number 11					
5EB0	...Repeated for module number 12					
Autoreclose (Read/Write Setting) (6 modules)						
6240	Autoreclose Function	0 to 1	---	1	F102	0 (Disabled)
6241	Autoreclose Initiate	0 to 65535	---	1	F300	0
6242	Autoreclose Block	0 to 65535	---	1	F300	0
6243	Autoreclose Max Number of Shots	1 to 4	---	1	F001	1
6244	Autoreclose Manual Close	0 to 65535	---	1	F300	0
6245	Autoreclose Manual Reset from LO	0 to 65535	---	1	F300	0
6246	Autoreclose Reset Lockout if Breaker Closed	0 to 1	---	1	F108	0 (Off)
6247	Autoreclose Reset Lockout On Manual Close	0 to 1	---	1	F108	0 (Off)
6248	Autoreclose Breaker Closed	0 to 65535	---	1	F300	0
6249	Autoreclose Breaker Open	0 to 65535	---	1	F300	0
624A	Autoreclose Block Time Upon Manual Close	0 to 655.35	s	0.01	F001	1000
624B	Autoreclose Dead Time Shot 1	0 to 655.35	s	0.01	F001	100
624C	Autoreclose Dead Time Shot 2	0 to 655.35	s	0.01	F001	200
624D	Autoreclose Dead Time Shot 3	0 to 655.35	s	0.01	F001	300
624E	Autoreclose Dead Time Shot 4	0 to 655.35	s	0.01	F001	400
624F	Autoreclose Reset Lockout Delay	0 to 655.35	---	0.01	F001	6000
6250	Autoreclose Reset Time	0 to 655.35	s	0.01	F001	6000
6251	Autoreclose Incomplete Sequence Time	0 to 655.35	s	0.01	F001	500
6252	Autoreclose Events	0 to 1	---	1	F102	0 (Disabled)
6253	Autoreclose Reduce Max 1	0 to 65535	---	1	F300	0

Table B–9: MODBUS MEMORY MAP (Sheet 15 of 28)

ADDR	REGISTER NAME	RANGE	UNITS	STEP	FORMAT	DEFAULT
6254	Autoreclose Reduce Max 2	0 to 65535	---	1	F300	0
6255	Autoreclose Reduce Max 3	0 to 65535	---	1	F300	0
6256	Autoreclose Add Delay 1	0 to 65535	---	1	F300	0
6257	Autoreclose Delay 1	0 to 655.35	s	0.01	F001	0
6258	Autoreclose Add Delay 2	0 to 65535	---	1	F300	0
6259	Autoreclose Delay 2	0 to 655.35	s	0.01	F001	0
625A	Autoreclose Reserved (4 items)	0 to 0.001	---	0.001	F001	0
625E	...Repeated for module number 2					
627C	...Repeated for module number 3					
629A	...Repeated for module number 4					
62B8	...Repeated for module number 5					
62D6	...Repeated for module number 6					
Phase Undervoltage (Read/Write Grouped Setting) (2 modules)						
7000	Phase UV1 Function	0 to 1	---	1	F102	0 (Disabled)
7001	Phase UV1 Signal Source	0 to 5	---	1	F167	0 (SRC 1)
7002	Phase UV1 Pickup	0 to 3	pu	0.001	F001	1000
7003	Phase UV1 Curve	0 to 1	---	1	F111	0 (Definite Time)
7004	Phase UV1 Delay	0 to 600	s	0.01	F001	100
7005	Phase UV1 Minimum Voltage	0 to 3	pu	0.001	F001	100
7006	Phase UV1 Block	0 to 65535	---	1	F300	0
7007	Phase UV1 Target	0 to 2	---	1	F109	0 (Self-reset)
7008	Phase UV1 Events	0 to 1	---	1	F102	0 (Disabled)
7009	Phase UV Measurement Mode	0 to 1	---	1	F186	0 (Phase to Ground)
700A	Reserved (6 items)	0 to 1	---	1	F001	0
7010	...Repeated for module number 2					
DCMA Inputs (Read/Write Setting) (24 modules)						
7300	DCMA Inputs x Function	0 to 1	---	1	F102	0 (Disabled)
7301	DCMA Inputs x ID	---	---	---	F205	"DCMA Ip 1 "
7307	DCMA Inputs x Reserved 1 (4 items)	0 to 65535	---	1	F001	0
730B	DCMA Inputs x Units	---	---	---	F206	"mA"
730E	DCMA Inputs x Range	0 to 6	---	1	F173	6 (4 to 20 mA)
730F	DCMA Inputs x Minimum Value	-9999.999 to 9999.999	---	0.001	F004	4000
7311	DCMA Inputs x Maximum Value	-9999.999 to 9999.999	---	0.001	F004	20000
7313	DCMA Inputs x Reserved (5 items)	0 to 65535	---	1	F001	0
7318	...Repeated for module number 2					
7330	...Repeated for module number 3					
7348	...Repeated for module number 4					
7360	...Repeated for module number 5					
7378	...Repeated for module number 6					
7390	...Repeated for module number 7					
73A8	...Repeated for module number 8					
73C0	...Repeated for module number 9					
73D8	...Repeated for module number 10					
73F0	...Repeated for module number 11					
7408	...Repeated for module number 12					
7420	...Repeated for module number 13					
7438	...Repeated for module number 14					
7450	...Repeated for module number 15					
7468	...Repeated for module number 16					
7480	...Repeated for module number 17					
7498	...Repeated for module number 18					
74B0	...Repeated for module number 19					
74C8	...Repeated for module number 20					
74E0	...Repeated for module number 21					

B

Table B–9: MODBUS MEMORY MAP (Sheet 16 of 28)

ADDR	REGISTER NAME	RANGE	UNITS	STEP	FORMAT	DEFAULT
74F8	...Repeated for module number 22					
7510	...Repeated for module number 23					
7528	...Repeated for module number 24					
RTD Inputs (Read/Write Setting) (48 modules)						
7540	RTD Inputs x Function	0 to 1	---	1	F102	0 (Disabled)
7541	RTD Inputs x ID	---	---	---	F205	"RTD Ip 1 "
7547	RTD Inputs x Reserved 1 (4 items)	0 to 65535	---	1	F001	0
754B	RTD Inputs x Type	0 to 3	---	1	F174	0 (100 Ω Platinum)
754C	RTD Inputs x Reserved 2 (4 items)	0 to 65535	---	1	F001	0
7550	...Repeated for module number 2					
7560	...Repeated for module number 3					
7570	...Repeated for module number 4					
7580	...Repeated for module number 5					
7590	...Repeated for module number 6					
75A0	...Repeated for module number 7					
75B0	...Repeated for module number 8					
75C0	...Repeated for module number 9					
75D0	...Repeated for module number 10					
75E0	...Repeated for module number 11					
75F0	...Repeated for module number 12					
7600	...Repeated for module number 13					
7610	...Repeated for module number 14					
7620	...Repeated for module number 15					
7630	...Repeated for module number 16					
7640	...Repeated for module number 17					
7650	...Repeated for module number 18					
7660	...Repeated for module number 19					
7670	...Repeated for module number 20					
7680	...Repeated for module number 21					
7690	...Repeated for module number 22					
76A0	...Repeated for module number 23					
76B0	...Repeated for module number 24					
76C0	...Repeated for module number 25					
76D0	...Repeated for module number 26					
76E0	...Repeated for module number 27					
76F0	...Repeated for module number 28					
7700	...Repeated for module number 29					
7710	...Repeated for module number 30					
7720	...Repeated for module number 31					
7730	...Repeated for module number 32					
7740	...Repeated for module number 33					
7750	...Repeated for module number 34					
7760	...Repeated for module number 35					
7770	...Repeated for module number 36					
7780	...Repeated for module number 37					
7790	...Repeated for module number 38					
77A0	...Repeated for module number 39					
77B0	...Repeated for module number 40					
77C0	...Repeated for module number 41					
77D0	...Repeated for module number 42					
77E0	...Repeated for module number 43					
77F0	...Repeated for module number 44					
7800	...Repeated for module number 45					
7810	...Repeated for module number 46					

Table B–9: MODBUS MEMORY MAP (Sheet 17 of 28)

ADDR	REGISTER NAME	RANGE	UNITS	STEP	FORMAT	DEFAULT
7820	...Repeated for module number 47					
7830	...Repeated for module number 48					
Ohm Inputs (Read/Write Setting) (2 modules)						
7840	Ohm Inputs x Function	0 to 1	---	1	F102	0 (Disabled)
7841	Ohm Inputs x ID	---	---	---	F205	"Ohm Ip 1 "
7847	Ohm Inputs x Reserved (9 items)	0 to 65535	---	1	F001	0
7850	...Repeated for module number 2					
Underfrequency (Read/Write Setting) (6 modules)						
7E00	Underfrequency Function	0 to 1	---	1	F102	0 (Disabled)
7E01	Underfrequency Block	0 to 65535	---	1	F300	0
7E02	Min Current	0.1 to 1.25	pu	0.01	F001	10
7E03	Underfrequency Pickup	20 to 65	Hz	0.01	F001	5950
7E04	Pickup Delay	0 to 65.535	s	0.001	F001	2000
7E05	Reset Delay	0 to 65.535	s	0.001	F001	2000
7E06	Underfrequency Source	0 to 5	---	1	F167	0 (SRC 1)
7E07	Underfrequency Events	0 to 1	---	1	F102	0 (Disabled)
7E08	Underfrequency Target	0 to 2	---	1	F109	0 (Self-reset)
7E09	Underfrequency X Reserved (8 items)	0 to 1	---	1	F001	0
7E11	...Repeated for module number 2					
7E22	...Repeated for module number 3					
7E33	...Repeated for module number 4					
7E44	...Repeated for module number 5					
7E55	...Repeated for module number 6					
Frequency (Read Only)						
8000	Tracking Frequency	2 to 90	Hz	0.01	F001	0
FlexState Settings (Read/Write Setting)						
8800	FlexState Parameters (256 items)	---	---	---	F300	0
FlexElement (Read/Write Setting) (16 modules)						
9000	FlexElement Function	0 to 1	---	1	F102	0 (Disabled)
9001	FlexElement Name	---	---	---	F206	"FxE \x040"
9004	FlexElement InputP	0 to 65535	---	1	F600	0
9005	FlexElement InputM	0 to 65535	---	1	F600	0
9006	FlexElement Compare	0 to 1	---	1	F516	0 (LEVEL)
9007	FlexElement Input	0 to 1	---	1	F515	0 (SIGNED)
9008	FlexElement Direction	0 to 1	---	1	F517	0 (OVER)
9009	FlexElement Hysteresis	0.1 to 50	%	0.1	F001	30
900A	FlexElement Pickup	-90 to 90	pu	0.001	F004	1000
900C	FlexElement DeltaT Units	0 to 2	---	1	F518	0 (Milliseconds)
900D	FlexElement DeltaT	20 to 86400	---	1	F003	20
900F	FlexElement Pkp Delay	0 to 65.535	s	0.001	F001	0
9010	FlexElement Rst Delay	0 to 65.535	s	0.001	F001	0
9011	FlexElement Block	0 to 65535	---	1	F300	0
9012	FlexElement Target	0 to 2	---	1	F109	0 (Self-reset)
9013	FlexElement Events	0 to 1	---	1	F102	0 (Disabled)
9014	...Repeated for module number 2					
9028	...Repeated for module number 3					
903C	...Repeated for module number 4					
9050	...Repeated for module number 5					
9064	...Repeated for module number 6					
9078	...Repeated for module number 7					
908C	...Repeated for module number 8					
90A0	...Repeated for module number 9					
90B4	...Repeated for module number 10					
90C8	...Repeated for module number 11					

B

Table B–9: MODBUS MEMORY MAP (Sheet 18 of 28)

ADDR	REGISTER NAME	RANGE	UNITS	STEP	FORMAT	DEFAULT
90DC	...Repeated for module number 12					
90F0	...Repeated for module number 13					
9104	...Repeated for module number 14					
9118	...Repeated for module number 15					
912C	...Repeated for module number 16					
FlexElement Actuals (Read Only) (16 modules)						
9A01	FlexElement Actual	-2147483.647 to 2147483.647	---	0.001	F004	0
9A03	...Repeated for module number 2					
9A05	...Repeated for module number 3					
9A07	...Repeated for module number 4					
9A09	...Repeated for module number 5					
9A0B	...Repeated for module number 6					
9A0D	...Repeated for module number 7					
9A0F	...Repeated for module number 8					
9A11	...Repeated for module number 9					
9A13	...Repeated for module number 10					
9A15	...Repeated for module number 11					
9A17	...Repeated for module number 12					
9A19	...Repeated for module number 13					
9A1B	...Repeated for module number 14					
9A1D	...Repeated for module number 15					
9A1F	...Repeated for module number 16					
Setting Groups (Read/Write Setting)						
A000	Setting Group for Modbus Comm (0 means group 1)	0 to 7	---	1	F001	0
A001	Setting Groups Block	0 to 65535	---	1	F300	0
A002	FlexLogic Operands to Activate Grps 2 to 8 (7 items)	0 to 65535	---	1	F300	0
A009	Setting Group Function	0 to 1	---	1	F102	0 (Disabled)
A00A	Setting Group Events	0 to 1	---	1	F102	0 (Disabled)
Setting Groups (Read Only)						
A00B	Current Setting Group	0 to 7	---	1	F001	0
Digital Elements (Read/Write Setting) (16 modules)						
B000	Digital Element x Function	0 to 1	---	1	F102	0 (Disabled)
B001	Digital Element x Name	---	---	---	F203	"Dig Element 1 "
B015	Digital Element x Input	0 to 65535	---	1	F300	0
B016	Digital Element x Pickup Delay	0 to 999999.999	s	0.001	F003	0
B018	Digital Element x Reset Delay	0 to 999999.999	s	0.001	F003	0
B01A	Digital Element x Block	0 to 65535	---	1	F300	0
B01B	Digital Element x Target	0 to 2	---	1	F109	0 (Self-reset)
B01C	Digital Element x Events	0 to 1	---	1	F102	0 (Disabled)
B01D	Digital Element x Reserved (3 items)	---	---	---	F001	0
B020	...Repeated for module number 2					
B040	...Repeated for module number 3					
B060	...Repeated for module number 4					
B080	...Repeated for module number 5					
B0A0	...Repeated for module number 6					
B0C0	...Repeated for module number 7					
B0E0	...Repeated for module number 8					
B100	...Repeated for module number 9					
B120	...Repeated for module number 10					
B140	...Repeated for module number 11					
B160	...Repeated for module number 12					
B180	...Repeated for module number 13					
B1A0	...Repeated for module number 14					

Table B–9: MODBUS MEMORY MAP (Sheet 19 of 28)

ADDR	REGISTER NAME	RANGE	UNITS	STEP	FORMAT	DEFAULT
B1C0	...Repeated for module number 15					
B1E0	...Repeated for module number 16					
Contact Inputs (Read/Write Setting) (96 modules)						
C000	Contact Input x Name	---	---	---	F205	"Cont Ip 1 "
C006	Contact Input x Events	0 to 1	---	1	F102	0 (Disabled)
C007	Contact Input x Debounce Time	0 to 16	ms	0.5	F001	20
C008	...Repeated for module number 2					
C010	...Repeated for module number 3					
C018	...Repeated for module number 4					
C020	...Repeated for module number 5					
C028	...Repeated for module number 6					
C030	...Repeated for module number 7					
C038	...Repeated for module number 8					
C040	...Repeated for module number 9					
C048	...Repeated for module number 10					
C050	...Repeated for module number 11					
C058	...Repeated for module number 12					
C060	...Repeated for module number 13					
C068	...Repeated for module number 14					
C070	...Repeated for module number 15					
C078	...Repeated for module number 16					
C080	...Repeated for module number 17					
C088	...Repeated for module number 18					
C090	...Repeated for module number 19					
C098	...Repeated for module number 20					
C0A0	...Repeated for module number 21					
C0A8	...Repeated for module number 22					
C0B0	...Repeated for module number 23					
C0B8	...Repeated for module number 24					
C0C0	...Repeated for module number 25					
C0C8	...Repeated for module number 26					
C0D0	...Repeated for module number 27					
C0D8	...Repeated for module number 28					
C0E0	...Repeated for module number 29					
C0E8	...Repeated for module number 30					
C0F0	...Repeated for module number 31					
C0F8	...Repeated for module number 32					
C100	...Repeated for module number 33					
C108	...Repeated for module number 34					
C110	...Repeated for module number 35					
C118	...Repeated for module number 36					
C120	...Repeated for module number 37					
C128	...Repeated for module number 38					
C130	...Repeated for module number 39					
C138	...Repeated for module number 40					
C140	...Repeated for module number 41					
C148	...Repeated for module number 42					
C150	...Repeated for module number 43					
C158	...Repeated for module number 44					
C160	...Repeated for module number 45					
C168	...Repeated for module number 46					
C170	...Repeated for module number 47					
C178	...Repeated for module number 48					
C180	...Repeated for module number 49					

B

Table B–9: MODBUS MEMORY MAP (Sheet 20 of 28)

ADDR	REGISTER NAME	RANGE	UNITS	STEP	FORMAT	DEFAULT
C188	...Repeated for module number 50					
C190	...Repeated for module number 51					
C198	...Repeated for module number 52					
C1A0	...Repeated for module number 53					
C1A8	...Repeated for module number 54					
C1B0	...Repeated for module number 55					
C1B8	...Repeated for module number 56					
C1C0	...Repeated for module number 57					
C1C8	...Repeated for module number 58					
C1D0	...Repeated for module number 59					
C1D8	...Repeated for module number 60					
C1E0	...Repeated for module number 61					
C1E8	...Repeated for module number 62					
C1F0	...Repeated for module number 63					
C1F8	...Repeated for module number 64					
C200	...Repeated for module number 65					
C208	...Repeated for module number 66					
C210	...Repeated for module number 67					
C218	...Repeated for module number 68					
C220	...Repeated for module number 69					
C228	...Repeated for module number 70					
C230	...Repeated for module number 71					
C238	...Repeated for module number 72					
C240	...Repeated for module number 73					
C248	...Repeated for module number 74					
C250	...Repeated for module number 75					
C258	...Repeated for module number 76					
C260	...Repeated for module number 77					
C268	...Repeated for module number 78					
C270	...Repeated for module number 79					
C278	...Repeated for module number 80					
C280	...Repeated for module number 81					
C288	...Repeated for module number 82					
C290	...Repeated for module number 83					
C298	...Repeated for module number 84					
C2A0	...Repeated for module number 85					
C2A8	...Repeated for module number 86					
C2B0	...Repeated for module number 87					
C2B8	...Repeated for module number 88					
C2C0	...Repeated for module number 89					
C2C8	...Repeated for module number 90					
C2D0	...Repeated for module number 91					
C2D8	...Repeated for module number 92					
C2E0	...Repeated for module number 93					
C2E8	...Repeated for module number 94					
C2F0	...Repeated for module number 95					
C2F8	...Repeated for module number 96					
Contact Input Thresholds (Read/Write Setting)						
C600	Contact Input x Threshold (24 items)	0 to 3	---	1	F128	1 (33 Vdc)
Virtual Inputs Global Settings (Read/Write Setting)						
C680	Virtual Inputs SBO Timeout	1 to 60	s	1	F001	30
Virtual Inputs (Read/Write Setting) (32 modules)						
C690	Virtual Input x Function	0 to 1	---	1	F102	0 (Disabled)
C691	Virtual Input x Name	---	---	---	F205	"Virt Ip 1 "

Table B–9: MODBUS MEMORY MAP (Sheet 21 of 28)

ADDR	REGISTER NAME	RANGE	UNITS	STEP	FORMAT	DEFAULT
C69B	Virtual Input x Programmed Type	0 to 1	---	1	F127	0 (Latched)
C69C	Virtual Input x Events	0 to 1	---	1	F102	0 (Disabled)
C69D	Virtual Input x UCA SBOClass	1 to 2	---	1	F001	1
C69E	Virtual Input x UCA SBOEna	0 to 1	---	1	F102	0 (Disabled)
C69F	Virtual Input x Reserved	---	---	---	F001	0
C6A0	...Repeated for module number 2					
C6B0	...Repeated for module number 3					
C6C0	...Repeated for module number 4					
C6D0	...Repeated for module number 5					
C6E0	...Repeated for module number 6					
C6F0	...Repeated for module number 7					
C700	...Repeated for module number 8					
C710	...Repeated for module number 9					
C720	...Repeated for module number 10					
C730	...Repeated for module number 11					
C740	...Repeated for module number 12					
C750	...Repeated for module number 13					
C760	...Repeated for module number 14					
C770	...Repeated for module number 15					
C780	...Repeated for module number 16					
C790	...Repeated for module number 17					
C7A0	...Repeated for module number 18					
C7B0	...Repeated for module number 19					
C7C0	...Repeated for module number 20					
C7D0	...Repeated for module number 21					
C7E0	...Repeated for module number 22					
C7F0	...Repeated for module number 23					
C800	...Repeated for module number 24					
C810	...Repeated for module number 25					
C820	...Repeated for module number 26					
C830	...Repeated for module number 27					
C840	...Repeated for module number 28					
C850	...Repeated for module number 29					
C860	...Repeated for module number 30					
C870	...Repeated for module number 31					
C880	...Repeated for module number 32					
Virtual Outputs (Read/Write Setting) (64 modules)						
CC90	Virtual Output x Name	---	---	---	F205	"Virt Op 1 "
CC9A	Virtual Output x Events	0 to 1	---	1	F102	0 (Disabled)
CC9B	Virtual Output x Reserved (5 items)	---	---	---	F001	0
CCA0	...Repeated for module number 2					
CCB0	...Repeated for module number 3					
CCC0	...Repeated for module number 4					
CCD0	...Repeated for module number 5					
CCE0	...Repeated for module number 6					
CCF0	...Repeated for module number 7					
CD00	...Repeated for module number 8					
CD10	...Repeated for module number 9					
CD20	...Repeated for module number 10					
CD30	...Repeated for module number 11					
CD40	...Repeated for module number 12					
CD50	...Repeated for module number 13					
CD60	...Repeated for module number 14					
CD70	...Repeated for module number 15					

B

Table B–9: MODBUS MEMORY MAP (Sheet 22 of 28)

ADDR	REGISTER NAME	RANGE	UNITS	STEP	FORMAT	DEFAULT
CD80	...Repeated for module number 16					
CD90	...Repeated for module number 17					
CDA0	...Repeated for module number 18					
CDB0	...Repeated for module number 19					
CDC0	...Repeated for module number 20					
CDD0	...Repeated for module number 21					
CDE0	...Repeated for module number 22					
CDF0	...Repeated for module number 23					
CE00	...Repeated for module number 24					
CE10	...Repeated for module number 25					
CE20	...Repeated for module number 26					
CE30	...Repeated for module number 27					
CE40	...Repeated for module number 28					
CE50	...Repeated for module number 29					
CE60	...Repeated for module number 30					
CE70	...Repeated for module number 31					
CE80	...Repeated for module number 32					
CE90	...Repeated for module number 33					
CEA0	...Repeated for module number 34					
CEB0	...Repeated for module number 35					
CEC0	...Repeated for module number 36					
CED0	...Repeated for module number 37					
CEE0	...Repeated for module number 38					
CEF0	...Repeated for module number 39					
CF00	...Repeated for module number 40					
CF10	...Repeated for module number 41					
CF20	...Repeated for module number 42					
CF30	...Repeated for module number 43					
CF40	...Repeated for module number 44					
CF50	...Repeated for module number 45					
CF60	...Repeated for module number 46					
CF70	...Repeated for module number 47					
CF80	...Repeated for module number 48					
CF90	...Repeated for module number 49					
CFA0	...Repeated for module number 50					
CFB0	...Repeated for module number 51					
CFC0	...Repeated for module number 52					
CFD0	...Repeated for module number 53					
CFE0	...Repeated for module number 54					
CFF0	...Repeated for module number 55					
D000	...Repeated for module number 56					
D010	...Repeated for module number 57					
D020	...Repeated for module number 58					
D030	...Repeated for module number 59					
D040	...Repeated for module number 60					
D050	...Repeated for module number 61					
D060	...Repeated for module number 62					
D070	...Repeated for module number 63					
D080	...Repeated for module number 64					
Mandatory (Read/Write Setting)						
D280	Test Mode Function	0 to 1	---	1	F102	0 (Disabled)
Contact Outputs (Read/Write Setting) (64 modules)						
D290	Contact Output x Name	---	---	---	F205	"Cont Op 1 "
D29A	Contact Output x Operation	0 to 65535	---	1	F300	0

Table B–9: MODBUS MEMORY MAP (Sheet 23 of 28)

ADDR	REGISTER NAME	RANGE	UNITS	STEP	FORMAT	DEFAULT
D29B	Contact Output x Seal-In	0 to 65535	---	1	F300	0
D29C	Reserved	---	---	1	F001	0
D29D	Contact Output x Events	0 to 1	---	1	F102	1 (Enabled)
D29E	Reserved (2 items)	---	---	---	F001	0
D2A0	...Repeated for module number 2					
D2B0	...Repeated for module number 3					
D2C0	...Repeated for module number 4					
D2D0	...Repeated for module number 5					
D2E0	...Repeated for module number 6					
D2F0	...Repeated for module number 7					
D300	...Repeated for module number 8					
D310	...Repeated for module number 9					
D320	...Repeated for module number 10					
D330	...Repeated for module number 11					
D340	...Repeated for module number 12					
D350	...Repeated for module number 13					
D360	...Repeated for module number 14					
D370	...Repeated for module number 15					
D380	...Repeated for module number 16					
D390	...Repeated for module number 17					
D3A0	...Repeated for module number 18					
D3B0	...Repeated for module number 19					
D3C0	...Repeated for module number 20					
D3D0	...Repeated for module number 21					
D3E0	...Repeated for module number 22					
D3F0	...Repeated for module number 23					
D400	...Repeated for module number 24					
D410	...Repeated for module number 25					
D420	...Repeated for module number 26					
D430	...Repeated for module number 27					
D440	...Repeated for module number 28					
D450	...Repeated for module number 29					
D460	...Repeated for module number 30					
D470	...Repeated for module number 31					
D480	...Repeated for module number 32					
D490	...Repeated for module number 33					
D4A0	...Repeated for module number 34					
D4B0	...Repeated for module number 35					
D4C0	...Repeated for module number 36					
D4D0	...Repeated for module number 37					
D4E0	...Repeated for module number 38					
D4F0	...Repeated for module number 39					
D500	...Repeated for module number 40					
D510	...Repeated for module number 41					
D520	...Repeated for module number 42					
D530	...Repeated for module number 43					
D540	...Repeated for module number 44					
D550	...Repeated for module number 45					
D560	...Repeated for module number 46					
D570	...Repeated for module number 47					
D580	...Repeated for module number 48					
D590	...Repeated for module number 49					
D5A0	...Repeated for module number 50					
D5B0	...Repeated for module number 51					

B

Table B–9: MODBUS MEMORY MAP (Sheet 24 of 28)

ADDR	REGISTER NAME	RANGE	UNITS	STEP	FORMAT	DEFAULT
D5C0	...Repeated for module number 52					
D5D0	...Repeated for module number 53					
D5E0	...Repeated for module number 54					
D5F0	...Repeated for module number 55					
D600	...Repeated for module number 56					
D610	...Repeated for module number 57					
D620	...Repeated for module number 58					
D630	...Repeated for module number 59					
D640	...Repeated for module number 60					
D650	...Repeated for module number 61					
D660	...Repeated for module number 62					
D670	...Repeated for module number 63					
D680	...Repeated for module number 64					
Reset (Read/Write Setting)						
D800	FlexLogic operand which initiates a reset	0 to 65535	---	1	F300	0
Force Contact Inputs (Read/Write Setting)						
D8B0	Force Contact Input x State (96 items)	0 to 2	---	1	F144	0 (Disabled)
Force Contact Outputs (Read/Write Setting)						
D910	Force Contact Output x State (64 items)	0 to 3	---	1	F131	0 (Disabled)
Remote Devices (Read/Write Setting) (16 modules)						
E000	Remote Device x ID	---	---	---	F202	"Remote Device 1 "
E00A	...Repeated for module number 2					
E014	...Repeated for module number 3					
E01E	...Repeated for module number 4					
E028	...Repeated for module number 5					
E032	...Repeated for module number 6					
E03C	...Repeated for module number 7					
E046	...Repeated for module number 8					
E050	...Repeated for module number 9					
E05A	...Repeated for module number 10					
E064	...Repeated for module number 11					
E06E	...Repeated for module number 12					
E078	...Repeated for module number 13					
E082	...Repeated for module number 14					
E08C	...Repeated for module number 15					
E096	...Repeated for module number 16					
Remote Inputs (Read/Write Setting) (32 modules)						
E100	Remote Input x Device	1 to 16	---	1	F001	1
E101	Remote Input x Bit Pair	0 to 64	---	1	F156	0 (None)
E102	Remote Input x Default State	0 to 1	---	1	F108	0 (Off)
E103	Remote Input x Events	0 to 1	---	1	F102	0 (Disabled)
E104	...Repeated for module number 2					
E108	...Repeated for module number 3					
E10C	...Repeated for module number 4					
E110	...Repeated for module number 5					
E114	...Repeated for module number 6					
E118	...Repeated for module number 7					
E11C	...Repeated for module number 8					
E120	...Repeated for module number 9					
E124	...Repeated for module number 10					
E128	...Repeated for module number 11					
E12C	...Repeated for module number 12					
E130	...Repeated for module number 13					
E134	...Repeated for module number 14					

Table B–9: MODBUS MEMORY MAP (Sheet 25 of 28)

ADDR	REGISTER NAME	RANGE	UNITS	STEP	FORMAT	DEFAULT
E138	...Repeated for module number 15					
E13C	...Repeated for module number 16					
E140	...Repeated for module number 17					
E144	...Repeated for module number 18					
E148	...Repeated for module number 19					
E14C	...Repeated for module number 20					
E150	...Repeated for module number 21					
E154	...Repeated for module number 22					
E158	...Repeated for module number 23					
E15C	...Repeated for module number 24					
E160	...Repeated for module number 25					
E164	...Repeated for module number 26					
E168	...Repeated for module number 27					
E16C	...Repeated for module number 28					
E170	...Repeated for module number 29					
E174	...Repeated for module number 30					
E178	...Repeated for module number 31					
E17C	...Repeated for module number 32					
Remote Output DNA Pairs (Read/Write Setting) (32 modules)						
E600	Remote Output DNA x Operand	0 to 65535	---	1	F300	0
E601	Remote Output DNA x Events	0 to 1	---	1	F102	0 (Disabled)
E602	Remote Output DNA x Reserved (2 items)	0 to 1	---	1	F001	0
E604	...Repeated for module number 2					
E608	...Repeated for module number 3					
E60C	...Repeated for module number 4					
E610	...Repeated for module number 5					
E614	...Repeated for module number 6					
E618	...Repeated for module number 7					
E61C	...Repeated for module number 8					
E620	...Repeated for module number 9					
E624	...Repeated for module number 10					
E628	...Repeated for module number 11					
E62C	...Repeated for module number 12					
E630	...Repeated for module number 13					
E634	...Repeated for module number 14					
E638	...Repeated for module number 15					
E63C	...Repeated for module number 16					
E640	...Repeated for module number 17					
E644	...Repeated for module number 18					
E648	...Repeated for module number 19					
E64C	...Repeated for module number 20					
E650	...Repeated for module number 21					
E654	...Repeated for module number 22					
E658	...Repeated for module number 23					
E65C	...Repeated for module number 24					
E660	...Repeated for module number 25					
E664	...Repeated for module number 26					
E668	...Repeated for module number 27					
E66C	...Repeated for module number 28					
E670	...Repeated for module number 29					
E674	...Repeated for module number 30					
E678	...Repeated for module number 31					
E67C	...Repeated for module number 32					

B

Table B–9: MODBUS MEMORY MAP (Sheet 26 of 28)

ADDR	REGISTER NAME	RANGE	UNITS	STEP	FORMAT	DEFAULT
Remote Output UserSt Pairs (Read/Write Setting) (32 modules)						
E680	Remote Output UserSt x Operand	0 to 65535	---	1	F300	0
E681	Remote Output UserSt x Events	0 to 1	---	1	F102	0 (Disabled)
E682	Remote Output UserSt x Reserved (2 items)	0 to 1	---	1	F001	0
E684	...Repeated for module number 2					
E688	...Repeated for module number 3					
E68C	...Repeated for module number 4					
E690	...Repeated for module number 5					
E694	...Repeated for module number 6					
E698	...Repeated for module number 7					
E69C	...Repeated for module number 8					
E6A0	...Repeated for module number 9					
E6A4	...Repeated for module number 10					
E6A8	...Repeated for module number 11					
E6AC	...Repeated for module number 12					
E6B0	...Repeated for module number 13					
E6B4	...Repeated for module number 14					
E6B8	...Repeated for module number 15					
E6BC	...Repeated for module number 16					
E6C0	...Repeated for module number 17					
E6C4	...Repeated for module number 18					
E6C8	...Repeated for module number 19					
E6CC	...Repeated for module number 20					
E6D0	...Repeated for module number 21					
E6D4	...Repeated for module number 22					
E6D8	...Repeated for module number 23					
E6DC	...Repeated for module number 24					
E6E0	...Repeated for module number 25					
E6E4	...Repeated for module number 26					
E6E8	...Repeated for module number 27					
E6EC	...Repeated for module number 28					
E6F0	...Repeated for module number 29					
E6F4	...Repeated for module number 30					
E6F8	...Repeated for module number 31					
E6FC	...Repeated for module number 32					
Factory Service Password Protection (Read/Write)						
F000	Modbus Factory Password	0 to 4294967295	---	1	F003	0
Factory Service Password Protection (Read Only)						
F002	Factory Service Password Status	0 to 1	---	1	F102	0 (Disabled)
Factory Service - Initialization (Read Only -- Written by Factory)						
F008	Load Default Settings	0 to 1	---	1	F126	0 (No)
F009	Reboot Relay	0 to 1	---	1	F126	0 (No)
Factory Service - Calibration (Read Only -- Written by Factory)						
F010	Calibration	0 to 1	---	1	F102	0 (Disabled)
F011	DSP Card to Calibrate	0 to 15	---	1	F172	0 (F)
F012	Channel to Calibrate	0 to 7	---	1	F001	0
F013	Channel Type	0 to 6	---	1	F140	0 (Disabled)
F014	Channel Name	---	---	---	F201	"0"
Factory Service - Calibration (Read Only)						
F018	A/D Counts	-32767 to 32767	---	1	F002	0
Factory Service - Calibration (Read Only -- Written by Factory)						
F019	Offset	-32767 to 32767	---	1	F002	0
F01B	Gain Stage	0 to 1	---	1	F135	0 (x1)
F01C	CT Winding	0 to 1	---	1	F123	0 (1 A)

Table B–9: MODBUS MEMORY MAP (Sheet 27 of 28)

ADDR	REGISTER NAME	RANGE	UNITS	STEP	FORMAT	DEFAULT
Factory Service - Calibration (Read Only)						
F01D	Measured Input	0 to 300	---	0.0001	F060	0
Factory Service - Calibration (Read Only -- Written by Factory)						
F01F	Gain Parameter	0.8 to 1.2	---	0.0001	F060	1
Factory Service - Calibration (Read Only)						
F02A	DSP Calibration Date	0 to 4294967295	---	1	F050	0
Factory Service - Debug Data (Read Only -- Written by Factory)						
F040	Debug Data 16 (16 items)	-32767 to 32767	---	1	F002	0
F050	Debug Data 32 (16 items)	-2147483647 to 2147483647	---	1	F004	0
Transducer Calibration (Read Only -- Written by Factory)						
F0A0	Transducer Calibration Function	0 to 1	---	1	F102	0 (Disabled)
F0A1	Transducer Card to Calibrate	0 to 15	---	1	F172	0 (F)
F0A2	Transducer Channel to Calibrate	0 to 7	---	1	F001	0
F0A3	Transducer Channel to Calibrate Type	0 to 3	---	1	F171	0 (dcmA IN)
F0A4	Transducer Channel to Calibrate Gain Stage	0 to 1	---	1	F170	0 (LOW)
Transducer Calibration (Read Only)						
F0A5	Transducer Channel to Calibrate Counts	0 to 4095	---	1	F001	0
Transducer Calibration (Read Only -- Written by Factory)						
F0A6	Transducer Channel to Calibrate Offset	-4096 to 4095	---	1	F002	0
F0A7	Transducer Channel to Calibrate Value	-1.1 to 366.5	---	0.001	F004	0
F0A9	Transducer Channel to Calibrate Gain	0.8 to 1.2	---	0.0001	F060	1
F0AB	Transducer Calibration Date	0 to 4294967295	---	1	F050	0
Transducer Calibration (Read Only)						
F0AD	Transducer Channel to Calibrate Units	---	---	---	F206	(none)
Factory Service Software Revisions (Read Only)						
F0F0	Compile Date	0 to 4294967295	---	1	F050	0
F0F3	Boot Version	0 to 655.35	---	0.01	F001	1
F0F4	Front Panel Version	0 to 655.35	---	0.01	F001	1
F0F5	Boot Date	0 to 4294967295	---	1	F050	0
Factory Service - Serial EEPROM (Read Only -- Written by Factory)						
F100	Serial EEPROM Enable	0 to 1	---	1	F102	0 (Disabled)
F101	Serial EEPROM Slot	0 to 15	---	1	F172	0 (F)
F102	Serial EEPROM Load Factory Defaults	0 to 1	---	1	F126	0 (No)
F110	Serial EEPROM Module Serial Number	---	---	---	F203	(none)
F120	Serial EEPROM Supplier Serial Number	---	---	---	F203	(none)
F130	Serial EEPROM Sub Module Serial Number (8 items)	---	---	---	F203	(none)
Factory Service CPU Diagnostics (Read Only Non-Volatile)						
F200	Operating Hours	0 to 4294967295	---	1	F050	0
Factory Service CPU Diagnostics (Read Only)						
F210	DSP Spurious Interrupt Counter	0 to 4294967295	---	1	F003	0
Factory Service CPU Diagnostics (Read Only -- Written by Factory)						
F220	Real Time Profiling	0 to 1	---	1	F102	0 (Disabled)
F221	Enable Windview	0 to 1	---	1	F102	0 (Disabled)
F222	Factory Reload Cause	---	---	---	F200	(none)
F236	Clear Diagnostics	0 to 1	---	1	F126	0 (No)
Factory Service CPU Performance (Read Only)						
F300	CPU Utilization	0 to 100	%	0.1	F001	0
Factory Service CPU Performance (Read/Write)						
F301	CPU Overload	0 to 6553.5	%	0.1	F001	0
Factory Service CPU Performance (Read Only)						
F302	Protection Pass Time	0 to 65535	us	1	F001	0
Factory Service CPU Performance (Read/Write)						
F303	Protection Pass Worst Time	0 to 65535	us	1	F001	0

B

Table B–9: MODBUS MEMORY MAP (Sheet 28 of 28)

ADDR	REGISTER NAME	RANGE	UNITS	STEP	FORMAT	DEFAULT
Factory Service DSP Diagnostics (Read Only) (3 modules)						
F380	DSP Checksum Error Counter	0 to 4294967295	---	1	F003	0
F382	DSP Corrupt Settings Counter	0 to 4294967295	---	1	F003	0
F384	DSP Out Of Sequence Error Counter	0 to 4294967295	---	1	F003	0
F386	DSP Flags Error Counter	0 to 4294967295	---	1	F003	0
F38D	DSP Error Flags	0 to 65535	---	1	F001	0
F38E	DSP Error Code	0 to 65535	---	1	F001	0
F38F	DSP Usage	0 to 100	---	0.1	F001	0
F390	...Repeated for module number 2					
F3A0	...Repeated for module number 3					
Modbus File Transfer Area 2 (Read/Write)						
FA00	Name of file to read	---	---	---	F204	(none)
Modbus File Transfer Area 2 (Read Only)						
FB00	Character position of current block within file	0 to 4294967295	---	1	F003	0
FB02	Size of currently-available data block	0 to 65535	---	1	F001	0
FB03	Block of data from requested file (122 items)	0 to 65535	---	1	F001	0
Neutral Overvoltage (Read/Write Grouped Setting) (3 modules)						
FC00	Neutral OV X Function	0 to 1	---	1	F102	0 (Disabled)
FC01	Neutral OV X Signal Source	0 to 5	---	1	F167	0 (SRC 1)
FC02	Neutral OV X Pickup	0 to 1.25	pu	0.001	F001	300
FC03	Neutral OV X Pickup Delay	0 to 600	s	0.01	F001	100
FC04	Neutral OV X Reset Delay	0 to 600	s	0.01	F001	100
FC05	Neutral OV X Block	0 to 65535	---	1	F300	0
FC06	Neutral OV X Target	0 to 2	---	1	F109	0 (Self-reset)
FC07	Neutral OV X Events	0 to 1	---	1	F102	0 (Disabled)
FC08	Neutral OV Reserved (8 items)	0 to 65535	---	1	F001	0
FC10	...Repeated for module number 2					
FC20	...Repeated for module number 3					
Auxiliary Overvoltage (Read/Write Grouped Setting) (3 modules)						
FC30	Auxiliary OV X Function	0 to 1	---	1	F102	0 (Disabled)
FC31	Auxiliary OV X Signal Source	0 to 5	---	1	F167	0 (SRC 1)
FC32	Auxiliary OV X Pickup	0 to 3	pu	0.001	F001	300
FC33	Auxiliary OV X Pickup Delay	0 to 600	s	0.01	F001	100
FC34	Auxiliary OV X Reset Delay	0 to 600	s	0.01	F001	100
FC35	Auxiliary OV X Block	0 to 65535	---	1	F300	0
FC36	Auxiliary OV X Target	0 to 2	---	1	F109	0 (Self-reset)
FC37	Auxiliary OV X Events	0 to 1	---	1	F102	0 (Disabled)
FC38	Auxiliary OV X Reserved (8 items)	0 to 65535	---	1	F001	0
FC40	...Repeated for module number 2					
FC50	...Repeated for module number 3					
Auxiliary Undervoltage (Read/Write Grouped Setting) (3 modules)						
FC60	Auxiliary UV X Function	0 to 1	---	1	F102	0 (Disabled)
FC61	Auxiliary UV X Signal Source	0 to 5	---	1	F167	0 (SRC 1)
FC62	Auxiliary UV X Pickup	0 to 3	pu	0.001	F001	700
FC63	Auxiliary UV X Delay	0 to 600	s	0.01	F001	100
FC64	Auxiliary UV X Curve	0 to 1	---	1	F111	0 (Definite Time)
FC65	Auxiliary UV X Minimum Voltage	0 to 3	pu	0.001	F001	100
FC66	Auxiliary UV X Block	0 to 65535	---	1	F300	0
FC67	Auxiliary UV X Target	0 to 2	---	1	F109	0 (Self-reset)
FC68	Auxiliary UV X Events	0 to 1	---	1	F102	0 (Disabled)
FC69	Auxiliary UV X Reserved (7 items)	0 to 65535	---	1	F001	0
FC70	...Repeated for module number 2					
FC80	...Repeated for module number 3					

F001
UR_UINT16 UNSIGNED 16 BIT INTEGER

F002
UR_SINT16 SIGNED 16 BIT INTEGER

F003
UR_UINT32 UNSIGNED 32 BIT INTEGER (2 registers)

High order word is stored in the first register.
Low order word is stored in the second register.

F004
UR_SINT32 SIGNED 32 BIT INTEGER (2 registers)

High order word is stored in the first register/
Low order word is stored in the second register.

F005
UR_UINT8 UNSIGNED 8 BIT INTEGER

F006
UR_SINT8 SIGNED 8 BIT INTEGER

F011
UR_UINT16 FLEXCURVE DATA (120 points)

A FlexCurve is an array of 120 consecutive data points (x, y) which are interpolated to generate a smooth curve. The y-axis is the user defined trip or operation time setting; the x-axis is the pickup ratio and is pre-defined. Refer to format F119 for a listing of the pickup ratios; the enumeration value for the pickup ratio indicates the offset into the FlexCurve base address where the corresponding time value is stored.

F012
DISPLAY_SCALE DISPLAY SCALING
(unsigned 16-bit integer)

MSB indicates the SI units as a power of ten. LSB indicates the number of decimal points to display.

Example: Current values are stored as 32 bit numbers with three decimal places and base units in Amps. If the retrieved value is 12345.678 A and the display scale equals 0x0302 then the displayed value on the unit is 12.35 kA.

F013
POWER_FACTOR PWR FACTOR (SIGNED 16 BIT INTEGER)

Positive values indicate lagging power factor; negative values indicate leading.

F040
UR_UINT48 48-BIT UNSIGNED INTEGER

F050
UR_UINT32 TIME and DATE (UNSIGNED 32 BIT INTEGER)

Gives the current time in seconds elapsed since 00:00:00 January 1, 1970.

F051
UR_UINT32 DATE in SR format (alternate format for F050)

First 16 bits are Month/Day (MM/DD/xxxx). Month: 1=January, 2=February,...,12=December; Day: 1 to 31 in steps of 1
Last 16 bits are Year (xx/xx/YYYY): 1970 to 2106 in steps of 1

F052
UR_UINT32 TIME in SR format (alternate format for F050)

First 16 bits are Hours/Minutes (HH:MM:xx.xxx).
Hours: 0=12am, 1=1am,...,12=12pm,...23=11pm;
Minutes: 0 to 59 in steps of 1

Last 16 bits are Seconds (xx:xx:.SS.SSS): 0=00.000s, 1=00.001,...,59999=59.999s)

F060
FLOATING_POINT IEE FLOATING POINT (32 bits)

F070
HEX2 2 BYTES - 4 ASCII DIGITS

F071
HEX4 4 BYTES - 8 ASCII DIGITS

F072
HEX6 6 BYTES - 12 ASCII DIGITS

F073
HEX8 8 BYTES - 16 ASCII DIGITS

F074
HEX20 20 BYTES - 40 ASCII DIGITS

F100
ENUMERATION: VT CONNECTION TYPE

0 = Wye; 1 = Delta

B

F101
ENUMERATION: MESSAGE DISPLAY INTENSITY

0 = 25%, 1 = 50%, 2 = 75%, 3 = 100%

F102
ENUMERATION: DISABLED/ENABLED

0 = Disabled; 1 = Enabled

F103
ENUMERATION: CURVE SHAPES

bitmask	curve shape
0	IEEE Mod Inv
1	IEEE Very Inv
2	IEEE Ext Inv
3	IEC Curve A
4	IEC Curve B
5	IEC Curve C
6	IEC Short Inv
7	IAC Ext Inv

bitmask	curve shape
8	IAC Very Inv
9	IAC Inverse
10	IAC Short Inv
11	I2t
12	Definite Time
13	Flexcurve A
14	Flexcurve B

F104
ENUMERATION: RESET TYPE

0 = Instantaneous, 1 = Timed, 2 = Linear

F105
ENUMERATION: LOGIC INPUT

0 = Disabled, 1 = Input 1, 2 = Input 2

F106
ENUMERATION: PHASE ROTATION

0 = ABC, 1 = ACB

F108
ENUMERATION: OFF/ON

0 = Off, 1 = On

F109
ENUMERATION: CONTACT OUTPUT OPERATION

0 = Self-reset, 1 = Latched, 2 = Disabled

F110
ENUMERATION: CONTACT OUTPUT LED CONTROL

0 = Trip, 1 = Alarm, 2 = None

F111
ENUMERATION: UNDERVOLTAGE CURVE SHAPES

0 = Definite Time, 1 = Inverse Time

F112
ENUMERATION: RS485 BAUD RATES

bitmask	value
0	300
1	1200
2	2400
3	4800

bitmask	value
4	9600
5	19200
6	38400
7	57600

bitmask	value
8	115200
9	14400
10	28800
11	33600

F113
ENUMERATION: PARITY

0 = None, 1 = Odd, 2 = Even

F114
ENUMERATION: IRIG-B SIGNAL TYPE

0 = None, 1 = DC Shift, 2 = Amplitude Modulated

F117
ENUMERATION: NUMBER OF OSCILLOGRAPHY RECORDS

0 = 1×72 cycles, 1 = 3×36 cycles, 2 = 7×18 cycles, 3 = 15×9 cycles

F118
ENUMERATION: OSCILLOGRAPHY MODE

0 = Automatic Overwrite, 1 = Protected

F119
ENUMERATION: FLEXCURVE PICKUP RATIOS

mask	value	mask	value	mask	value	mask	value
0	0.00	30	0.88	60	2.90	90	5.90
1	0.05	31	0.90	61	3.00	91	6.00
2	0.10	32	0.91	62	3.10	92	6.50
3	0.15	33	0.92	63	3.20	93	7.00
4	0.20	34	0.93	64	3.30	94	7.50
5	0.25	35	0.94	65	3.40	95	8.00
6	0.30	36	0.95	66	3.50	96	8.50
7	0.35	37	0.96	67	3.60	97	9.00
8	0.40	38	0.97	68	3.70	98	9.50
9	0.45	39	0.98	69	3.80	99	10.00
10	0.48	40	1.03	70	3.90	100	10.50
11	0.50	41	1.05	71	4.00	101	11.00
12	0.52	42	1.10	72	4.10	102	11.50
13	0.54	43	1.20	73	4.20	103	12.00
14	0.56	44	1.30	74	4.30	104	12.50
15	0.58	45	1.40	75	4.40	105	13.00
16	0.60	46	1.50	76	4.50	106	13.50
17	0.62	47	1.60	77	4.60	107	14.00
18	0.64	48	1.70	78	4.70	108	14.50
19	0.66	49	1.80	79	4.80	109	15.00
20	0.68	50	1.90	80	4.90	110	15.50
21	0.70	51	2.00	81	5.00	111	16.00
22	0.72	52	2.10	82	5.10	112	16.50
23	0.74	53	2.20	83	5.20	113	17.00
24	0.76	54	2.30	84	5.30	114	17.50
25	0.78	55	2.40	85	5.40	115	18.00
26	0.80	56	2.50	86	5.50	116	18.50
27	0.82	57	2.60	87	5.60	117	19.00
28	0.84	58	2.70	88	5.70	118	19.50
29	0.86	59	2.80	89	5.80	119	20.00

F122
ENUMERATION: ELEMENT INPUT SIGNAL TYPE

0 = Phasor, 1 = RMS

F123
ENUMERATION: CT SECONDARY

0 = 1 A, 1 = 5 A

F124
ENUMERATION: LIST OF ELEMENTS

bitmask	element
0	PHASE IOC1
1	PHASE IOC2
2	PHASE IOC3
3	PHASE IOC4
4	PHASE IOC5
5	PHASE IOC6
6	PHASE IOC7
7	PHASE IOC8
8	PHASE IOC9
9	PHASE IOC10
10	PHASE IOC11
11	PHASE IOC12
16	PHASE TOC1
17	PHASE TOC2
18	PHASE TOC3
19	PHASE TOC4
20	PHASE TOC5
21	PHASE TOC6
24	PH DIR1
25	PH DIR2
32	NEUTRAL IOC1
33	NEUTRAL IOC2
34	NEUTRAL IOC3
35	NEUTRAL IOC4
36	NEUTRAL IOC5
37	NEUTRAL IOC6
38	NEUTRAL IOC7
39	NEUTRAL IOC8
40	NEUTRAL IOC9
41	NEUTRAL IOC10
42	NEUTRAL IOC11
43	NEUTRAL IOC12
48	NEUTRAL TOC1
49	NEUTRAL TOC2
50	NEUTRAL TOC3
51	NEUTRAL TOC4
52	NEUTRAL TOC5
53	NEUTRAL TOC6
56	NTRL DIR
57	NTRL DIR
60	NEG SEQ
61	NEG SEQ
64	GROUND IOC1
65	GROUND IOC2
66	GROUND IOC3

B

bitmask	element
67	GROUND IOC4
68	GROUND IOC5
69	GROUND IOC6
70	GROUND IOC7
71	GROUND IOC8
72	GROUND IOC9
73	GROUND IOC10
74	GROUND IOC11
75	GROUND IOC12
80	GROUND TOC1
81	GROUND TOC2
82	GROUND TOC3
83	GROUND TOC4
84	GROUND TOC5
85	GROUND TOC6
96	NEG SEQ
97	NEG SEQ
112	NEG SEQ
113	NEG SEQ
120	NEG SEQ
140	AUX UV1
141	AUX UV2
142	AUX UV3
144	PHASE UV1
145	PHASE UV2
148	AUX OV1
149	AUX OV2
150	AUX OV3
152	PHASE OV1
156	NEUTRAL OV1
157	NEUTRAL OV2
158	NEUTRAL OV3
180	LOAD ENCHR
184	DUTT
185	PUTT
186	POTT
187	HYBRID POTT
188	BLOCK SCHEME
190	POWER SWING
224	SRC1 VT
225	SRC2 VT
226	SRC3 VT
227	SRC4 VT
228	SRC5 VT
229	SRC6 VT
242	OPEN POLE
244	50DD
245	CONT MONITOR

bitmask	element
246	CT FAIL
247	CT TROUBLE1
248	CT TROUBLE2
265	STATOR DIFF
272	BREAKER 1
273	BREAKER 2
280	BKR FAIL
281	BKR FAIL
288	BKR ARC
289	BKR ARC
296	ACCDNT ENRG
300	LOSS EXCIT
304	AR 1
305	AR 2
306	AR 3
307	AR 4
308	AR 5
309	AR 6
312	SYNC 1
313	SYNC 2
320	COLD LOAD
321	COLD LOAD
324	AMP UNBALANCE
325	AMP UNBALANCE
330	3RD HARM
336	SETTING GROUP
337	RESET
344	OVERFREQ 1
345	OVERFREQ 2
346	OVERFREQ 3
347	OVERFREQ 4
352	UNDERFREQ 1
353	UNDERFREQ 2
354	UNDERFREQ 3
355	UNDERFREQ 4
356	UNDERFREQ 5
357	UNDERFREQ 6
400	FLEX ELEMENT 1
401	FLEX ELEMENT 2
402	FLEX ELEMENT 3
403	FLEX ELEMENT 4
404	FLEX ELEMENT 5
405	FLEX ELEMENT 6
406	FLEX ELEMENT 7
407	FLEX ELEMENT 8
408	FLEX ELEMENT 9
409	FLEX ELEMENT 10
410	FLEX ELEMENT 11

bitmask	element
411	FLEX ELEMENT 12
412	FLEX ELEMENT 13
413	FLEX ELEMENT 14
414	FLEX ELEMENT 15
415	FLEX ELEMENT 16
512	DIG ELEM 1
513	DIG ELEM 2
514	DIG ELEM 3
515	DIG ELEM 4
516	DIG ELEM 5
517	DIG ELEM 6
518	DIG ELEM 7
519	DIG ELEM 8
520	DIG ELEM 9
521	DIG ELEM 10
522	DIG ELEM 11
523	DIG ELEM 12
524	DIG ELEM 13
525	DIG ELEM 14
526	DIG ELEM 15
527	DIG ELEM 16
544	COUNTER 1
545	COUNTER 2
546	COUNTER 3
547	COUNTER 4
548	COUNTER 5
549	COUNTER 6
550	COUNTER 7
551	COUNTER 8

F125
ENUMERATION: ACCESS LEVEL

0 = Restricted; 1 = Command, 2 = Setting, 3 = Factory Service

F126
ENUMERATION: NO/YES CHOICE

0 = No, 1 = Yes

F127
ENUMERATION: LATCHED OR SELF-RESETTING

0 = Latched, 1 = Self-Reset

F128
ENUMERATION: CONTACT INPUT THRESHOLD

0 = 16 Vdc, 1 = 30 Vdc, 2 = 80 Vdc, 3 =140 Vdc

F129
ENUMERATION: FLEXLOGIC TIMER TYPE

0 = millisecond, 1 = second, 2 = minute

F130
ENUMERATION: SIMULATION MODE

0 = Off. 1 = Pre-Fault, 2 = Fault, 3 = Post-Fault

F131
ENUMERATION: FORCED CONTACT OUTPUT STATE

0 = Disabled, 1 = Energized, 2 = De-energized, 3 = Freeze

F132
ENUMERATION: DEMAND INTERVAL

0 = 5 min, 1 = 10 min, 2 = 15 min, 3 = 20 min, 4 = 30 min,
5 = 60 min

F133
ENUMERATION: PROGRAM STATE

0 = Not Programmed, 1 = Programmed

F134
ENUMERATION: PASS/FAIL

0 = Fail, 1 = OK, 2 = n/a

F135
ENUMERATION: GAIN CALIBRATION

0 = 0x1, 1 = 1x16

F136
ENUMERATION: NUMBER OF OSCILLOGRAPHY RECORDS

0 = 31 x 8 cycles, 1 = 15 x 16 cycles, 2 = 7 x 32 cycles
3 = 3 x 64 cycles, 4 = 1 x 128 cycles

F138
ENUMERATION: OSCILLOGRAPHY FILE TYPE

0 = Data File, 1 = Configuration File, 2 = Header File

F139
ENUMERATION: DEMAND CALCULATIONS

0 = Thermal Exponential, 1 = Block Interval, 2 = Rolling Demand

B

F140
ENUMERATION: CURRENT, SENS CURRENT, VOLTAGE, DISABLED

0 = Disabled, 1 = Current 46A, 2 = Voltage 280V, 3 = Current 4.6A
4 = Current 2A, 5 = Notched 4.6A, 6 = Notched 2A

F141
ENUMERATION: SELF TEST ERROR

bitmask	error
0	ANY SELF TESTS
1	IRIG-B FAILURE
2	DSP ERROR
4	NO DSP INTERRUPTS
5	UNIT NOT CALIBRATED
9	PROTOTYPE FIRMWARE
10	FLEXLOGIC ERR TOKEN
11	EQUIPMENT MISMATCH
13	UNIT NOT PROGRAMMED
14	SYSTEM EXCEPTION
19	BATTERY FAIL
20	PRI ETHERNET FAIL
21	SEC ETHERNET FAIL
22	EEPROM DATA ERROR
23	SRAM DATA ERROR
24	PROGRAM MEMORY
25	WATCHDOG ERROR
26	LOW ON MEMORY
27	REMOTE DEVICE OFF
30	ANY MINOR ERROR
31	ANY MAJOR ERROR

F142
ENUMERATION: EVENT RECORDER ACCESS FILE TYPE

0 = All Record Data, 1 = Headers Only, 2 = Numeric Event Cause

F143
UR_UINT32: 32 BIT ERROR CODE (F141 specifies bit number)

A bit value of 0 = no error, 1 = error

F144
ENUMERATION: FORCED CONTACT INPUT STATE

0 = Disabled, 1 = Open, 2 = Closed

F145
ENUMERATION: ALPHABET LETTER

bitmask	type	bitmask	type	bitmask	type	bitmask	type
0	null	7	G	14	N	21	U
1	A	8	H	15	O	22	V
2	B	9	I	16	P	23	W
3	C	10	J	17	Q	24	X
4	D	11	K	18	R	25	Y
5	E	12	L	19	S	26	Z
6	F	13	M	20	T		

F146
ENUMERATION: MISC. EVENT CAUSES

bitmask	definition
0	EVENTS CLEARED
1	OSCILLOGRAPHY TRIGGERED
2	DATE/TIME CHANGED
3	DEF SETTINGS LOADED
4	TEST MODE ON
5	TEST MODE OFF
6	POWER ON
7	POWER OFF
8	RELAY IN SERVICE
9	RELAY OUT OF SERVICE
10	WATCHDOG RESET
11	OSCILLOGRAPHY CLEAR
12	REBOOT COMMAND

F151
ENUMERATION: RTD SELECTION

bitmask	RTD#	bitmask	RTD#	bitmask	RTD#
0	NONE	17	RTD 17	33	RTD 33
1	RTD 1	18	RTD 18	34	RTD 34
2	RTD 2	19	RTD 19	35	RTD 35
3	RTD 3	20	RTD 20	36	RTD 36
4	RTD 4	21	RTD 21	37	RTD 37
5	RTD 5	22	RTD 22	38	RTD 38
6	RTD 6	23	RTD 23	39	RTD 39
7	RTD 7	24	RTD 24	40	RTD 40
8	RTD 8	25	RTD 25	41	RTD 41
9	RTD 9	26	RTD 26	42	RTD 42
10	RTD 10	27	RTD 27	43	RTD 43
11	RTD 11	28	RTD 28	44	RTD 44
12	RTD 12	29	RTD 29	45	RTD 45
13	RTD 13	30	RTD 30	46	RTD 46
14	RTD 14	31	RTD 31	47	RTD 47
15	RTD 15	32	RTD 32	48	RTD 48
16	RTD 16				

F152
ENUMERATION: SETTING GROUP

0 = Active Group, 1 = Group 1, 2 = Group 2, 3 = Group 3
4 = Group 4, 5 = Group 5, 6 = Group 6, 7 = Group 7, 8 = Group 8

F155
ENUMERATION: REMOTE DEVICE STATE

0 = Offline, 1 = Online

F156
ENUMERATION: REMOTE INPUT BIT PAIRS

bitmask	RTD#	bitmask	RTD#	bitmask	RTD#
0	NONE	22	DNA-22	44	UserSt-12
1	DNA-1	23	DNA-23	45	UserSt-13
2	DNA-2	24	DNA-24	46	UserSt-14
3	DNA-3	25	DNA-25	47	UserSt-15
4	DNA-4	26	DNA-26	48	UserSt-16
5	DNA-5	27	DNA-27	49	UserSt-17
6	DNA-6	28	DNA-28	50	UserSt-18
7	DNA-7	29	DNA-29	51	UserSt-19
8	DNA-8	30	DNA-30	52	UserSt-20
9	DNA-9	31	DNA-31	53	UserSt-21
10	DNA-10	32	DNA-32	54	UserSt-22
11	DNA-11	33	UserSt-1	55	UserSt-23
12	DNA-12	34	UserSt-2	56	UserSt-24
13	DNA-13	35	UserSt-3	57	UserSt-25
14	DNA-14	36	UserSt-4	58	UserSt-26
15	DNA-15	37	UserSt-5	59	UserSt-27
16	DNA-16	38	UserSt-6	60	UserSt-28
17	DNA-17	39	UserSt-7	61	UserSt-29
18	DNA-18	40	UserSt-8	62	UserSt-30
19	DNA-19	41	UserSt-9	63	UserSt-31
20	DNA-20	42	UserSt-10	64	UserSt-32
21	DNA-21	43	UserSt-11		

F166
ENUMERATION: AUXILIARY VT CONNECTION TYPE

0 = Vn, 1 = Vag, 2 = Vbg, 3 = Vcg, 4 = Vab, 5 = Vbc, 6 = Vca

F167
ENUMERATION: SIGNAL SOURCE

0 = SRC 1, 1 = SRC 2, 2 = SRC 3, 3 = SRC 4,
4 = SRC 5, 5 = SRC 6

F168
ENUMERATION: INRUSH INHIBIT FUNCTION

0 = Disabled, 1 = 2nd

F169
ENUMERATION: OVEREXCITATION INHIBIT FUNCTION

0 = Disabled, 1 = 5th

B

F170
ENUMERATION: LOW/HIGH OFFSET & GAIN TRANSDUCER I/O SELECTION

0 = LOW, 1 = HIGH

F171
ENUMERATION: TRANSDUCER CHANNEL INPUT TYPE

0 = dcmA IN, 1 = OHMS IN, 2 = RTD IN, 3 = dcmA OUT

F172
ENUMERATION: SLOT LETTERS

bitmask	slot	bitmask	slot	bitmask	slot	bitmask	slot
0	F	4	K	8	P	12	U
1	G	5	L	9	R	13	V
2	H	6	M	10	S	14	W
3	J	7	N	11	T	15	X

F173
ENUMERATION: TRANSDUCER DCMA I/O RANGE

bitmask	dcmA I/O range
0	0 to –1 mA
1	0 to 1 mA
2	–1 to 1 mA
3	0 to 5 mA
4	0 to 10 mA
5	0 to 20 mA
6	4 to 20 mA

F174
ENUMERATION: TRANSDUCER RTD INPUT TYPE

0 = 100 Ohm Platinum, 1 = 120 Ohm Nickel,
2 = 100 Ohm Nickel, 3 = 10 Ohm Copper

F175
ENUMERATION: PHASE LETTERS

0 = A, 1 = B, 2 = C

F177
ENUMERATION: COMMUNICATION PORT

0 = NONE, 1 = COM1-RS485, 2 = COM2-RS485,
3 = FRONT PANEL-RS232, 4 = NETWORK

F178
ENUMERATION: DATA LOGGER RATES

0 = 1 sec, 1 = 1 min, 2 = 5 min, 3 = 10 min, 4 = 15 min,
5 = 20 min, 6 = 30 min, 7 = 60 min

F180
ENUMERATION: PHASE/GROUND

0 = PHASE, 1 = GROUND

F181
ENUMERATION: ODD/EVEN/NONE

0 = ODD, 1 = EVEN, 2 = NONE

F183
ENUMERATION AC INPUT WAVEFORMS

bitmask	definition
0	Off
1	8 samples/cycle
2	16 samples/cycle
3	32 samples/cycle
4	64 samples/cycle

F185
ENUMERATION PHASE A,B,C, GROUND SELECTOR

0 = A, 1 = B, 2 = C, 3 = G

F186
ENUMERATION MEASUREMENT MODE

0 = Phase to Ground, 1 = Phase to Phase

F190
ENUMERATION Simulated Keypress

bitmask	keypress
0	--- use between real keys
1	1
2	2
3	3
4	4
5	5
6	6
7	7
8	8
9	9
10	0
11	Decimal Pt
12	Plus/Minus

bitmask	keypress
13	Value Up
14	Value Down
15	Message Up
16	Message Down
17	Message Left
18	Message Right
19	Menu
20	Help
21	Escape
22	Enter
23	Reset
24	User 1
25	User 2
26	User 3

F192
ENUMERATION ETHERNET OPERATION MODE

0 = Half-Duplex, 1 = Full-Duplex

F194
ENUMERATION DNP SCALE

A bitmask of 0 = 0.01, 1 = 0.1, 2 = 1, 3 = 10, 4 = 100, 5 = 1000

F197
ENUMERATION DNP BINARY INPUT POINT BLOCK

bitmask	Input Point Block
0	Not Used
1	Virtual Inputs 1 to 16
2	Virtual Inputs 17 to 32
3	Virtual Outputs 1 to 16
4	Virtual Outputs 17 to 32
5	Virtual Outputs 33 to 48
6	Virtual Outputs 49 to 64
7	Contact Inputs 1 to 16
8	Contact Inputs 17 to 32
9	Contact Inputs 33 to 48
10	Contact Inputs 49 to 64
11	Contact Inputs 65 to 80
12	Contact Inputs 81 to 96
13	Contact Outputs 1 to 16
14	Contact Outputs 17 to 32
15	Contact Outputs 33 to 48
16	Contact Outputs 49 to 64
17	Remote Inputs 1 to 16
18	Remote Inputs 17 to 32
19	Remote Devs 1 to 16
20	Elements 1 to 16
21	Elements 17 to 32
22	Elements 33 to 48
23	Elements 49 to 64
24	Elements 65 to 80
25	Elements 81 to 96
26	Elements 97 to 112
27	Elements 113 to 128
28	Elements 129 to 144
29	Elements 145 to 160
30	Elements 161 to 176
31	Elements 177 to 192
32	Elements 193 to 208
33	Elements 209 to 224
34	Elements 225 to 240
35	Elements 241 to 256
36	Elements 257 to 272
37	Elements 273 to 288
38	Elements 289 to 304
39	Elements 305 to 320
40	Elements 321 to 336
41	Elements 337 to 352
42	Elements 353 to 368
43	Elements 369 to 384
44	Elements 385 to 400
45	Elements 401 to 406
46	Elements 417 to 432
47	Elements 433 to 448
48	Elements 449 to 464
49	Elements 465 to 480
50	Elements 481 to 496
51	Elements 497 to 512
52	Elements 513 to 528
53	Elements 529 to 544
54	Elements 545 to 560
55	LED States 1 to 16
56	LED States 17 to 32
57	Self Tests 1 to 16
58	Self Tests 17 to 32

F200
TEXT40 40 CHARACTER ASCII TEXT

20 registers, 16 Bits: 1st Char MSB, 2nd Char. LSB

B

F201
TEXT8 8 CHARACTER ASCII PASSCODE

4 registers, 16 Bits: 1st Char MSB, 2nd Char. LSB

F202
TEXT20 20 CHARACTER ASCII TEXT

10 registers, 16 Bits: 1st Char MSB, 2nd Char. LSB

F203
TEXT16 16 CHARACTER ASCII TEXT

F204
TEXT80 80 CHARACTER ASCII TEXT

F205
TEXT12 12 CHARACTER ASCII TEXT

F206
TEXT6 6 CHARACTER ASCII TEXT

F207
TEXT4 4 CHARACTER ASCII TEXT

F208
TEXT2 2 CHARACTER ASCII TEXT

F222
ENUMERATION TEST ENUMERATION

0 = Test Enumeration 0, 1 = Test Enumeration 1

F300
UR_UINT16 FLEXLOGIC BASE TYPE (6 bit type)

The FlexLogic™ BASE type is 6 bits and is combined with a 9 bit descriptor and 1 bit for protection element to form a 16 bit value. The combined bits are of the form: PTTTTTTDDDDDDDDD, where P bit if set, indicates that the FlexLogic™ type is associated with a protection element state and T represents bits for the BASE type, and D represents bits for the descriptor.

The values in square brackets indicate the base type with P prefix [PTTTTTT] and the values in round brackets indicate the descriptor range.

[0] Off(0) this is boolean FALSE value
[0] On (1)This is boolean TRUE value
[2] CONTACT INPUTS (1 - 96)
[3] CONTACT INPUTS OFF (1-96)
[4] VIRTUAL INPUTS (1-64)
[6] VIRTUAL OUTPUTS (1-64)
[10] CONTACT OUTPUTS VOLTAGE DETECTED (1-64)
[11] CONTACT OUTPUTS VOLTAGE OFF DETECTED (1-64)
[12] CONTACT OUTPUTS CURRENT DETECTED (1-64)
[13] CONTACT OUTPUTS CURRENT OFF DETECTED (1-64)
[14] REMOTE INPUTS (1-32)
[28] INSERT (Via Keypad only)
[32] END
[34] NOT (1 INPUT)
[36] 2 INPUT XOR (0)
[38] LATCH SET/RESET (2 INPUTS)
[40] OR (2-16 INPUTS)
[42] AND (2-16 INPUTS)
[44] NOR (2-16 INPUTS)
[46] NAND (2-16 INPUTS)
[48] TIMER (1-32)
[50] ASSIGN VIRTUAL OUTPUT (1 - 64)
[52] SELF-TEST ERROR (See F141 for range)
[56] ACTIVE SETTING GROUP (1-8)
[62] MISCELLANEOUS EVENTS (See F146 for range)
[64-127] ELEMENT STATES
(Refer to Memory Map Element States Section)

F400
UR_UINT16 CT/VT BANK SELECTION

bitmask	bank selection
0	Card 1 Contact 1 to 4
1	Card 1 Contact 5 to 8
2	Card 2 Contact 1 to 4
3	Card 2 Contact 5 to 8
4	Card 3 Contact 1 to 4
5	Card 3 Contact 5 to 8

F500
UR_UINT16 PACKED BITFIELD

First register indicates I/O state with bits 0(MSB)-15(LSB) corresponding to I/0 state 1-16. The second register indicates I/O state with bits 0-15 corresponding to I/0 state 17-32 (if required) The third register indicates I/O state with bits 0-15 corresponding to I/0 state 33-48 (if required). The fourth register indicates I/O state with bits 0-15 corresponding to I/0 state 49-64 (if required).

The number of registers required is determined by the specific data item. A bit value of 0 = Off, 1 = On

F501
UR_UINT16 LED STATUS

Low byte of register indicates LED status with bit 0 representing the top LED and bit 7 the bottom LED. A bit value of 1 indicates the LED is on, 0 indicates the LED is off.

F502
BITFIELD ELEMENT OPERATE STATES

Each bit contains the operate state for an element. See the F124 format code for a list of element IDs. The operate bit for element ID X is bit [X mod 16] in register [X/16].

F504
BITFIELD 3 PHASE ELEMENT STATE

bitmask	element state
0	Pickup
1	Operate
2	Pickup Phase A
3	Pickup Phase B
4	Pickup Phase C
5	Operate Phase A
6	Operate Phase B
7	Operate Phase C

F505
BITFIELD CONTACT OUTPUT STATE

0 = Contact State, 1 = Voltage Detected, 2 = Current Detected

F506|
BITFIELD 1 PHASE ELEMENT STATE

0 = Pickup, 1 = Operate

F507
BITFIELD COUNTER ELEMENT STATE

0 = Count Greater Than, 1 = Count Equal To, 2 = Count Less Than

F509
BITFIELD SIMPLE ELEMENT STATE

0 = Operate

F511
BITFIELD 3 PHASE SIMPLE ELEMENT STATE

0 = Operate, 1 = Operate A, 2 = Operate B, 3 = Operate C

F515
ENUMERATION ELEMENT INPUT MODE

0 = SIGNED, 1 = ABSOLUTE

F516
ENUMERATION ELEMENT COMPARE MODE

0 = LEVEL, 1 = DELTA

F518
ENUMERATION FlexElement Units

0 = Milliseconds, 1 = Seconds, 2 = Minutes

F600
UR_UINT16 FlexAnalog Parameter

The 16-bit value corresponds to the modbus address of the value to be used when this parameter is selected. Only certain values may be used as FlexAnalogs (basically all the metering quantities used in protection)

MMI_FLASH ENUMERATION
Flash message definitions for Front-panel MMI

bitmask	Flash Message
1	ADJUSTED VALUE HAS BEEN STORED
2	ENTERED PASSCODE IS INVALID
3	COMMAND EXECUTED
4	DEFAULT MESSAGE HAS BEEN ADDED
5	DEFAULT MESSAGE HAS BEEN REMOVED
6	INPUT FUNCTION IS ALREADY ASSIGNED
7	PRESS [ENTER] TO ADD AS DEFAULT
8	PRESS [ENTER] TO REMOVE MESSAGE
9	PRESS [ENTER] TO BEGIN TEXT EDIT
10	ENTRY MISMATCH - CODE NOT STORED
11	PRESSED KEY IS INVALID HERE
12	INVALID KEY: MUST BE IN LOCAL MODE
13	NEW PASSWORD HAS BEEN STORED
14	PLEASE ENTER A NON-ZERO PASSCODE
15	NO ACTIVE TARGETS (TESTING LEDS)
16	OUT OF RANGE - VALUE NOT STORED
17	RESETTING LATCHED CONDITIONS
18	SETPOINT ACCESS IS NOW ALLOWED
19	SETPOINT ACCESS DENIED (PASSCODE)
20	SETPOINT ACCESS IS NOW RESTRICTED
21	NEW SETTING HAS BEEN STORED
22	SETPOINT ACCESS DENIED (SWITCH)
23	DATA NOT ACCEPTED
24	NOT ALL CONDITIONS HAVE BEEN RESET
25	DATE NOT ACCEPTED IRIGB IS ENABLED
26	NOT EXECUTED
27	DISPLAY ADDED TO USER DISPLAY LIST
28	DISPLAY NOT ADDED TO USER DISPLAY LIST
29	DISPLAY REMOVED FROM USER DISPLAY LIST

MMI_PASSWORD_TYPE ENUMERATION
Password types for display in password prompts

bitmask	password type
0	No
1	MASTER
2	SETTING
3	COMMAND
4	FACTORY

B

MMI_SETTING_TYPE ENUMERATION
Setting types for display in web pages

bitmask	Setting Type
0	Unrestricted Setting
1	Master-accessed Setting
2	Setting
3	Command
4	Factory Setting

C.1.1 UCA

The **Utility Communications Architecture** (UCA) version 2 represents an attempt by utilities and vendors of electronic equipment to produce standardized communications systems. There is a set of reference documents available from the Electric Power Research Institute (EPRI) and vendors of UCA/MMS software libraries that describe the complete capabilities of the UCA. Following, is a description of the subset of UCA/MMS features that are supported by the UR relay. The reference document set includes:

- Introduction to UCA version 2
- Generic Object Models for Substation & Feeder Equipment (GOMSFE)
- Common Application Service Models (CASM) and Mapping to MMS
- UCA Version 2 Profiles

These documents can be obtained from ftp://www.sisconet.com/epri/subdemo/uca2.0. It is strongly recommended that all those involved with any UCA implementation obtain this document set.

COMMUNICATION PROFILES:

The UCA specifies a number of possibilities for communicating with electronic devices based on the OSI Reference Model. The UR relay uses the seven layer OSI stack (TP4/CLNP and TCP/IP profiles). Refer to the "UCA Version 2 Profiles" reference document for details.

The TP4/CLNP profile requires the UR relay to have a network address or Network Service Access Point (NSAP) in order to establish a communication link. The TCP/IP profile requires the UR relay to have an IP address in order to establish a communication link. These addresses are set in the **SETTINGS ⇨ PRODUCT SETUP ⇨⇩ COMMUNICATIONS ⇨⇩ NETWORK** menu. Note that the UR relay supports UCA operation over the TP4/CLNP or the TCP/IP stacks and also supports operation over both stacks simultaneously. It is possible to have up to two simultaneous connections. This is in addition to DNP and Modbus/TCP (non-UCA) connections.

C.1.2 MMS

The UCA specifies the use of the **Manufacturing Message Specification** (MMS) at the upper (Application) layer for transfer of real-time data. This protocol has been in existence for a number of years and provides a set of services suitable for the transfer of data within a substation LAN environment. Data can be grouped to form objects and be mapped to MMS services. Refer to the “GOMSFE” and “CASM” reference documents for details.

SUPPORTED OBJECTS:

The "GOMSFE" document describes a number of communication objects. Within these objects are items, some of which are mandatory and some of which are optional, depending on the implementation. The UR relay supports the following GOMSFE objects:

• DI (device identity)	• PHIZ (high impedance ground detector)
• GCTL (generic control)	• PIOC (instantaneous overcurrent relay)
• GIND (generic indicator)	• POVR (overvoltage relay)
• GLOBE (global data)	• PTOC (time overcurrent relay)
• MMXU (polyphase measurement unit)	• PUVR (under voltage relay)
• PBRL (phase balance current relay)	• PVPH (volts per hertz relay)
• PBRO (basic relay object)	• ctRATO (CT ratio information)
• PDIF (differential relay)	• vtRATO (VT ratio information)
• PDIS (distance)	• RREC (reclosing relay)
• PDOC (directional overcurrent)	• RSYN (synchronizing or synchronism-check relay)
• PFRQ (frequency relay)	• XCBR (circuit breaker)

UCA data can be accessed through the "UCADevice" MMS domain.

PEER-TO-PEER COMMUNICATION:

Peer-to-peer communication of digital state information, using the UCA GOOSE data object, is supported via the use of the UR Remote Inputs/Outputs feature. This feature allows digital points to be transferred between any UCA conforming devices.

FILE SERVICES:

MMS file services are supported to allow transfer of Oscillography, Event Record, or other files from a UR relay.

COMMUNICATION SOFTWARE UTILITIES:

The exact structure and values of the implemented objects implemented can be seen by connecting to a UR relay with an MMS browser, such as the “MMS Object Explorer and AXS4-MMS DDE/OPC” server from Sisco Inc.

NON-UCA DATA:

The UR relay makes available a number of non-UCA data items. These data items can be accessed through the "UR" MMS domain. UCA data can be accessed through the "UCADevice" MMS domain.

a) PROTOCOL IMPLEMENTATION AND CONFORMANCE STATEMENT (PICS)

NOTE

The UR relay functions as a server only; a UR relay cannot be configured as a client. Thus, the following list of supported services is for server operation only:

The MMS supported services are as follows:

CONNECTION MANAGEMENT SERVICES:

- Initiate
- Conclude
- Cancel
- Abort
- Reject

VMD SUPPORT SERVICES:

- Status
- GetNameList
- Identify

VARIABLE ACCESS SERVICES:

- Read
- Write
- InformationReport
- GetVariableAccessAttributes
- GetNamedVariableListAttributes

OPERATOR COMMUNICATION SERVICES:

(none)

SEMAPHORE MANAGEMENT SERVICES:

(none)

DOMAIN MANAGEMENT SERVICES:

- GetDomainAttributes

PROGRAM INVOCATION MANAGEMENT SERVICES:

(none)

EVENT MANAGEMENT SERVICES:

(none)

JOURNAL MANAGEMENT SERVICES:

(none)

FILE MANAGEMENT SERVICES:

- ObtainFile
- FileOpen
- FileRead
- FileClose
- FileDirectory

The following MMS parameters are supported:

- STR1 (Arrays)
- STR2 (Structures)
- NEST (Nesting Levels of STR1 and STR2) - 1
- VNAM (Named Variables)
- VADR (Unnamed Variables)
- VALT (Alternate Access Variables)
- VLIS (Named Variable Lists)
- REAL (ASN.1 REAL Type)

b) MODEL IMPLEMENTATION CONFORMANCE (MIC)

This section provides details of the UCA object models supported by the UR relay. Note that not all of the protective device functions are applicable to all UR relays.

Table C–1: DEVICE IDENTITY – DI

NAME	M/O	RWEC
Name	m	rw
Class	o	rw
d	o	rw
Own	o	rw
Loc	o	rw
VndID	m	r
CommID	o	rw

Table C–2: GENERIC CONTROL – GCTL

FC	NAME	CLASS	RWECS	DESCRIPTION
ST	BO<n>	SI	rw	Generic Single Point Indication
CO	BO<n>	SI	rw	Generic Binary Output
CF	BO<n>	SBOCF	rw	SBO Configuration
DC	LN	d	rw	Description for brick
	BO<n>	d	rw	Description for each point

NOTE

Actual instantiation of GCTL objects is as follows:

GCTL1 = Virtual Inputs (32 total points – SI1 to SI32); includes SBO functionality.

Table C–3: GENERIC INDICATOR – GIND

FC	NAME	CLASS	RWECS	DESCRIPTION
ST	SIG<n>	SIG	r	Generic Indication (block of 16)
DC	LN	d	rw	Description for brick
RP	BrcbST	BasRCB	rw	Controls reporting of STATUS

NOTE

Actual instantiation of GIND objects is as follows:

GIND1 = Contact Inputs (96 total points – SIG1 to SIG6)
GIND2 = Contact Outputs (64 total points – SIG1 to SIG4)
GIND3 = Virtual Inputs (32 total points – SIG1 to SIG2)
GIND4 = Virtual Outputs (64 total points – SIG1 to SIG4)
GIND5 = Remote Inputs (32 total points – SIG1 to SIG2)
GIND6 = Flexstates (16 total points – SIG1 representing Flexstates 1 to 16)

Table C–4: GLOBAL DATA – GLOBE

FC	OBJECT NAME	CLASS	RWECS	DESCRIPTION
ST	ModeDS	SIT	r	Device is: in test, off-line, available, or unhealthy
	LocRemDS	SIT	r	The mode of control, local or remote (DevST)
	ActSG	INT8U	r	Active Settings Group
	EditSG	INT8u	r	Settings Group selected for read/write operation
CO	CopySG	INT8U	w	Selects Settings Group for read/writer operation
	IndRs	BOOL	w	Resets ALL targets
CF	ClockTOD	BTIME	rw	Date and time
RP	GOOSE	PACT	rw	Reports IED Inputs and Ouputs

Table C–5: MEASUREMENT UNIT (POLYPHASE) – MMXU

OBJECT NAME	CLASS	RWECS	DESCRIPTION
V	WYE	rw	Voltage on phase A, B, C to G
PPV	DELTA	rw	Voltage on AB, BC, CA
A	WYE	rw	Current in phase A, B, C, and N
W	WYE	rw	Watts in phase A, B, C
TotW	AI	rw	Total watts in all three phases
Var	WYE	rw	Vars in phase A, B, C
TotVar	AI	rw	Total vars in all three phases
VA	WYE	rw	VA in phase A, B, C
TotVA	AI	rw	Total VA in all 3 phases
PF	WYE	rw	Power Factor for phase A, B, C
AvgPF	AI	rw	Average Power Factor for all three phases
Hz	AI	rw	Power system frequency
All MMXU.MX	ACF	rw	Configuration of ALL included MMXU.MX
LN	d	rw	Description for brick
All MMXU.MX	d	rw	Description of ALL included MMXU.MX
BrcbMX	BasRCB	rw	Controls reporting of measurements

NOTE

Actual instantiation of MMXU objects is as follows:

1 MMXU per Source (as determined from the ‘product order code’)

Table C–6: PROTECTIVE ELEMENTS

FC	OBJECT NAME	CLASS	RWECS	DESCRIPTION
ST	Out	BOOL	r	1 = Element operated, 2 = Element not operated
	Tar	PhsTar	r	Targets since last reset
	FctDS	SIT	r	Function is enabled/disabled
	PuGrp	INT8U	r	Settings group selected for use
CO	EnaDisFct	DCO	w	1 = Element function enabled, 0 = disabled
	RsTar	BO	w	Reset ALL Elements/Targets
	RsLat	BO	w	Reset ALL Elements/Targets
DC	LN	d	rw	Description for brick
	ElementSt	d	r	Element state string

The following GOMSFE objects are defined by the object model described via the above table:

- PBRO (basic relay object)
- PDIF (differential relay)
- PDIS (distance)
- PDOC (directional overcurrent)
- PFRQ (frequency relay)
- PHIZ (high impedance ground detector)
- PIOC (instantaneous overcurrent relay)
- POVR (over voltage relay)
- PTOC (time overcurrent relay)
- PUVR (under voltage relay)
- RSYN (synchronizing or synchronism-check relay)
- POVR (overvoltage)
- PVPH (volts per hertz relay)
- PBRL (phase balance current relay)

NOTE Actual instantiation of these objects is determined by the number of the corresponding elements present in the UR as per the ‘product order code’.

Table C–7: CT RATIO INFORMATION – ctRATO

OBJECT NAME	CLASS	RWECS	DESCRIPTION
PhsARat	RATIO	rw	Primary/secondary winding ratio
NeutARat	RATIO	rw	Primary/secondary winding ratio
LN	d	rw	Description for brick

NOTE Actual instantiation of ctRATO objects is as follows:

1 ctRATO per Source (as determined from the ‘product order code’).

Table C–8: VT RATIO INFORMATION – vtRATO

OBJECT NAME	CLASS	RWECS	DESCRIPTION
PhsVRat	RATIO	rw	Primary/secondary winding ratio
LN	d	rw	Description for brick

NOTE Actual instantiation of vtRATO objects is as follows:

1 vtRATO per Source (as determined from the ‘product order code’).

Table C–9: RECLOSING RELAY – RREC

FC	OBJECT NAME	CLASS	RWECS	DESCRIPTION
ST	Out	BOOL	r	1 = Element operated, 2 = Element not operated
	FctDS	SIT	r	Function is enabled/disabled
	PuGrp	INT8U	r	Settings group selected for use
SG	ReclSeq	SHOTS	rw	Reclosing Sequence
CO	EnaDisFct	DCO	w	1 = Element function enabled, 0 = disabled
	RsTar	BO	w	Reset ALL Elements/Targets
	RsLat	BO	w	Reset ALL Elements/Targets
CF	ReclSeq	ACF	rw	Configuration for RREC.SG
DC	LN	d	rw	Description for brick
	ElementSt	d	r	Element state string

NOTE

Actual instantiation of RREC objects is determined by the number of autoreclose elements present in the UR as per the ‘product order code’.

Also note that the SHOTS class data (i.e. Tmr1, Tmr2, Tmr3, Tmr4, RsTmr) is specified to be of type INT16S (16 bit signed integer); this data type is not large enough to properly display the full range of these settings from the UR. Numbers larger than 32768 will be displayed incorrectly.

C.1.3 UCA REPORTING

A built-in TCP/IP connection timeout of two minutes is employed by the UR to detect "dead" connections. If there is no data traffic on a TCP connection for greater than two minutes, the connection will be aborted by the UR. This frees up the connection to be used by other clients. Therefore, when using UCA reporting, clients should configure BasRCB objects such that an integrity report will be issued at least every 2 minutes (120000 ms). This ensures that the UR will not abort the connection. If other MMS data is being polled on the same connection at least once every 2 minutes, this timeout will not apply.

D.1.1 INTEROPERABILITY DOCUMENT

This document is adapted from the IEC 60870-5-104 standard. For ths section the boxes indicate the following: ☒ – used in standard direction; ☐ – not used; ■ – cannot be selected in IEC 60870-5-104 standard.

1. SYSTEM OR DEVICE:

☐ System Definition

☐ Controlling Station Definition (Master)

☒ **Controlled Station Definition (Slave)**

2. NETWORK CONFIGURATION:

■ ~~Point-to-Point~~

■ ~~Multiple Point-to-Point~~

■ ~~Multipoint~~

■ ~~Multipoint Star~~

3. PHYSICAL LAYER

Transmission Speed (control direction):

Unbalanced Interchange Circuit V.24/V.28 Standard:	Unbalanced Interchange Circuit V.24/V.28 Recommended if >1200 bits/s:	Balanced Interchange Circuit X.24/X.27:
■ ~~100 bits/sec.~~ ■ ~~200 bits/sec.~~ ■ ~~300 bits/sec.~~ ■ ~~600 bits/sec.~~ ■ ~~1200 bits/sec.~~	■ ~~2400 bits/sec.~~ ■ ~~4800 bits/sec.~~ ■ ~~9600 bits/sec.~~	■ ~~2400 bits/sec.~~ ■ ~~4800 bits/sec.~~ ■ ~~9600 bits/sec.~~ ■ ~~19200 bits/sec.~~ ■ ~~38400 bits/sec.~~ ■ ~~56000 bits/sec.~~ ■ ~~64000 bits/sec.~~

Transmission Speed (monitor direction):

Unbalanced Interchange Circuit V.24/V.28 Standard:	Unbalanced Interchange Circuit V.24/V.28 Recommended if >1200 bits/s:	Balanced Interchange Circuit X.24/X.27:
■ ~~100 bits/sec.~~ ■ ~~200 bits/sec.~~ ■ ~~300 bits/sec.~~ ■ ~~600 bits/sec.~~ ■ ~~1200 bits/sec.~~	■ ~~2400 bits/sec.~~ ■ ~~4800 bits/sec.~~ ■ ~~9600 bits/sec.~~	■ ~~2400 bits/sec.~~ ■ ~~4800 bits/sec.~~ ■ ~~9600 bits/sec.~~ ■ ~~19200 bits/sec.~~ ■ ~~38400 bits/sec.~~ ■ ~~56000 bits/sec.~~ ■ ~~64000 bits/sec.~~

4. LINK LAYER

Link Transmission Procedure:	Address Field of the Link:
■ ~~Balanced Transmision~~ ■ ~~Unbalanced Transmission~~	■ ~~Not Present (Balanced Transmission Only)~~ ■ ~~One Octet~~ ■ ~~Two Octets~~ ■ ~~Structured~~ ■ ~~Unstructured~~
Frame Length (maximum length, number of octets): Not selectable in companion IEC 60870-5-104 standard	

D

When using an unbalanced link layer, the following ADSU types are returned in class 2 messages (low priority) with the indicated causes of transmission:

- ~~The standard assignment of ADSUs to class 2 messages is used as follows~~:
- ~~A special assignment of ADSUs to class 2 messages is used as follows~~:

5. APPLICATION LAYER

Transmission Mode for Application Data:
Mode 1 (least significant octet first), as defined in Clause 4.10 of IEC 60870-5-4, is used exclusively in this companion stanadard.

Common Address of ADSU:

- ~~One Octet~~
- ☒ Two Octets

Information Object Address:

- ~~One Octet~~
- ~~Two Octets~~
- ☒ Three Octets
- ☒ Structured
- ☒ Unstructured

Cause of Transmission:

- ~~One Octet~~
- ☒ Two Octets (with originator address). Originator address is set to zero if not used.

Maximum Length of APDU: 253 (the maximum length may be reduced by the system.

Selection of standard ASDUs:

For the following lists, the boxes indicate the following: ☒ – used in standard direction; ☐ – not used; ■ – cannot be selected in IEC 60870-5-104 standard.

Process information in monitor direction

☒ <1> := Single-point information	M_SP_NA_1
~~■ <2> := Single-point information with time tag~~	~~M_SP_TA_1~~
☐ <3> := Double-point information	M_DP_NA_1
~~■ <4> := Double-point information with time tag~~	~~M_DP_TA_1~~
☐ <5> := Step position information	M_ST_NA_1
~~■ <6> := Step position information with time tag~~	~~M_ST_TA_1~~
☐ <7> := Bitstring of 32 bits	M_BO_NA_1
~~■ <8> := Bitstring of 32 bits with time tag~~	~~M_BO_TA_1~~
☐ <9> := Measured value, normalized value	M_ME_NA_1
~~■ <10> := Measured value, normalized value with time tag~~	~~M_NE_TA_1~~
☐ <11> := Measured value, scaled value	M_ME_NB_1
~~■ <12> := Measured value, scaled value with time tag~~	~~M_NE_TB_1~~
☒ <13> := Measured value, short floating point value	M_ME_NC_1
~~■ <14> := Measured value, short floating point value with time tag~~	~~M_NE_TC_1~~
☒ <15> := Integrated totals	M_IT_NA_1
~~■ <16> := Integrated totals with time tag~~	~~M_IT_TA_1~~
~~■ <17> := Event of protection equipment with time tag~~	~~M_EP_TA_1~~
~~■ <18> := Packed start events of protection equipment with time tag~~	~~M_EP_TB_1~~
~~■ <19> := Packed output circuit information of protection equipment with time tag~~	~~M_EP_TC_1~~
☐ <20> := Packed single-point information with status change detection	M_SP_NA_1

☐ <21> := Measured value, normalized value without quantity descriptor	M_ME_ND_1
☒ <30> := Single-point information with time tag CP56Time2a	M_SP_TB_1
☐ <31> := Double-point information wiht time tag CP56Time2a	M_DP_TB_1
☐ <32> := Step position information with time tag CP56Time2a	M_ST_TB_1
☐ <33> := Bitstring of 32 bits with time tag CP56Time2a	M_BO_TB_1
☐ <34> := Measured value, normalized value with time tag CP56Time2a	M_ME_TD_1
☐ <35> := Measured value, scaled value with time tag CP56Time2a	M_ME_TE_1
☐ <36> := Measured value, short floating point value with time tag CP56Time2a	M_ME_TF_1
☒ <37> := Integrated totals with time tag CP56Time2a	M_IT_TB_1
☐ <38> := Event of protection equipment with time tag CP56Time2a	M_EP_TD_1
☐ <39> := Packed start events of protection equipment with time tag CP56Time2a	M_EP_TE_1
☐ <40> := Packed output circuit information of protection equipment with time tag CP56Time2a	M_EP_TF_1

Either the ASDUs of the set <2>, <4>, <6>, <8>, <10>, <12>, <14>, <16>, <17>, <18>, and <19> or of the set <30> to <40> are used.

Process information in control direction

☒ <45> := Single command	C_SC_NA_1
☐ <46> := Double command	C_DC_NA_1
☐ <47> := Regulating step command	C_RC_NA_1
☐ <48> := Set point command, normalized value	C_SE_NA_1
☐ <49> := Set point command, scaled value	C_SE_NB_1
☐ <50> := Set point command, short floating point value	C_SE_NC_1
☐ <51> := Bitstring of 32 bits	C_BO_NA_1
☒ <58> := Single command with time tag CP56Time2a	C_SC_TA_1
☐ <59> := Double command with time tag CP56Time2a	C_DC_TA_1
☐ <60> := Regulating step command with time tag CP56Time2a	C_RC_TA_1
☐ <61> := Set point command, normalized value with time tag CP56Time2a	C_SE_TA_1
☐ <62> := Set point command, scaled value with time tag CP56Time2a	C_SE_TB_1
☐ <63> := Set point command, short floating point value with time tag CP56Time2a	C_SE_TC_1
☐ <64> := Bitstring of 32 bits with time tag CP56Time2a	C_BO_TA_1

Either the ASDUs of the set <45> to <51> or of the set <58> to <64> are used.

System information in monitor direction

☒ <70> := End of initialization	M_EI_NA_1

System information in control direction

☒ <100> := Interrogation command	C_IC_NA_1
☒ <101> := Counter interrogation command	C_CI_NA_1
☒ <102> := Read command	C_RD_NA_1
☒ <103> := Clock synchronization command (see Clause 7.6 in standard)	C_CS_NA_1
■ ~~<104> := Test command~~	~~C_TS_NA_1~~
☒ <105> := Reset process command	C_RP_NA_1
■ <106> := Delay acquisition command	C_CD_NA_1
☒ <107> := Test command with time tag CP56Time2a	C_TS_TA_1

Parameter in control direction

- ☐ <110> := Parameter of measured value, normalized value — PE_ME_NA_1
- ☐ <111> := Parameter of measured value, scaled value — PE_ME_NB_1
- ☒ <112> := Parameter of measured value, short floating point value — PE_ME_NC_1
- ☐ <113> := Parameter activation — PE_AC_NA_1

File transfer

- ☐ <120> := File Ready — F_FR_NA_1
- ☐ <121> := Section Ready — F_SR_NA_1
- ☐ <122> := Call directory, select file, call file, call section — F_SC_NA_1
- ☐ <123> := Last section, last segment — F_LS_NA_1
- ☐ <124> := Ack file, ack section — F_AF_NA_1
- ☐ <125> := Segment — F_SG_NA_1
- ☐ <126> := Directory (blank or X, available only in monitor [standard] direction) — C_CD_NA_1

D

Type identifier and cause of transmission assignments
(station-specific parameters)

In the following table:

- Shaded boxes are not required.
- Black boxes are not permitted in this companion standard.
- Blank boxes indicate functions or ASDU not used.
- '**X**' if only used in the standard direction

TYPE IDENTIFICATION		CAUSE OF TRANSMISSION																		
		PERIODIC, CYCLIC	BACKGROUND SCAN	SPONTANEOUS	INITIALIZED	REQUEST OR REQUESTED	ACTIVATION	ACTIVATION CONFIRMATION	DEACTIVATION	DEACTIVATION CONFIRMATION	ACTIVATION TERMINATION	RETURN INFO CAUSED BY LOCAL CMD	FILE TRANSFER	INTERROGATED BY GROUP <NUMBER>	REQUEST BY GROUP <N> COUNTER REQ	UNKNOWN TYPE IDENTIFICATION	UNKNOWN CAUSE OF TRANSMISSION	UNKNOWN COMMON ADDRESS OF ADSU	UNKNOWN INFORMATION OBJECT ADDR	UNKNOWN INFORMATION OBJECT ADDR
NO.	**MNEMONIC**	**1**	**2**	**3**	**4**	**5**	**6**	**7**	**8**	**9**	**10**	**11**	**12**	**13**	**20 to 36**	**37 to 41**	**44**	**45**	**46**	**47**
<1>	M_SP_NA_1			X		X						X	X		X					
<2>	M_SP_TA_1																			
<3>	M_DP_NA_1																			
<4>	M_DP_TA_1																			
<5>	M_ST_NA_1																			
<6>	M_ST_TA_1																			
<7>	M_BO_NA_1																			
<8>	M_BO_TA_1																			

TYPE IDENTIFICATION		CAUSE OF TRANSMISSION																		
		PERIODIC, CYCLIC	BACKGROUND SCAN	SPONTANEOUS	INITIALIZED	REQUEST OR REQUESTED	ACTIVATION	ACTIVATION CONFIRMATION	DEACTIVATION	DEACTIVATION CONFIRMATION	ACTIVATION TERMINATION	RETURN INFO CAUSED BY LOCAL CMD	FILE TRANSFER	INTERROGATED BY GROUP <NUMBER>	REQUEST BY GROUP <N> COUNTER REQ	UNKNOWN TYPE IDENTIFICATION	UNKNOWN CAUSE OF TRANSMISSION	UNKNOWN COMMON ADDRESS OF ADSU	UNKNOWN INFORMATION OBJECT ADDR	UNKNOWN INFORMATION OBJECT ADDR
NO.	MNEMONIC	1	2	3	4	5	6	7	8	9	10	11	12	13	20 to 36	37 to 41	44	45	46	47
<9>	M_ME_NA_1																			
<10>	M_ME_TA_1																			
<11>	M_ME_NB_1																			
<12>	M_ME_TB_1																			
<13>	M_ME_NC_1	X		X		X									X					
<14>	M_ME_TC_1																			
<15>	M_IT_NA_1			X												X				
<16>	M_IT_TA_1																			
<17>	M_EP_TA_1																			
<18>	M_EP_TB_1																			
<19>	M_EP_TC_1																			
<20>	M_PS_NA_1																			
<21>	M_ME_ND_1																			
<30>	M_SP_TB_1			X								X	X							
<31>	M_DP_TB_1																			
<32>	M_ST_TB_1																			
<33>	M_BO_TB_1																			
<34>	M_ME_TD_1																			
<35>	M_ME_TE_1																			
<36>	M_ME_TF_1																			
<37>	M_IT_TB_1			X												X				
<38>	M_EP_TD_1																			
<39>	M_EP_TE_1																			
<40>	M_EP_TF_1																			
<45>	C_SC_NA_1						X	X	X	X	X									
<46>	C_DC_NA_1																			
<47>	C_RC_NA_1																			
<48>	C_SE_NA_1																			
<49>	C_SE_NB_1																			

D

D

TYPE IDENTIFICATION		CAUSE OF TRANSMISSION																		
		PERIODIC, CYCLIC	BACKGROUND SCAN	SPONTANEOUS	INITIALIZED	REQUEST OR REQUESTED	ACTIVATION	ACTIVATION CONFIRMATION	DEACTIVATION	DEACTIVATION CONFIRMATION	ACTIVATION TERMINATION	RETURN INFO CAUSED BY LOCAL CMD	FILE TRANSFER	INTERROGATED BY GROUP <NUMBER>	REQUEST BY GROUP <N> COUNTER REQ	UNKNOWN TYPE IDENTIFICATION	UNKNOWN CAUSE OF TRANSMISSION	UNKNOWN COMMON ADDRESS OF ADSU	UNKNOWN INFORMATION OBJECT ADDR	UNKNOWN INFORMATION OBJECT ADDR
NO.	MNEMONIC	1	2	3	4	5	6	7	8	9	10	11	12	13	20 to 36	37 to 41	44	45	46	47
<50>	C_SE_NC_1																			
<51>	C_BO_NA_1																			
<58>	C_SC_TA_1						X	X	X	X	X									
<59>	C_DC_TA_1																			
<60>	C_RC_TA_1																			
<61>	C_SE_TA_1																			
<62>	C_SE_TB_1																			
<63>	C_SE_TC_1																			
<64>	C_BO_TA_1																			
<70>	M_EI_NA_1*)				X															
<100>	C_IC_NA_1						X	X	X	X	X									
<101>	C_CI_NA_1						X	X			X									
<102>	C_RD_NA_1					X														
<103>	C_CS_NA_1			X			X	X												
<104>	C_TS_NA_1																			
<105>	C_RP_NA_1						X	X												
<106>	C_CD_NA_1																			
<107>	C_TS_TA_1																			
<110>	P_ME_NA_1																			
<111>	P_ME_NB_1																			
<112>	P_ME_NC_1						X	X							X					
<113>	P_AC_NA_1																			
<120>	F_FR_NA_1																			
<121>	F_SR_NA_1																			
<122>	F_SC_NA_1																			
<123>	F_LS_NA_1																			
<124>	F_AF_NA_1																			
<125>	F_SG_NA_1																			
<126>	F_DR_TA_1*)																			

6. BASIC APPLICATION FUNCTIONS

Station Initialization:

- ☒ Remote initialization

Cyclic Data Transmission:

- ☒ Cyclic data transmission

Read Procedure:

- ☒ Read procedure

Spontaneous Transmission:

- ☒ Spontaneous transmission

Double transmission of information objects with cause of transmission spontaneous:

The following type identifications may be transmitted in succession caused by a single status change of an information object. The particular information object addresses for which double transmission is enabled are defined in a project-specific list.

- ☐ Single point information: M_SP_NA_1, M_SP_TA_1, M_SP_TB_1, and M_PS_NA_1
- ☐ Double point information: M_DP_NA_1, M_DP_TA_1, and M_DP_TB_1
- ☐ Step position information: M_ST_NA_1, M_ST_TA_1, and M_ST_TB_1
- ☐ Bitstring of 32 bits: M_BO_NA_1, M_BO_TA_1, and M_BO_TB_1 (if defined for a specific project)
- ☐ Measured value, normalized value: M_ME_NA_1, M_ME_TA_1, M_ME_ND_1, and M_ME_TD_1
- ☐ Measured value, scaled value: M_ME_NB_1, M_ME_TB_1, and M_ME_TE_1
- ☐ Measured value, short floating point number: M_ME_NC_1, M_ME_TC_1, and M_ME_TF_1

Station interrogation:

- ☒ Global

☒ Group 1	☒ Group 5	☒ Group 9	☒ Group 13
☒ Group 2	☒ Group 6	☒ Group 10	☒ Group 14
☒ Group 3	☒ Group 7	☒ Group 11	☒ Group 15
☒ Group 4	☒ Group 8	☒ Group 12	☒ Group 16

Clock synchronization:

- ☒ Clock synchronization (optional, see Clause 7.6)

Command transmission:

- ☒ Direct command transmission
- ☐ Direct setpoint command transmission
- ☒ Select and execute command
- ☐ Select and execute setpoint command
- ☒ C_SE ACTTERM used
- ☒ No additional definition
- ☒ Short pulse duration (duration determined by a system parameter in the outstation)
- ☒ Long pulse duration (duration determined by a system parameter in the outstation)
- ☒ Persistent output

- ☒ Supervision of maximum delay in command direction of commands and setpoint commands

Maximum allowable delay of commands and setpoint commands: **10 s**

Transmission of integrated totals:

- ☒ Mode A: Local freeze with spontaneous transmission
- ☒ Mode B: Local freeze with counter interrogation
- ☒ Mode C: Freeze and transmit by counter-interrogation commands
- ☒ Mode D: Freeze by counter-interrogation command, frozen values reported simultaneously

- ☒ Counter read
- ☒ Counter freeze without reset
- ☒ Counter freeze with reset
- ☒ Counter reset

- ☒ General request counter
- ☒ Request counter group 1
- ☒ Request counter group 2
- ☒ Request counter group 3
- ☒ Request counter group 4

D

Parameter loading:

- ☒ Threshold value
- ☐ Smoothing factor
- ☐ Low limit for transmission of measured values
- ☐ High limit for transmission of measured values

Parameter activation:

- ☐ Activation/deactivation of persistent cyclic or periodic transmission of the addressed object

Test procedure:

- ☐ Test procedure

File transfer:

File transfer in monitor direction:

- ☐ Transparent file
- ☐ Transmission of disturbance data of protection equipment
- ☐ Transmission of sequences of events
- ☐ Transmission of sequences of recorded analog values

File transfer in control direction:

- ☐ Transparent file

Background scan:

- ☐ Background scan

Acquisition of transmission delay:

- ■ ~~Acquisition of transmission delay~~

Definition of time outs:

PARAMETER	DEFAULT VALUE	REMARKS	SELECTED VALUE
t_0	30 s	Timeout of connection establishment	120 s
t_1	15 s	Timeout of send or test APDUs	15 s
t_2	10 s	Timeout for acknowlegements in case of no data messages $t_2 < t_1$	10 s
t_3	20 s	Timeout for sending test frames in case of a long idle state	20 s

Maximum range of values for all time outs: 1 to 255 s, accuracy 1 s

Maximum number of outstanding I-format APDUs *k* and latest acknowledge APDUs (*w*):

PARAMETER	DEFAULT VALUE	REMARKS	SELECTED VALUE
k	12 APDUs	Maximum difference receive sequence number to send state variable	12 APDUs
w	8 APDUs	Latest acknowledge after receiving *w* I-format APDUs	8 APDUs

Maximum range of values *k*: 1 to 32767 (2^{15} – 1) APDUs, accuracy 1 APDU

Maximum range of values *w*: 1 to 32767 APDUs, accuracy 1 APDU
Recommendation: *w* should not exceed two-thirds of *k*.

Portnumber:

PARAMETER	VALUE	REMARKS
Portnumber	2404	In all cases

RFC 2200 suite:

RFC 2200 is an official Internet Standard which describes the state of standardization of protocols used in the Internet as determined by the Internet Architecture Board (IAB). It offers a broad spectrum of actual standards used in the Internet. The suitable selection of documents from RFC 2200 defined in this standard for given projects has to be chosen by the user of this standard.

- ☒ Ethernet 802.3
- ☐ Serial X.21 interface
- ☐ Other selection(s) from RFC 2200 (list below if selected)

D

D

Table D–1: IEC 60870-5-104 POINTS (Sheet 1 of 3)

POINT	DESCRIPTION	UNITS
M_ME_NC_1 Points		
2000	SRC 1 Phase A Current RMS	A
2001	SRC 1 Phase B Current RMS	A
2002	SRC 1 Phase C Current RMS	A
2003	SRC 1 Neutral Current RMS	A
2004	SRC 1 Phase A Current Magnitude	A
2005	SRC 1 Phase A Current Angle	degrees
2006	SRC 1 Phase B Current Magnitude	A
2007	SRC 1 Phase B Current Angle	degrees
2008	SRC 1 Phase C Current Magnitude	A
2009	SRC 1 Phase C Current Angle	degrees
2010	SRC 1 Neutral Current Magnitude	A
2011	SRC 1 Neutral Current Angle	degrees
2012	SRC 1 Ground Current RMS	A
2013	SRC 1 Ground Current Magnitude	A
2014	SRC 1 Ground Current Angle	degrees
2015	SRC 1 Zero Sequence Current Magnitude	A
2016	SRC 1 Zero Sequence Current Angle	degrees
2017	SRC 1 Positive Sequence Current Magnitude	A
2018	SRC 1 Positive Sequence Current Angle	degrees
2019	SRC 1 Negative Sequence Current Magnitude	A
2020	SRC 1 Negative Sequence Current Angle	degrees
2021	SRC 1 Differential Ground Current Magnitude	A
2022	SRC 1 Differential Ground Current Angle	degrees
2023	SRC 1 Phase AG Voltage RMS	V
2024	SRC 1 Phase BG Voltage RMS	V
2025	SRC 1 Phase CG Voltage RMS	V
2026	SRC 1 Phase AG Voltage Magnitude	V
2027	SRC 1 Phase AG Voltage Angle	degrees
2028	SRC 1 Phase BG Voltage Magnitude	V
2029	SRC 1 Phase BG Voltage Angle	degrees
2030	SRC 1 Phase CG Voltage Magnitude	V
2031	SRC 1 Phase CG Voltage Angle	degrees
2032	SRC 1 Phase AB Voltage RMS	V
2033	SRC 1 Phase BC Voltage RMS	V
2034	SRC 1 Phase CA Voltage RMS	V
2035	SRC 1 Phase AB Voltage Magnitude	V
2036	SRC 1 Phase AB Voltage Angle	degrees
2037	SRC 1 Phase BC Voltage Magnitude	V
2038	SRC 1 Phase BC Voltage Angle	degrees
2039	SRC 1 Phase CA Voltage Magnitude	V
2040	SRC 1 Phase CA Voltage Angle	degrees
2041	SRC 1 Auxiliary Voltage RMS	V
2042	SRC 1 Auxiliary Voltage Magnitude	V
2043	SRC 1 Auxiliary Voltage Angle	degrees
2044	SRC 1 Zero Sequence Voltage Magnitude	V

Table D–1: IEC 60870-5-104 POINTS (Sheet 2 of 3)

POINT	DESCRIPTION	UNITS
2045	SRC 1 Zero Sequence Voltage Angle	degrees
2046	SRC 1 Positive Sequence Voltage Magnitude	V
2047	SRC 1 Positive Sequence Voltage Angle	degrees
2048	SRC 1 Negative Sequence Voltage Magnitude	V
2049	SRC 1 Negative Sequence Voltage Angle	degrees
2050	SRC 1 Three Phase Real Power	W
2051	SRC 1 Phase A Real Power	W
2052	SRC 1 Phase B Real Power	W
2053	SRC 1 Phase C Real Power	W
2054	SRC 1 Three Phase Reactive Power	var
2055	SRC 1 Phase A Reactive Power	var
2056	SRC 1 Phase B Reactive Power	var
2057	SRC 1 Phase C Reactive Power	var
2058	SRC 1 Three Phase Apparent Power	VA
2059	SRC 1 Phase A Apparent Power	VA
2060	SRC 1 Phase B Apparent Power	VA
2061	SRC 1 Phase C Apparent Power	VA
2062	SRC 1 Three Phase Power Factor	none
2063	SRC 1 Phase A Power Factor	none
2064	SRC 1 Phase B Power Factor	none
2065	SRC 1 Phase C Power Factor	none
2066	SRC 1 Positive Watthour	Wh
2067	SRC 1 Negative Watthour	Wh
2068	SRC 1 Positive Varhour	varh
2069	SRC 1 Negative Varhour	varh
2070	SRC 1 Frequency	Hz
2071	SRC 1 Demand Ia	A
2072	SRC 1 Demand Ib	A
2073	SRC 1 Demand Ic	A
2074	SRC 1 Demand Watt	W
2075	SRC 1 Demand Var	var
2076	SRC 1 Demand Va	VA
2077	Tracking Frequency	Hz
2078	FlexElement 1 Actual	none
2079	FlexElement 2 Actual	none
2080	FlexElement 3 Actual	none
2081	FlexElement 4 Actual	none
2082	FlexElement 5 Actual	none
2083	FlexElement 6 Actual	none
2084	FlexElement 7 Actual	none
2085	FlexElement 8 Actual	none
2086	FlexElement 9 Actual	none
2087	FlexElement 10 Actual	none
2088	FlexElement 11 Actual	none
2089	FlexElement 12 Actual	none
2090	FlexElement 13 Actual	none

Table D–1: IEC 60870-5-104 POINTS (Sheet 3 of 3)

POINT	DESCRIPTION	UNITS
2091	FlexElement 14 Actual	none
2092	FlexElement 15 Actual	none
2093	FlexElement 16 Actual	none
2094	Current Setting Group	none
P_ME_NC_1 Points		
5000 - 5094	Threshold values for M_ME_NC_1 points	-
M_SP_NA_1 Points		
100-115	Virtual Input States[0]	-
116-131	Virtual Input States[1]	-
132-147	Virtual Output States[0]	-
148-163	Virtual Output States[1]	-
164-179	Virtual Output States[2]	-
180-195	Virtual Output States[3]	-
196-211	Contact Input States[0]	-
212-227	Contact Input States[1]	-
228-243	Contact Input States[2]	-
244-259	Contact Input States[3]	-
260-275	Contact Input States[4]	-
276-291	Contact Input States[5]	-
292-307	Contact Output States[0]	-
308-323	Contact Output States[1]	-
324-339	Contact Output States[2]	-
340-355	Contact Output States[3]	-
356-371	Remote Input x States[0]	-
372-387	Remote Input x States[1]	-
388-403	Remote Device x States	-
404-419	LED Column x State[0]	-
420-435	LED Column x State[1]	-
C_SC_NA_1 Points		
1100 - 1115	Virtual Input States[0] - No Select Required	-
1116 - 1131	Virtual Input States[1] - Select Required	-
M_IT_NA_1 Points		
4000	Digital Counter 1 Value	-
4001	Digital Counter 2 Value	-
4002	Digital Counter 3 Value	-
4003	Digital Counter 4 Value	-
4004	Digital Counter 5 Value	-
4005	Digital Counter 6 Value	-
4006	Digital Counter 7 Value	-
4007	Digital Counter 8 Value	-

E.1.1 DNP V3.00 DEVICE PROFILE

The following table provides a “Device Profile Document” in the standard format defined in the DNP 3.0 Subset Definitions Document.

Table E–1: DNP V3.00 DEVICE PROFILE (Sheet 1 of 3)

(Also see the IMPLEMENTATION TABLE in the following section)	
Vendor Name: **General Electric Power Management**	
Device Name: **UR Series Relay**	
Highest DNP Level Supported: For Requests: **Level 2** For Responses: **Level 2**	**Device Function:** ☐ Master ☒ **Slave**
Notable objects, functions, and/or qualifiers supported in addition to the Highest DNP Levels Supported (the complete list is described in the attached table): **Binary Inputs (Object 1)** **Binary Input Changes (Object 2)** **Binary Outputs (Object 10)** **Binary Counters (Object 20)** **Frozen Counters (Object 21)** **Counter Change Event (Object 22)** **Frozen Counter Event (Object 23)** **Analog Inputs (Object 30)** **Analog Input Changes (Object 32)** **Analog Deadbands (Object 34)**	
Maximum Data Link Frame Size (octets): Transmitted: **292** Received: **292**	**Maximum Application Fragment Size (octets):** Transmitted: **240** Received: **2048**
Maximum Data Link Re-tries: ☐ **None** ☒ Fixed at 2 ☐ Configurable	**Maximum Application Layer Re-tries:** ☒ None ☐ Configurable
Requires Data Link Layer Confirmation: ☒ Never ☐ Always ☐ Sometimes ☐ Configurable	

E

Table E–1: DNP V3.00 DEVICE PROFILE (Sheet 2 of 3)

Requires Application Layer Confirmation:

- ☐ Never
- ☐ Always
- ☒ When reporting Event Data
- ☒ When sending multi-fragment responses
- ☐ Sometimes
- ☐ Configurable

Timeouts while waiting for:

Data Link Confirm:	☐ None	☒ **Fixed at 3 s**	☐ Variable	☐ Configurable
Complete Appl. Fragment:	☒ **None**	☐ Fixed at ____	☐ Variable	☐ Configurable
Application Confirm:	☐ None	☒ **Fixed at 4 s**	☐ Variable	☐ Configurable
Complete Appl. Response:	☒ **None**	☐ Fixed at ____	☐ Variable	☐ Configurable

Others:

Transmission Delay:	**No intentional delay**
Inter-character Timeout:	**50 ms**
Need Time Delay:	**Configurable (default = 24 hrs.)**
Select/Operate Arm Timeout:	**10 s**
Binary input change scanning period:	**8 times per power system cycle**
Packed binary change process period:	**1 s**
Analog input change scanning period:	**500 ms**
Counter change scanning period:	**500 ms**
Frozen counter event scanning period:	**500 ms**
Unsolicited response notification delay:	**500 ms**
Unsolicited response retry delay	**configurable 0 to 60 sec.**

Sends/Executes Control Operations:

WRITE Binary Outputs	☒ **Never**	☐ Always	☐ Sometimes	☐ Configurable
SELECT/OPERATE	☐ Never	☒ **Always**	☐ Sometimes	☐ Configurable
DIRECT OPERATE	☐ Never	☒ **Always**	☐ Sometimes	☐ Configurable
DIRECT OPERATE – NO ACK	☐ Never	☒ **Always**	☐ Sometimes	☐ Configurable

Count > 1	☒ **Never**	☐ Always	☐ Sometimes	☐ Configurable
Pulse On	☐ Never	☐ Always	☒ **Sometimes**	☐ Configurable
Pulse Off	☐ Never	☐ Always	☒ **Sometimes**	☐ Configurable
Latch On	☐ Never	☐ Always	☒ **Sometimes**	☐ Configurable
Latch Off	☐ Never	☐ Always	☒ **Sometimes**	☐ Configurable

Queue	☒ **Never**	☐ Always	☐ Sometimes	☐ Configurable
Clear Queue	☒ **Never**	☐ Always	☐ Sometimes	☐ Configurable

Explanation of 'Sometimes': Object 12 points are mapped to UR Virtual Inputs. The persistence of Virtual Inputs is determined by the **VIRTUAL INPUT X TYPE** settings. Both "Pulse On" and "Latch On" operations perform the same function in the UR; that is, the appropriate Virtual Input is put into the "On" state. If the Virtual Input is set to "Self-Reset", it will reset after one pass of FlexLogic™. The On/Off times and Count value are ignored. "Pulse Off" and "Latch Off" operations put the appropriate Virtual Input into the "Off" state. "Trip" and "Close" operations both put the appropriate Virtual Input into the "On" state.

E

Table E–1: DNP V3.00 DEVICE PROFILE (Sheet 3 of 3)

Reports Binary Input Change Events when no specific variation requested: ☐ Never ☒ **Only time-tagged** ☐ Only non-time-tagged ☐ Configurable	**Reports time-tagged Binary Input Change Events when no specific variation requested:** ☐ Never ☒ Binary Input Change With Time ☐ Binary Input Change With Relative Time ☐ Configurable (attach explanation)
Sends Unsolicited Responses: ☐ **Never** ☒ Configurable ☐ Only certain objects ☐ Sometimes (attach explanation) ☒ ENABLE/DISABLE unsolicited Function codes supported	**Sends Static Data in Unsolicited Responses:** ☒ Never ☐ When Device Restarts ☐ When Status Flags Change No other options are permitted.
Default Counter Object/Variation: ☐ No Counters Reported ☐ Configurable (attach explanation) ☒ **Default Object: 20** **Default Variation: 1** ☒ **Point-by-point list attached**	**Counters Roll Over at:** ☐ No Counters Reported ☐ Configurable (attach explanation) ☒ **16 Bits (Counter 8)** ☒ **32 Bits (Counters 0 to 7, 9)** ☐ Other Value: _____ ☒ **Point-by-point list attached**
Sends Multi-Fragment Responses: ☒ **Yes** ☐ No	

E

E.2.1 IMPLEMENTATION TABLE

The following table identifies the variations, function codes, and qualifiers supported by the UR in both request messages and in response messages. For static (non-change-event) objects, requests sent with qualifiers 00, 01, 06, 07, or 08, will be responded with qualifiers 00 or 01. Static object requests sent with qualifiers 17 or 28 will be responded with qualifiers 17 or 28. For change-event objects, qualifiers 17 or 28 are always responded.

Table E–2: IMPLEMENTATION TABLE (Sheet 1 of 4)

OBJECT			REQUEST		RESPONSE	
OBJECT NO.	VARIATION NO.	DESCRIPTION	FUNCTION CODES (DEC)	QUALIFIER CODES (HEX)	FUNCTION CODES (DEC)	QUALIFIER CODES (HEX)
1	0	Binary Input (Variation 0 is used to request default variation)	1 (read) 22 (assign class)	00, 01 (start-stop) 06 (no range, or all) 07, 08 (limited qty) 17, 28 (index)		
	1	Binary Input	1 (read) 22 (assign class)	00, 01 (start-stop) 06 (no range, or all) 07, 08 (limited qty) 17, 28 (index)	129 (response)	00, 01 (start-stop) 17, 28 (index) *(see Note 2)*
	2	Binary Input with Status *(default – see Note 1)*	1 (read) 22 (assign class)	00, 01 (start-stop) 06 (no range, or all) 07, 08 (limited qty) 17, 28 (index)	129 (response)	00, 01 (start-stop) 17, 28 (index) *(see Note 2)*
2	0	Binary Input Change (Variation 0 is used to request default variation)	1 (read)	06 (no range, or all) 07, 08 (limited qty)		
	1	Binary Input Change without Time	1 (read)	06 (no range, or all) 07, 08 (limited qty)	129 (response) 130 (unsol. resp.)	17, 28 (index)
	2	Binary Input Change with Time *(default – see Note 1)*	1 (read)	06 (no range, or all) 07, 08 (limited qty)	129 (response 130 (unsol. resp.)	17, 28 (index)
10	0	Binary Output Status (Variation 0 is used to request default variation)	1 (read)	00, 01(start-stop) 06 (no range, or all) 07, 08 (limited qty) 17, 28 (index)		
	2	Binary Output Status *(default – see Note 1)*	1 (read)	00, 01 (start-stop) 06 (no range, or all) 07, 08 (limited qty) 17, 28 (index)	129 (response)	00, 01 (start-stop) 17, 28 (index) *(see Note 2)*
12	1	Control Relay Output Block	3 (select) 4 (operate) 5 (direct op) 6 (dir. op, noack)	00, 01 (start-stop) 07, 08 (limited qty) 17, 28 (index)	129 (response)	echo of request
20	0	Binary Counter (Variation 0 is used to request default variation)	1 (read) 7 (freeze) 8 (freeze noack) 9 (freeze clear) 10 (frz. cl. noack) 22 (assign class)	00, 01(start-stop) 06(no range, or all) 07, 08(limited qty) 17, 28(index)		
	1	32-Bit Binary Counter *(default – see Note 1)*	1 (read) 7 (freeze) 8 (freeze noack) 9 (freeze clear) 10 (frz. cl. noack) 22 (assign class)	00, 01 (start-stop) 06 (no range, or all) 07, 08 (limited qty) 17, 28 (index)	129 (response)	00, 01 (start-stop) 17, 28 (index) *(see Note 2)*

Note 1: A Default variation refers to the variation responded when variation 0 is requested and/or in class 0, 1, 2, or 3 scans. Type 30 (Analog Input) data is limited to data that is actually possible to be used in the UR, based on the product order code. For example, Signal Source data from source numbers that cannot be used is not included. This optimizes the class 0 poll data size.

Note 2: For static (non-change-event) objects, qualifiers 17 or 28 are only responded when a request is sent with qualifiers 17 or 28, respectively. Otherwise, static object requests sent with qualifiers 00, 01, 06, 07, or 08, will be responded with qualifiers 00 or 01 (for change-event objects, qualifiers 17 or 28 are always responded.)

Note 3: Cold restarts are implemented the same as warm restarts – the UR is not restarted, but the DNP process is restarted.

Table E–2: IMPLEMENTATION TABLE (Sheet 2 of 4)

OBJECT			REQUEST		RESPONSE	
OBJECT NO.	VARIATION NO.	DESCRIPTION	FUNCTION CODES (DEC)	QUALIFIER CODES (HEX)	FUNCTION CODES (DEC)	QUALIFIER CODES (HEX)
20 con't	2	16-Bit Binary Counter	1 (read) 7 (freeze) 8 (freeze noack) 9 (freeze clear) 10 (frz. cl. noack) 22 (assign class)	00, 01 (start-stop) 06 (no range, or all) 07, 08 (limited qty) 17, 28 (index)	129 (response)	00, 01 (start-stop) 17, 28 (index) *(see Note 2)*
	5	32-Bit Binary Counter without Flag	1 (read) 7 (freeze) 8 (freeze noack) 9 (freeze clear) 10 (frz. cl. noack) 22 (assign class)	00, 01 (start-stop) 06 (no range, or all) 07, 08 (limited qty) 17, 28 (index)	129 (response)	00, 01 (start-stop) 17, 28 (index) *(see Note 2)*
	6	16-Bit Binary Counter without Flag	1 (read) 7 (freeze) 8 (freeze noack) 9 (freeze clear) 10 (frz. cl. noack) 22 (assign class)	00, 01 (start-stop) 06 (no range, or all) 07, 08 (limited qty) 17, 28 (index)	129 (response)	00, 01 (start-stop) 17, 28 (index) *(see Note 2)*
21	0	Frozen Counter (Variation 0 is used to request default variation)	1 (read) 22 (assign class)	00, 01 (start-stop) 06 (no range, or all) 07, 08 (limited qty) 17, 28 (index)		
	1	32-Bit Frozen Counter *(default – see Note 1)*	1 (read) 22 (assign class)	00, 01 (start-stop) 06 (no range, or all) 07, 08 (limited qty) 17, 28 (index)	129 (response)	00, 01 (start-stop) 17, 28 (index) *(see Note 2)*
	2	16-Bit Frozen Counter	1 (read) 22 (assign class)	00, 01 (start-stop) 06 (no range, or all) 07, 08 (limited qty) 17, 28 (index)	129 (response)	00, 01 (start-stop) 17, 28 (index) *(see Note 2)*
	9	32-Bit Frozen Counter without Flag	1 (read) 22 (assign class)	00, 01 (start-stop) 06 (no range, or all) 07, 08 (limited qty) 17, 28 (index)	129 (response)	00, 01 (start-stop) 17, 28 (index) *(see Note 2)*
	10	16-Bit Frozen Counter without Flag	1 (read) 22 (assign class)	00, 01 (start-stop) 06 (no range, or all) 07, 08 (limited qty) 17, 28 (index)	129 (response)	00, 01 (start-stop) 17, 28 (index) *(see Note 2)*
22	0	Counter Change Event (Variation 0 is used to request default variation)	1 (read)	06 (no range, or all) 07, 08 (limited qty)		
	1	32-Bit Counter Change Event *(default – see Note 1)*	1 (read)	06 (no range, or all) 07, 08 (limited qty)	129 (response) 130 (unsol. resp.)	17, 28 (index)
	5	32-Bit Counter Change Event with Time	1 (read)	06 (no range, or all) 07, 08 (limited qty)	129 (response) 130 (unsol. resp.)	17, 28 (index)
23	0	Frozen Counter Event (Variation 0 is used to request default variation)	1 (read)	06 (no range, or all) 07, 08 (limited qty)		
	1	32-Bit Frozen Counter Event *(default – see Note 1)*	1 (read)	06 (no range, or all) 07, 08 (limited qty)	129 (response) 130 (unsol. resp.)	17, 28 (index)
	5	32-Bit Frozen Counter Event with Time	1 (read)	06 (no range, or all) 07, 08 (limited qty)	129 (response) 130 (unsol. resp.)	17, 28 (index)

Note 1: A Default variation refers to the variation responded when variation 0 is requested and/or in class 0, 1, 2, or 3 scans. Type 30 (Analog Input) data is limited to data that is actually possible to be used in the UR, based on the product order code. For example, Signal Source data from source numbers that cannot be used is not included. This optimizes the class 0 poll data size.

Note 2: For static (non-change-event) objects, qualifiers 17 or 28 are only responded when a request is sent with qualifiers 17 or 28, respectively. Otherwise, static object requests sent with qualifiers 00, 01, 06, 07, or 08, will be responded with qualifiers 00 or 01 (for change-event objects, qualifiers 17 or 28 are always responded.)

Note 3: Cold restarts are implemented the same as warm restarts – the UR is not restarted, but the DNP process is restarted.

Table E–2: IMPLEMENTATION TABLE (Sheet 3 of 4)

OBJECT			REQUEST		RESPONSE	
OBJECT NO.	VARIATION NO.	DESCRIPTION	FUNCTION CODES (DEC)	QUALIFIER CODES (HEX)	FUNCTION CODES (DEC)	QUALIFIER CODES (HEX)
30	0	Analog Input (Variation 0 is used to request default variation)	1 (read) 22 (assign class)	00, 01 (start-stop) 06 (no range, or all) 07, 08 (limited qty) 17, 28 (index)		
	1	32-Bit Analog Input *(default – see Note 1)*	1 (read) 22 (assign class)	00, 01 (start-stop) 06 (no range, or all) 07, 08 (limited qty) 17, 28 (index)	129 (response)	00, 01 (start-stop) 17, 28 (index) *(see Note 2)*
	2	16-Bit Analog Input	1 (read) 22 (assign class)	00, 01 (start-stop) 06 (no range, or all) 07, 08 (limited qty) 17, 28 (index)	129 (response)	00, 01 (start-stop) 17, 28 (index) *(see Note 2)*
	3	32-Bit Analog Input without Flag	1 (read) 22 (assign class)	00, 01 (start-stop) 06 (no range, or all) 07, 08 (limited qty) 17, 28 (index)	129 (response)	00, 01 (start-stop) 17, 28 (index) *(see Note 2)*
	4	16-Bit Analog Input without Flag	1 (read) 22 (assign class)	00, 01 (start-stop) 06 (no range, or all) 07, 08 (limited qty) 17, 28 (index)	129 (response)	00, 01 (start-stop) 17, 28 (index) *(see Note 2)*
	5	short floating point	1 (read) 22 (assign class)	00, 01 (start-stop) 06(no range, or all) 07, 08(limited qty) 17, 28(index)	129 (response)	00, 01 (start-stop) 17, 28 (index) *(see Note 2)*
32	0	Analog Change Event (Variation 0 is used to request default variation)	1 (read)	06 (no range, or all) 07, 08 (limited qty)		
	1	32-Bit Analog Change Event without Time *(default – see Note 1)*	1 (read)	06 (no range, or all) 07, 08 (limited qty)	129 (response) 130 (unsol. resp.)	17, 28 (index)
	2	16-Bit Analog Change Event without Time	1 (read)	06 (no range, or all) 07, 08 (limited qty)	129 (response) 130 (unsol. resp.)	17, 28 (index)
	3	32-Bit Analog Change Event with Time	1 (read)	06 (no range, or all) 07, 08 (limited qty)	129 (response) 130 (unsol. resp.)	17, 28 (index)
	4	16-Bit Analog Change Event with Time	1 (read)	06 (no range, or all) 07, 08 (limited qty)	129 (response) 130 (unsol. resp.)	17, 28 (index)
	5	short floating point Analog Change Event without Time	1 (read)	06 (no range, or all) 07, 08 (limited qty)	129 (response) 130 (unsol. resp.)	17, 28 (index)
	7	short floating point Analog Change Event with Time	1 (read)	06 (no range, or all) 07, 08 (limited qty)	129 (response) 130 (unsol. resp.)	17, 28 (index)
34	0	Analog Input Reporting Deadband (Variation 0 is used to request default variation)	1 (read)	00, 01 (start-stop) 06 (no range, or all) 07, 08 (limited qty) 17, 28 (index)		
	1	16-bit Analog Input Reporting Deadband (default – see Note 1)	1 (read)	00, 01 (start-stop) 06 (no range, or all) 07, 08 (limited qty) 17, 28 (index)	129 (response)	00, 01 (start-stop) 17, 28 (index) *(see Note 2)*
			2 (write)	00, 01 (start-stop) 07, 08 (limited qty) 17, 28 (index)		

Note 1: A Default variation refers to the variation responded when variation 0 is requested and/or in class 0, 1, 2, or 3 scans. Type 30 (Analog Input) data is limited to data that is actually possible to be used in the UR, based on the product order code. For example, Signal Source data from source numbers that cannot be used is not included. This optimizes the class 0 poll data size.

Note 2: For static (non-change-event) objects, qualifiers 17 or 28 are only responded when a request is sent with qualifiers 17 or 28, respectively. Otherwise, static object requests sent with qualifiers 00, 01, 06, 07, or 08, will be responded with qualifiers 00 or 01 (for change-event objects, qualifiers 17 or 28 are always responded.)

Note 3: Cold restarts are implemented the same as warm restarts – the UR is not restarted, but the DNP process is restarted.

Table E–2: IMPLEMENTATION TABLE (Sheet 4 of 4)

OBJECT			REQUEST		RESPONSE	
OBJECT NO.	VARIATION NO.	DESCRIPTION	FUNCTION CODES (DEC)	QUALIFIER CODES (HEX)	FUNCTION CODES (DEC)	QUALIFIER CODES (HEX)
34 con't	2	32-bit Analog Input Reporting Deadband (default – see Note 1)	1 (read)	00, 01 (start-stop) 06 (no range, or all) 07, 08 (limited qty) 17, 28 (index)	129 (response)	00, 01 (start-stop) 17, 28 (index) *(see Note 2)*
			2 (write)	00, 01 (start-stop) 07, 08 (limited qty) 17, 28 (index)		
	3	Short floating point Analog Input Reporting Deadband	1 (read)	00, 01 (start-stop) 06 (no range, or all) 07, 08 (limited qty) 17, 28 (index)	129 (response)	00, 01 (start-stop) 17, 28 (index) *(see Note 2)*
50	0	Time and Date	1 (read)	00, 01 (start-stop) 06 (no range, or all) 07, 08 (limited qty) 17, 28 (index)	129 (response)	00, 01 (start-stop) 17, 28 (index) *(see Note 2)*
	1	Time and Date (default – see Note 1)	1 (read) 2 (write)	00, 01 (start-stop) 06 (no range, or all) 07 (limited qty=1) 08 (limited qty) 17, 28 (index)	129 (response)	00, 01 (start-stop) 17, 28 (index) *(see Note 2)*
52	2	Time Delay Fine			129 (response)	07 (limited qty) (qty = 1)
60	0	Class 0, 1, 2, and 3 Data	1 (read) 20 (enable unsol) 21 (disable unsol) 22 (assign class)	06 (no range, or all)		
	1	Class 0 Data	1 (read) 22 (assign class)	06 (no range, or all)		
	2	Class 1 Data	1 (read) 20 (enable unsol) 21 (disable unsol) 22 (assign class)	06 (no range, or all) 07, 08 (limited qty)		
	3	Class 2 Data	1 (read) 20 (enable unsol) 21 (disable unsol) 22 (assign class)	06 (no range, or all) 07, 08 (limited qty)		
	4	Class 3 Data	1 (read) 20 (enable unsol) 21 (disable unsol) 22 (assign class)	06 (no range, or all) 07, 08 (limited qty)		
80	1	Internal Indications	2 (write)	00 (start-stop) (index must =7)		
---		No Object (function code only) *see Note 3*	13 (cold restart)			
---		No Object (function code only)	14 (warm restart)			
---		No Object (function code only)	23 (delay meas.)			

Note 1: A Default variation refers to the variation responded when variation 0 is requested and/or in class 0, 1, 2, or 3 scans. Type 30 (Analog Input) data is limited to data that is actually possible to be used in the UR, based on the product order code. For example, Signal Source data from source numbers that cannot be used is not included. This optimizes the class 0 poll data size.

Note 2: For static (non-change-event) objects, qualifiers 17 or 28 are only responded when a request is sent with qualifiers 17 or 28, respectively. Otherwise, static object requests sent with qualifiers 00, 01, 06, 07, or 08, will be responded with qualifiers 00 or 01 (for change-event objects, qualifiers 17 or 28 are always responded.)

Note 3: Cold restarts are implemented the same as warm restarts – the UR is not restarted, but the DNP process is restarted.

E.3.1 BINARY INPUT POINTS

The following table lists both Binary Counters (Object 20) and Frozen Counters (Object 21). When a freeze function is performed on a Binary Counter point, the frozen value is available in the corresponding Frozen Counter point.

BINARY INPUT POINTS

Static (Steady-State) Object Number: **1**

Change Event Object Number: **2**

Request Function Codes supported: **1 (read), 22 (assign class)**

Static Variation reported when variation 0 requested: **2 (Binary Input with status)**

Change Event Variation reported when variation 0 requested: **2 (Binary Input Change with Time)**

Change Event Scan Rate: **8 times per power system cycle**

Change Event Buffer Size: **1000**

Table E–3: BINARY INPUTS (Sheet 1 of 10)

POINT INDEX	NAME/DESCRIPTION	CHANGE EVENT CLASS (1/2/3/NONE)
0	Virtual Input 1	2
1	Virtual Input 2	2
2	Virtual Input 3	2
3	Virtual Input 4	2
4	Virtual Input 5	2
5	Virtual Input 6	2
6	Virtual Input 7	2
7	Virtual Input 8	2
8	Virtual Input 9	2
9	Virtual Input 10	2
10	Virtual Input 11	2
11	Virtual Input 12	2
12	Virtual Input 13	2
13	Virtual Input 14	2
14	Virtual Input 15	2
15	Virtual Input 16	2
16	Virtual Input 17	2
17	Virtual Input 18	2
18	Virtual Input 19	2
19	Virtual Input 20	2
20	Virtual Input 21	2
21	Virtual Input 22	2
22	Virtual Input 23	2
23	Virtual Input 24	2
24	Virtual Input 25	2
25	Virtual Input 26	2
26	Virtual Input 27	2
27	Virtual Input 28	2
28	Virtual Input 29	2
29	Virtual Input 30	2
30	Virtual Input 31	2
31	Virtual Input 32	2

Table E–3: BINARY INPUTS (Sheet 2 of 10)

POINT INDEX	NAME/DESCRIPTION	CHANGE EVENT CLASS (1/2/3/NONE)
32	Virtual Output 1	2
33	Virtual Output 2	2
34	Virtual Output 3	2
35	Virtual Output 4	2
36	Virtual Output 5	2
37	Virtual Output 6	2
38	Virtual Output 7	2
39	Virtual Output 8	2
40	Virtual Output 9	2
41	Virtual Output 10	2
42	Virtual Output 11	2
43	Virtual Output 12	2
44	Virtual Output 13	2
45	Virtual Output 14	2
46	Virtual Output 15	2
47	Virtual Output 16	2
48	Virtual Output 17	2
49	Virtual Output 18	2
50	Virtual Output 19	2
51	Virtual Output 20	2
52	Virtual Output 21	2
53	Virtual Output 22	2
54	Virtual Output 23	2
55	Virtual Output 24	2
56	Virtual Output 25	2
57	Virtual Output 26	2
58	Virtual Output 27	2
59	Virtual Output 28	2
60	Virtual Output 29	2
61	Virtual Output 30	2
62	Virtual Output 31	2
63	Virtual Output 32	2

Table E–3: BINARY INPUTS (Sheet 3 of 10)

POINT INDEX	NAME/DESCRIPTION	CHANGE EVENT CLASS (1/2/3/NONE)
64	Virtual Output 33	2
65	Virtual Output 34	2
66	Virtual Output 35	2
67	Virtual Output 36	2
68	Virtual Output 37	2
69	Virtual Output 38	2
70	Virtual Output 39	2
71	Virtual Output 40	2
72	Virtual Output 41	2
73	Virtual Output 42	2
74	Virtual Output 43	2
75	Virtual Output 44	2
76	Virtual Output 45	2
77	Virtual Output 46	2
78	Virtual Output 47	2
79	Virtual Output 48	2
80	Virtual Output 49	2
81	Virtual Output 50	2
82	Virtual Output 51	2
83	Virtual Output 52	2
84	Virtual Output 53	2
85	Virtual Output 54	2
86	Virtual Output 55	2
87	Virtual Output 56	2
88	Virtual Output 57	2
89	Virtual Output 58	2
90	Virtual Output 59	2
91	Virtual Output 60	2
92	Virtual Output 61	2
93	Virtual Output 62	2
94	Virtual Output 63	2
95	Virtual Output 64	2
96	Contact Input 1	1
97	Contact Input 2	1
98	Contact Input 3	1
99	Contact Input 4	1
100	Contact Input 5	1
101	Contact Input 6	1
102	Contact Input 7	1
103	Contact Input 8	1
104	Contact Input 9	1
105	Contact Input 10	1
106	Contact Input 11	1
107	Contact Input 12	1
108	Contact Input 13	1
109	Contact Input 14	1
110	Contact Input 15	1
111	Contact Input 16	1
112	Contact Input 17	1
113	Contact Input 18	1
114	Contact Input 19	1

Table E–3: BINARY INPUTS (Sheet 4 of 10)

POINT INDEX	NAME/DESCRIPTION	CHANGE EVENT CLASS (1/2/3/NONE)
115	Contact Input 20	1
116	Contact Input 21	1
117	Contact Input 22	1
118	Contact Input 23	1
119	Contact Input 24	1
120	Contact Input 25	1
121	Contact Input 26	1
122	Contact Input 27	1
123	Contact Input 28	1
124	Contact Input 29	1
125	Contact Input 30	1
126	Contact Input 31	1
127	Contact Input 32	1
128	Contact Input 33	1
129	Contact Input 34	1
130	Contact Input 35	1
131	Contact Input 36	1
132	Contact Input 37	1
133	Contact Input 38	1
134	Contact Input 39	1
135	Contact Input 40	1
136	Contact Input 41	1
137	Contact Input 42	1
138	Contact Input 43	1
139	Contact Input 44	1
140	Contact Input 45	1
141	Contact Input 46	1
142	Contact Input 47	1
143	Contact Input 48	1
144	Contact Input 49	1
145	Contact Input 50	1
146	Contact Input 51	1
147	Contact Input 52	1
148	Contact Input 53	1
149	Contact Input 54	1
150	Contact Input 55	1
151	Contact Input 56	1
152	Contact Input 57	1
153	Contact Input 58	1
154	Contact Input 59	1
155	Contact Input 60	1
156	Contact Input 61	1
157	Contact Input 62	1
158	Contact Input 63	1
159	Contact Input 64	1
160	Contact Input 65	1
161	Contact Input 66	1
162	Contact Input 67	1
163	Contact Input 68	1
164	Contact Input 69	1
165	Contact Input 70	1

Table E–3: BINARY INPUTS (Sheet 5 of 10)

POINT INDEX	NAME/DESCRIPTION	CHANGE EVENT CLASS (1/2/3/NONE)
166	Contact Input 71	1
167	Contact Input 72	1
168	Contact Input 73	1
169	Contact Input 74	1
170	Contact Input 75	1
171	Contact Input 76	1
172	Contact Input 77	1
173	Contact Input 78	1
174	Contact Input 79	1
175	Contact Input 80	1
176	Contact Input 81	1
177	Contact Input 82	1
178	Contact Input 83	1
179	Contact Input 84	1
180	Contact Input 85	1
181	Contact Input 86	1
182	Contact Input 87	1
183	Contact Input 88	1
184	Contact Input 89	1
185	Contact Input 90	1
186	Contact Input 91	1
187	Contact Input 92	1
188	Contact Input 93	1
189	Contact Input 94	1
190	Contact Input 95	1
191	Contact Input 96	1
192	Contact Output 1	1
193	Contact Output 2	1
194	Contact Output 3	1
195	Contact Output 4	1
196	Contact Output 5	1
197	Contact Output 6	1
198	Contact Output 7	1
199	Contact Output 8	1
200	Contact Output 9	1
201	Contact Output 10	1
202	Contact Output 11	1
203	Contact Output 12	1
204	Contact Output 13	1
205	Contact Output 14	1
206	Contact Output 15	1
207	Contact Output 16	1
208	Contact Output 17	1
209	Contact Output 18	1
210	Contact Output 19	1
211	Contact Output 20	1
212	Contact Output 21	1
213	Contact Output 22	1
214	Contact Output 23	1
215	Contact Output 24	1
216	Contact Output 25	1

Table E–3: BINARY INPUTS (Sheet 6 of 10)

POINT INDEX	NAME/DESCRIPTION	CHANGE EVENT CLASS (1/2/3/NONE)
217	Contact Output 26	1
218	Contact Output 27	1
219	Contact Output 28	1
220	Contact Output 29	1
221	Contact Output 30	1
222	Contact Output 31	1
223	Contact Output 32	1
224	Contact Output 33	1
225	Contact Output 34	1
226	Contact Output 35	1
227	Contact Output 36	1
228	Contact Output 37	1
229	Contact Output 38	1
230	Contact Output 39	1
231	Contact Output 40	1
232	Contact Output 41	1
233	Contact Output 42	1
234	Contact Output 43	1
235	Contact Output 44	1
236	Contact Output 45	1
237	Contact Output 46	1
238	Contact Output 47	1
239	Contact Output 48	1
240	Contact Output 49	1
241	Contact Output 50	1
242	Contact Output 51	1
243	Contact Output 52	1
244	Contact Output 53	1
245	Contact Output 54	1
246	Contact Output 55	1
247	Contact Output 56	1
248	Contact Output 57	1
249	Contact Output 58	1
250	Contact Output 59	1
251	Contact Output 60	1
252	Contact Output 61	1
253	Contact Output 62	1
254	Contact Output 63	1
255	Contact Output 64	1
256	Remote Input 1	1
257	Remote Input 2	1
258	Remote Input 3	1
259	Remote Input 4	1
260	Remote Input 5	1
261	Remote Input 6	1
262	Remote Input 7	1
263	Remote Input 8	1
264	Remote Input 9	1
265	Remote Input 10	1
266	Remote Input 11	1
267	Remote Input 12	1

Table E–3: BINARY INPUTS (Sheet 7 of 10)

POINT INDEX	NAME/DESCRIPTION	CHANGE EVENT CLASS (1/2/3/NONE)
268	Remote Input 13	1
269	Remote Input 14	1
270	Remote Input 15	1
271	Remote Input 16	1
272	Remote Input 17	1
273	Remote Input 18	1
274	Remote Input 19	1
275	Remote Input 20	1
276	Remote Input 21	1
277	Remote Input 22	1
278	Remote Input 23	1
279	Remote Input 24	1
280	Remote Input 25	1
281	Remote Input 26	1
282	Remote Input 27	1
283	Remote Input 28	1
284	Remote Input 29	1
285	Remote Input 30	1
286	Remote Input 31	1
287	Remote Input 32	1
288	Remote Device 1	1
289	Remote Device 2	1
290	Remote Device 3	1
291	Remote Device 4	1
292	Remote Device 5	1
293	Remote Device 6	1
294	Remote Device 7	1
295	Remote Device 8	1
296	Remote Device 9	1
297	Remote Device 10	1
298	Remote Device 11	1
299	Remote Device 12	1
300	Remote Device 13	1
301	Remote Device 14	1
302	Remote Device 15	1
303	Remote Device 16	1
304	PHASE IOC1 Element OP	1
305	PHASE IOC2 Element OP	1
306	PHASE IOC3 Element OP	1
307	PHASE IOC4 Element OP	1
308	PHASE IOC5 Element OP	1
309	PHASE IOC6 Element OP	1
310	PHASE IOC7 Element OP	1
311	PHASE IOC8 Element OP	1
312	PHASE IOC9 Element OP	1
313	PHASE IOC10 Element OP	1
314	PHASE IOC11 Element OP	1
315	PHASE IOC12 Element OP	1
320	PHASE TOC1 Element OP	1
321	PHASE TOC2 Element OP	1
322	PHASE TOC3 Element OP	1

Table E–3: BINARY INPUTS (Sheet 8 of 10)

POINT INDEX	NAME/DESCRIPTION	CHANGE EVENT CLASS (1/2/3/NONE)
323	PHASE TOC4 Element OP	1
324	PHASE TOC5 Element OP	1
325	PHASE TOC6 Element OP	1
336	NEUTRAL IOC1 Element OP	1
337	NEUTRAL IOC2 Element OP	1
338	NEUTRAL IOC3 Element OP	1
339	NEUTRAL IOC4 Element OP	1
340	NEUTRAL IOC5 Element OP	1
341	NEUTRAL IOC6 Element OP	1
342	NEUTRAL IOC7 Element OP	1
343	NEUTRAL IOC8 Element OP	1
344	NEUTRAL IOC9 Element OP	1
345	NEUTRAL IOC10 Element OP	1
346	NEUTRAL IOC11 Element OP	1
347	NEUTRAL IOC12 Element OP	1
352	NEUTRAL TOC1 Element OP	1
353	NEUTRAL TOC2 Element OP	1
354	NEUTRAL TOC3 Element OP	1
355	NEUTRAL TOC4 Element OP	1
356	NEUTRAL TOC5 Element OP	1
357	NEUTRAL TOC6 Element OP	1
368	GROUND IOC1 Element OP	1
369	GROUND IOC2 Element OP	1
370	GROUND IOC3 Element OP	1
371	GROUND IOC4 Element OP	1
372	GROUND IOC5 Element OP	1
373	GROUND IOC6 Element OP	1
374	GROUND IOC7 Element OP	1
375	GROUND IOC8 Element OP	1
376	GROUND IOC9 Element OP	1
377	GROUND IOC10 Element OP	1
378	GROUND IOC11 Element OP	1
379	GROUND IOC12 Element OP	1
384	GROUND TOC1 Element OP	1
385	GROUND TOC2 Element OP	1
386	GROUND TOC3 Element OP	1
387	GROUND TOC4 Element OP	1
388	GROUND TOC5 Element OP	1
389	GROUND TOC6 Element OP	1
444	AUX UV1 Element OP	1
448	PHASE UV1 Element OP	1
449	PHASE UV2 Element OP	1
452	AUX OV1 Element OP	1
460	NEUTRAL OV1 Element OP	1
608	AR 1 Element OP	1
609	AR 2 Element OP	1
610	AR 3 Element OP	1
611	AR 4 Element OP	1
612	AR 5 Element OP	1
613	AR 6 Element OP	1
640	SETTING GROUP Element OP	1

Table E–3: BINARY INPUTS (Sheet 9 of 10)

POINT INDEX	NAME/DESCRIPTION	CHANGE EVENT CLASS (1/2/3/NONE)
641	RESET Element OP	1
656	UNDERFREQ 1 Element OP	1
657	UNDERFREQ 2 Element OP	1
658	UNDERFREQ 3 Element OP	1
659	UNDERFREQ 4 Element OP	1
660	UNDERFREQ 5 Element OP	1
661	UNDERFREQ 6 Element OP	1
704	FLEXELEMENT 1 Element OP	1
705	FLEXELEMENT 2 Element OP	1
706	FLEXELEMENT 3 Element OP	1
707	FLEXELEMENT 4 Element OP	1
708	FLEXELEMENT 5 Element OP	1
709	FLEXELEMENT 6 Element OP	1
710	FLEXELEMENT 7 Element OP	1
711	FLEXELEMENT 8 Element OP	1
816	DIG ELEM 1 Element OP	1
817	DIG ELEM 2 Element OP	1
818	DIG ELEM 3 Element OP	1
819	DIG ELEM 4 Element OP	1
820	DIG ELEM 5 Element OP	1
821	DIG ELEM 6 Element OP	1
822	DIG ELEM 7 Element OP	1
823	DIG ELEM 8 Element OP	1
824	DIG ELEM 9 Element OP	1
825	DIG ELEM 10 Element OP	1
826	DIG ELEM 11 Element OP	1
827	DIG ELEM 12 Element OP	1
828	DIG ELEM 13 Element OP	1
829	DIG ELEM 14 Element OP	1
830	DIG ELEM 15 Element OP	1
831	DIG ELEM 16 Element OP	1
864	LED State 1 (IN SERVICE)	1
865	LED State 2 (TROUBLE)	1
866	LED State 3 (TEST MODE)	1
867	LED State 4 (TRIP)	1
868	LED State 5 (ALARM)	1
869	LED State 6(PICKUP)	1
880	LED State 9 (VOLTAGE)	1
881	LED State 10 (CURRENT)	1
882	LED State 11 (FREQUENCY)	1
883	LED State 12 (OTHER)	1
884	LED State 13 (PHASE A)	1
885	LED State 14 (PHASE B)	1
886	LED State 15 (PHASE C)	1
887	LED State 16 (NTL/GROUND)	1
899	BATTERY FAIL	1
900	PRI ETHERNET FAIL	1
901	SEC ETHERNET FAIL	1
902	EPROM DATA ERROR	1
903	SRAM DATA ERROR	1
904	PROGRAM MEMORY	1

Table E–3: BINARY INPUTS (Sheet 10 of 10)

POINT INDEX	NAME/DESCRIPTION	CHANGE EVENT CLASS (1/2/3/NONE)
905	WATCHDOG ERROR	1
906	LOW ON MEMORY	1
907	REMOTE DEVICE OFF	1
910	Any Major Error	1
911	Any Minor Error	1
912	Any Self-Tests	1
913	IRIG-B FAILURE	1
914	DSP ERROR	1
915	Not Used	
916	NO DSP INTERUPTS	1
917	UNIT NOT CALIBRATED	1
921	PROTOTYPE FIRMWARE	1
922	FLEXLOGIC ERR TOKEN	1
923	EQUIPMENT MISMATCH	1
925	UNIT NOT PROGRAMMED	1
926	SYSTEM EXCEPTION	1

E.3.2 BINARY OUTPUT AND CONTROL RELAY OUTPUT

Supported Control Relay Output Block fields: Pulse On, Pulse Off, Latch On, Latch Off, Paired Trip, Paired Close.

BINARY OUTPUT STATUS POINTS
Object Number: **10**
Request Function Codes supported: **1 (read)**
Default Variation reported when variation 0 requested: **2 (Binary Output Status)**
CONTROL RELAY OUTPUT BLOCKS
Object Number: **12**
Request Function Codes supported: **3 (select), 4 (operate), 5 (direct operate),6 (direct operate, noack)**

Table E–4: BINARY/CONTROL OUTPUT POINT LIST

POINT INDEX	NAME/DESCRIPTION
0	Virtual Input 1
1	Virtual Input 2
2	Virtual Input 3
3	Virtual Input 4
4	Virtual Input 5
5	Virtual Input 6
6	Virtual Input 7
7	Virtual Input 8
8	Virtual Input 9
9	Virtual Input 10
10	Virtual Input 11
11	Virtual Input 12
12	Virtual Input 13
13	Virtual Input 14
14	Virtual Input 15
15	Virtual Input 16
16	Virtual Input 17
17	Virtual Input 18
18	Virtual Input 19
19	Virtual Input 20
20	Virtual Input 21
21	Virtual Input 22
22	Virtual Input 23
23	Virtual Input 24
24	Virtual Input 25
25	Virtual Input 26
26	Virtual Input 27
27	Virtual Input 28
28	Virtual Input 29
29	Virtual Input 30
30	Virtual Input 31
31	Virtual Input 32

E.3.3 COUNTERS

The following table lists both Binary Counters (Object 20) and Frozen Counters (Object 21). When a freeze function is performed on a Binary Counter point, the frozen value is available in the corresponding Frozen Counter point.

BINARY COUNTERS

Static (Steady-State) Object Number: **20**

Change Event Object Number: **22**

Request Function Codes supported: **1 (read), 7 (freeze), 8 (freeze noack), 9 (freeze and clear), 10 (freeze and clear, noack), 22 (assign class)**

Static Variation reported when variation 0 requested: **1 (32-Bit Binary Counter with Flag)**

Change Event Variation reported when variation 0 requested: **1 (32-Bit Counter Change Event without time)**

Change Event Buffer Size: **10**

Default Class for all points: **2**

FROZEN COUNTERS

Static (Steady-State) Object Number: **21**

Change Event Object Number: **23**

Request Function Codes supported: **1 (read)**

Static Variation reported when variation 0 requested: **1 (32-Bit Frozen Counter with Flag)**

Change Event Variation reported when variation 0 requested: **1 (32-Bit Frozen Counter Event without time)**

Change Event Buffer Size: **10**

Default Class for all points: **2**

E

Table E–5: BINARY and FROZEN COUNTERS

POINT INDEX	NAME/DESCRIPTION
0	Digital Counter 1
1	Digital Counter 2
2	Digital Counter 3
3	Digital Counter 4
4	Digital Counter 5
5	Digital Counter 6
6	Digital Counter 7

Table E–5: BINARY and FROZEN COUNTERS

POINT INDEX	NAME/DESCRIPTION
7	Digital Counter 8
8	Oscillography Trigger Count
9	Events Since Last Clear

Note that a counter freeze command has no meaning for counters 8 and 9.

E.3.4 ANALOG INPUTS

The following table lists Analog Inputs (Object 30). It is important to note that 16-bit and 32-bit variations of Analog Inputs are transmitted through DNP as signed numbers. Even for analog input points that are not valid as negative values, the maximum positive representation is 32767. This is a DNP requirement.

The deadbands for all Analog Input points are in the same units as the Analog Input quantity. For example, an Analog Input quantity measured in volts has a corresponding deadband in units of volts. This is in conformance with DNP Technical Bulletin 9809-001 Analog Input Reporting Deadband. Relay settings are available to set default deadband values according to data type. Deadbands for individual Analog Input Points can be set using DNP Object 34.

When using the UR in DNP systems with limited memory, the ANALOG INPUT POINTS LIST below may be replaced with a user-definable list. This user-definable list uses the same settings as the Modbus User Map and can be configured with the MODBUS USER MAP settings. When used with DNP, each entry in the Modbus User Map represents the starting Modbus address of a data item available as a DNP Analog Input point. To enable use of the Modbus User Map for DNP Analog Input points, set the **USER MAP FOR DNP ANALOGS** setting to Enabled (this setting is in the **PRODUCT SETUP ⇨⇩ COMMUNICATIONS ⇨⇩ DNP PROTOCOL** menu). The new DNP Analog points list can be checked via the "DNP Analog Input Points List" webpage, accessible from the "Device Information menu" webpage.

NOTE

After changing the **USER MAP FOR DNP ANALOGS** setting, the relay must be powered off and then back on for the setting to take effect.

Only Source 1 data points are shown in the following table. If the **NUMBER OF SOURCES IN ANALOG LIST** setting is increased, data points for subsequent sources will be added to the list immediately following the Source 1 data points.

Units for Analog Input points are as follows:

- Current: A
- Voltage: V
- Real Power: W
- Reactive Power: var
- Apparent Power: VA
- Energy Wh, varh
- Frequency: Hz
- Angle: degrees
- Ohm Input: Ohms
- RTD Input: degrees C

Static (Steady-State) Object Number: **30**

Change Event Object Number: **32**

Request Function Codes supported: **1 (read), 2 (write, deadbands only), 22 (assign class)**

Static Variation reported when variation 0 requested: **1 (32-Bit Analog Input)**

Change Event Variation reported when variation 0 requested: **1 (Analog Change Event w/o Time)**

Change Event Scan Rate: defaults to **500 ms.**

Change Event Buffer Size: **800**

Default Class for all Points: **1**

E

Table E–6: ANALOG INPUT POINTS (Sheet 1 of 2)

POINT	DESCRIPTION
0	SRC 1 Phase A Current RMS
1	SRC 1 Phase B Current RMS
2	SRC 1 Phase C Current RMS
3	SRC 1 Neutral Current RMS
4	SRC 1 Phase A Current Magnitude
5	SRC 1 Phase A Current Angle
6	SRC 1 Phase B Current Magnitude
7	SRC 1 Phase B Current Angle
8	SRC 1 Phase C Current Magnitude
9	SRC 1 Phase C Current Angle
10	SRC 1 Neutral Current Magnitude
11	SRC 1 Neutral Current Angle
12	SRC 1 Ground Current RMS
13	SRC 1 Ground Current Magnitude
14	SRC 1 Ground Current Angle
15	SRC 1 Zero Sequence Current Magnitude
16	SRC 1 Zero Sequence Current Angle
17	SRC 1 Positive Sequence Current Magnitude
18	SRC 1 Positive Sequence Current Angle
19	SRC 1 Negative Sequence Current Magnitude
20	SRC 1 Negative Sequence Current Angle
21	SRC 1 Differential Ground Current Magnitude
22	SRC 1 Differential Ground Current Angle
23	SRC 1 Phase AG Voltage RMS
24	SRC 1 Phase BG Voltage RMS
25	SRC 1 Phase CG Voltage RMS
26	SRC 1 Phase AG Voltage Magnitude
27	SRC 1 Phase AG Voltage Angle
28	SRC 1 Phase BG Voltage Magnitude
29	SRC 1 Phase BG Voltage Angle
30	SRC 1 Phase CG Voltage Magnitude
31	SRC 1 Phase CG Voltage Angle
32	SRC 1 Phase AB Voltage RMS
33	SRC 1 Phase BC Voltage RMS
34	SRC 1 Phase CA Voltage RMS
35	SRC 1 Phase AB Voltage Magnitude
36	SRC 1 Phase AB Voltage Angle
37	SRC 1 Phase BC Voltage Magnitude
38	SRC 1 Phase BC Voltage Angle
39	SRC 1 Phase CA Voltage Magnitude
40	SRC 1 Phase CA Voltage Angle
41	SRC 1 Auxiliary Voltage RMS
42	SRC 1 Auxiliary Voltage Magnitude
43	SRC 1 Auxiliary Voltage Angle
44	SRC 1 Zero Sequence Voltage Magnitude
45	SRC 1 Zero Sequence Voltage Angle
46	SRC 1 Positive Sequence Voltage Magnitude
47	SRC 1 Positive Sequence Voltage Angle
48	SRC 1 Negative Sequence Voltage Magnitude

Table E–6: ANALOG INPUT POINTS (Sheet 2 of 2)

POINT	DESCRIPTION
49	SRC 1 Negative Sequence Voltage Angle
50	SRC 1 Three Phase Real Power
51	SRC 1 Phase A Real Power
52	SRC 1 Phase B Real Power
53	SRC 1 Phase C Real Power
54	SRC 1 Three Phase Reactive Power
55	SRC 1 Phase A Reactive Power
56	SRC 1 Phase B Reactive Power
57	SRC 1 Phase C Reactive Power
58	SRC 1 Three Phase Apparent Power
59	SRC 1 Phase A Apparent Power
60	SRC 1 Phase B Apparent Power
61	SRC 1 Phase C Apparent Power
62	SRC 1 Three Phase Power Factor
63	SRC 1 Phase A Power Factor
64	SRC 1 Phase B Power Factor
65	SRC 1 Phase C Power Factor
66	SRC 1 Positive Watthour
67	SRC 1 Negative Watthour
68	SRC 1 Positive Varhour
69	SRC 1 Negative Varhour
70	SRC 1 Frequency
71	SRC 1 Demand Ia
72	SRC 1 Demand Ib
73	SRC 1 Demand Ic
74	SRC 1 Demand Watt
75	SRC 1 Demand Var
76	SRC 1 Demand Va
77	Tracking Frequency
78	FlexElement 1 Actual
79	FlexElement 2 Actual
80	FlexElement 3 Actual
81	FlexElement 4 Actual
82	FlexElement 5 Actual
83	FlexElement 6 Actual
84	FlexElement 7 Actual
85	FlexElement 8 Actual
86	FlexElement 9 Actual
87	FlexElement 10 Actual
88	FlexElement 11 Actual
89	FlexElement 12 Actual
90	FlexElement 13 Actual
91	FlexElement 14 Actual
92	FlexElement 15 Actual
93	FlexElement 16 Actual
94	Current Setting Group

F.1.1 REVISION HISTORY

MANUAL P/N	F35 REVISION	RELEASE DATE	ECO
1601-0106-A1	2.0X	24 December 1999	N/A
1601-0106-A2	2.2X	12 May 2000	URF-018
1601-0106-A3	2.2X	14 June 2000	URF-019
1601-0106-A3a	2.2X	28 June 2000	URF-019a
1601-0106-B1	2.4X	08 September 2000	URF-021
1601-0106-B2	2.4X	03 November 2000	URF-023
1601-0106-B3	2.6X	09 March 2001	URF-026
1601-0106-B4	2.8X	26 September 2001	URF-028
1601-0106-B5	2.9X	03 December 2001	URF-029

F.1.2 CHANGES TO F35 MANUAL

Table F–1: CHANGES TO F35 MANUAL REVISION B5

PAGE (B4)	CHANGE	DESCRIPTION
Title	Update	Manual part number from B4 to B5
5-31	Update	Updated FLEXLOGIC™ OPERANDS table
8-	Update	Chapter 10: COMMISSIONING updated to reflect settings changes for revision 2.9X firmware
B-11	Update	MODBUS MEMORY MAP updated for version 2.9X firmware
D-1	Add	Added IEC 60870-5-104 INTEROPERABILITY DOCUMENT

Table F–2: CHANGES TO F35 MANUAL REVISION B4

PAGE (B3)	CHANGE	DESCRIPTION
Title	Update	Manual part number from B3 to B4
2-1	Update	Updated SINGLE LINE DIAGRAM to 832738A7
2-2	Update	Updated ANSI DEVICE NUMBERS AND FUNCTIONS table
2-3	Update	Updated ORDER CODES table
2-4	Update	Updated ORDER CODES FOR REPLACEMENT MODULES table
2-5	Add	Added specifications for AUXILIARY OVERVOLTAGE, AUXLIARY UNDERVOLTAGE, and NEUTRAL OVERVOLTAGE
2-5	Add	Added USER-PROGRAMMABLE ELEMENTS section
2-7	Add	Added specifications for TRANSDUCER I/O feature
3-14	Update	Updated DIGITAL I/O MODULE WIRING diagram to 827719CR
4-9	Remove	Removed DEFAULT LABELS FOR LED PANEL 3 sub-section
5-11	Update	Updated COMMUNICATIONS section to include updated settings for DNP 3.0 and IEC 60870-5-104 communications protocols
5-35	Update	Updated FLEXLOGIC™ OPERANDS table
5-47	Update	Updated FLEXLOGIC™ EQUATION EDITOR section
5-49	Add	Added FLEXELEMENTS™ settings section
5-63	Update	Updated NEUTRAL TOC SCHEME LOGIC diagram to 827034A3
5-69	Update	Updated VOLTAGE ELEMENTS menu to reflect Auxiliary UV/OV and Neutral OV elements
5-72	Add	Added AUXILIARY UV1 sub-section
5-72	Add	Added AUXILIARY OV1 sub-section
5-72	Add	Added NEUTRAL OVERVOLTAGE sub-section
5-98	Add	Added TRANSDUCER I/O settings section
6-15	Add	Added FLEXELEMENTS™ actual values section
6-15	Add	Added TRANSDUCER I/O actual values section
7-5	Update	Updated MAJOR and MINOR SELF-TEST ERROR MESSAGES tables
8-	Update	Chapter 10: COMMISSIONING updated to reflect settings changes for revision 2.8X firmware
B-11	Update	MODBUS MEMORY MAP updated for version 2.8X firmware
E-1	Update	Updated DNP 3.0 DEVICE PROFILE DOCUMENT table
E-4	Update	Updated DNP 3.0 IMPLEMENTATION table
E-9	Update	Updated BINARY INPUT PONTS table

F.2.1 LIST OF FIGURES

Figure 1–1: REAR NAME-PLATE (EXAMPLE) 1-1
Figure 1–2: UR CONCEPT BLOCK DIAGRAM 1-3
Figure 1–3: UR SCAN OPERATION 1-4
Figure 1–4: RELAY COMMUNICATIONS OPTIONS 1-8
Figure 2–1: SINGLE LINE DIAGRAM 2-1
Figure 3–1: F35 VERTICAL MOUNTING AND DIMENSIONS 3-1
Figure 3–2: F35 VERTICAL SIDE MOUNTING INSTALLATION 3-2
Figure 3–3: F35 VERTICAL SIDE MOUNTING REAR DIMENSIONS 3-3
Figure 3–4: F35 HORIZONTAL MOUNTING AND DIMENSIONS 3-3
Figure 3–5: UR MODULE WITHDRAWAL/INSERTION 3-4
Figure 3–6: REAR TERMINAL VIEW 3-5
Figure 3–7: EXAMPLE OF MODULES IN F & H SLOTS 3-5
Figure 3–8: TYPICAL WIRING DIAGRAM 3-6
Figure 3–9: CONTROL POWER CONNECTION 3-8
Figure 3–10: ZERO-SEQUENCE CORE BALANCE CT INSTALLATION 3-9
Figure 3–11: CT/VT MODULE WIRING 3-9
Figure 3–12: CT MODULE WIRING 3-9
Figure 3–13: FORM-A CONTACT FUNCTIONS 3-10
Figure 3–14: DIGITAL I/O MODULE WIRING (SHEET 1 OF 2) 3-13
Figure 3–15: DIGITAL I/O MODULE WIRING (SHEET 2 OF 2) 3-14
Figure 3–16: DRY AND WET CONTACT INPUT CONNECTIONS 3-15
Figure 3–17: TRANSDUCER I/O MODULE WIRING 3-16
Figure 3–18: RS232 FACEPLATE PORT CONNECTION 3-17
Figure 3–19: CPU MODULE COMMUNICATIONS WIRING 3-17
Figure 3–20: RS485 SERIAL CONNECTION 3-18
Figure 3–21: IRIG-B CONNECTION 3-19
Figure 4–1: URPC SOFTWARE MAIN WINDOW 4-3
Figure 4–2: UR HORIZONTAL FACEPLATE PANELS 4-4
Figure 4–3: UR VERTICAL FACEPLATE PANELS 4-4
Figure 4–4: LED PANEL 1 4-5
Figure 4–5: LED PANELS 2 AND 3 (INDEX TEMPLATE) 4-6
Figure 4–6: LED PANEL 2 (DEFAULT LABEL) 4-6
Figure 4–7: LED PANEL CUSTOMIZATION TEMPLATES (EXAMPLE) 4-8
Figure 4–8: KEYPAD 4-8
Figure 5–1: BREAKER-AND-A-HALF SCHEME 5-5
Figure 5–2: THERMAL DEMAND CHARACTERISTIC 5-19
Figure 5–3: EXAMPLE USE OF SOURCES 5-27
Figure 5–4: UR ARCHITECTURE OVERVIEW 5-29
Figure 5–5: EXAMPLE LOGIC SCHEME 5-35
Figure 5–6: LOGIC EXAMPLE WITH VIRTUAL OUTPUTS 5-36
Figure 5–7: LOGIC FOR VIRTUAL OUTPUT 3 5-36
Figure 5–8: LOGIC FOR VIRTUAL OUTPUT 4 5-36
Figure 5–9: FLEXLOGIC™ WORKSHEET 5-37
Figure 5–10: FLEXLOGIC™ EQUATION & LOGIC FOR VIRTUAL OUTPUT 3 5-37
Figure 5–11: FLEXLOGIC™ EQUATION & LOGIC FOR VIRTUAL OUTPUT 4 5-39
Figure 5–12: FLEXELEMENT™ SCHEME LOGIC 5-42
Figure 5–13: FLEXELEMENT™ DIRECTION, PICKUP, AND HYSTERESIS 5-43
Figure 5–14: FLEXELEMENT™ INPUT MODE SETTING 5-43
Figure 5–15: VOLTAGE RESTRAINT CHARACTERISTIC FOR PHASE TOC 5-54
Figure 5–16: PHASE TOC1 SCHEME LOGIC 5-54
Figure 5–17: PHASE IOC1 SCHEME LOGIC 5-55
Figure 5–18: NEUTRAL TOC1 SCHEME LOGIC 5-56
Figure 5–19: NEUTRAL IOC1 SCHEME LOGIC 5-57
Figure 5–20: GROUND TOC1 SCHEME LOGIC 5-58
Figure 5–21: GROUND IOC1 SCHEME LOGIC 5-59
Figure 5–22: INVERSE TIME UNDERVOLTAGE CURVES 5-60
Figure 5–23: PHASE UV1 SCHEME LOGIC 5-61
Figure 5–24: NEUTRAL OVERVOLTAGE SCHEME LOGIC 5-62
Figure 5–25: AUXILIARY UNDERVOLTAGE SCHEME LOGIC 5-63
Figure 5–26: AUXILIARY OVERVOLTAGE SCHEME LOGIC 5-64
Figure 5–27: EXAMPLE FLEXLOGIC™ CONTROL OF A SETTINGS GROUP 5-65
Figure 5–28: UNDERFREQUENCY SCHEME LOGIC 5-66

Figure 5–29: AUTORECLOSURE SCHEME LOGIC (Sheet 1 of 2) 5-71
Figure 5–30: AUTORECLOSURE SCHEME LOGIC (Sheet 2 of 2) 5-72
Figure 5–31: SINGLE SHOT AUTORECLOSING SEQUENCE - PERMANENT FAULT 5-73
Figure 5–32: DIGITAL ELEMENT SCHEME LOGIC 5-74
Figure 5–33: TRIP CIRCUIT EXAMPLE 1 5-75
Figure 5–34: TRIP CIRCUIT EXAMPLE 2 5-76
Figure 5–35: INPUT CONTACT DEBOUNCING MECHANISM AND TIME-STAMPING SAMPLE TIMING 5-78
Figure 5–36: VIRTUAL INPUTS SCHEME LOGIC 5-79
Figure 6–1: FLOW DIRECTION OF SIGNED VALUES FOR WATTS AND VARS 6-6
Figure 6–2: UR PHASE ANGLE MEASUREMENT CONVENTION 6-7
Figure 6–3: ILLUSTRATION OF THE UR CONVENTION FOR SYMMETRICAL COMPONENTS 6-8

F.2.2 LIST OF TABLES

Table: 2–1 ANSI DEVICE NUMBERS AND FUNCTIONS 2-2
Table: 2–2 OTHER DEVICE FUNCTIONS 2-2
Table: 2–3 ORDER CODES 2-3
Table: 2–4 ORDER CODES FOR REPLACEMENT MODULES 2-4
Table: 3–1 DIELECTRIC STRENGTH OF UR MODULE HARDWARE 3-7
Table: 3–2 CONTROL POWER VOLTAGE RANGE 3-7
Table: 3–3 DIGITAL I/O MODULE ASSIGNMENTS 3-11
Table: 3–4 CPU COMMUNICATION PORT OPTIONS 3-17
Table: 5–1 OSCILLOGRAPHY CYCLES/RECORD EXAMPLE 5-17
Table: 5–4 RECOMMENDED SETTINGS FOR LED PANEL 2 LABELS 5-20
Table: 5–9 FLEXCURVE™ TABLE 5-28
Table: 5–10 UR FLEXLOGIC™ OPERAND TYPES 5-30
Table: 5–11 F35 FLEXLOGIC™ OPERANDS 5-31
Table: 5–12 FLEXLOGIC™ GATE CHARACTERISTICS 5-33
Table: 5–13 FLEXLOGIC™ OPERATORS 5-34
Table: 5–14 FLEXELEMENT™ BASE UNITS 5-44
Table: 5–15 OVERCURRENT CURVE TYPES 5-48
Table: 5–16 IEEE INVERSE TIME CURVE CONSTANTS 5-49
Table: 5–17 IEEE CURVE TRIP TIMES (IN SECONDS) 5-49
Table: 5–18 IEC (BS) INVERSE TIME CURVE CONSTANTS 5-50
Table: 5–19 IEC CURVE TRIP TIMES (IN SECONDS) 5-50
Table: 5–20 GE TYPE IAC INVERSE TIME CURVE CONSTANTS 5-51
Table: 5–21 IAC CURVE TRIP TIMES 5-51
Table: 5–22 I^2t CURVE TRIP TIMES 5-52
Table: 5–23 VALUES OF RESISTOR ‘R’ 5-76
Table: 5–24 UCA DNA2 ASSIGNMENTS 5-83
Table: 6–1 CALCULATING VOLTAGE SYMMETRICAL COMPONENTS EXAMPLE 6-8
Table: 6–2 FLEXELEMENT™ BASE UNITS 6-13
Table: 7–1 TARGET MESSAGE PRIORITY STATUS 7-3
Table: 7–2 MAJOR SELF-TEST ERROR MESSAGES 7-4
Table: 7–3 MINOR SELF-TEST ERROR MESSAGES 7-4
Table: 8–1 PRODUCT SETUP 8-1
Table: 8–2 SYSTEM SETUP 8-8
Table: 8–3 FLEXCURVE™ TABLE 8-10
Table: 8–4 FLEXCURVE™ TABLE 8-11
Table: 8–5 GROUPED ELEMENTS 8-12
Table: 8–6 CONTROL ELEMENTS 8-19
Table: 8–7 CONTACT INPUTS 8-23
Table: 8–8 VIRTUAL INPUTS 8-24
Table: 8–9 UCA SBO TIMER 8-24
Table: 8–10 CONTACT OUTPUTS 8-25
Table: 8–11 VIRTUAL OUTPUTS 8-26
Table: 8–12 REMOTE DEVICES 8-27
Table: 8–13 REMOTE INPUTS 8-28
Table: 8–14 REMOTE OUTPUTS 8-29
Table: 8–15 DCMA INPUTS 8-30
Table: 8–16 RTD INPUTS 8-31
Table: 8–17 FORCE CONTACT INPUTS 8-32
Table: 8–18 FORCE CONTACT OUTPUTS 8-32
Table: A–1 FLEXANALOG PARAMETERS A-1

F

Table: B–1 MODBUS PACKET FORMAT B-1
Table: B–2 CRC-16 ALGORITHM B-3
Table: B–3 MASTER AND SLAVE DEVICE PACKET TRANSMISSION EXAMPLE B-4
Table: B–4 MASTER AND SLAVE DEVICE PACKET TRANSMISSION EXAMPLE B-5
Table: B–5 SUMMARY OF OPERATION CODES (FUNCTION CODE 05H) B-5
Table: B–6 MASTER AND SLAVE DEVICE PACKET TRANSMISSION EXAMPLE B-5
Table: B–7 MASTER AND SLAVE DEVICE PACKET TRANSMISSION EXAMPLE B-6
Table: B–8 MASTER AND SLAVE DEVICE PACKET TRANSMISSION EXAMPLE B-6
Table: B–9 MODBUS MEMORY MAP B-9
Table: C–1 DEVICE IDENTITY – DI C-3
Table: C–2 GENERIC CONTROL – GCTL C-3
Table: C–3 GENERIC INDICATOR – GIND C-4
Table: C–4 GLOBAL DATA – GLOBE C-4
Table: C–5 MEASUREMENT UNIT (POLYPHASE) – MMXU C-4
Table: C–6 PROTECTIVE ELEMENTS C-5
Table: C–7 CT RATIO INFORMATION – ctRATO C-5
Table: C–8 VT RATIO INFORMATION – vtRATO C-5
Table: C–9 RECLOSING RELAY – RREC C-6
Table: D–1 IEC 60870-5-104 POINTS D-10
Table: E–1 DNP V3.00 DEVICE PROFILE E-1
Table: E–2 IMPLEMENTATION TABLE E-4
Table: E–3 BINARY INPUTS E-8
Table: E–4 BINARY/CONTROL OUTPUT POINT LIST E-13
Table: E–5 BINARY and FROZEN COUNTERS E-14
Table: E–6 ANALOG INPUT POINTS E-16
Table: F–1 CHANGES TO F35 MANUAL REVISION B5 ..... F-1
Table: F–2 CHANGES TO F35 MANUAL REVISION B4 ..... F-2

F.3.1 STANDARD ABBREVIATIONS

A..... ampere
AC ..... alternating current
A/D ..... analog to digital
AE ..... accidental energization
AE ..... application entity
AMP ..... ampere
ANSI..... American National Standards Institute
AR ..... automatic reclosure
AUTO ..... automatic
AUX..... auxiliary
AVG..... average

BER..... bit error rate
BF..... breaker fail
BFI..... breaker failure initiate
BKR..... breaker
BLK ..... block
BLKG..... blocking
BPNT..... breakpoint of a characteristic

CAP..... capacitor
CC ..... coupling capacitor
CCVT ..... coupling capacitor voltage transformer
CFG..... configure / configurable
.CFG..... file name extension for oscillography files
CHK..... check
CHNL ..... channel
CLS ..... close
CLSD..... closed
CMND ..... command
CMPRSN..... comparison
CO..... contact output
COM..... communication
COMM..... communications
COMP ..... compensated
CONN..... connection
CO-ORD..... coordination
CPU..... central processing unit
CRT, CRNT .... current
CT ..... current transformer
CVT ..... capacitive voltage transformer

D/A ..... digital to analog
DC (dc)..... direct current
DD ..... disturbance detector
DFLT ..... default
DGNST..... diagnostics
DI..... digital input
DIFF ..... differential
DIR ..... directional
DISCREP ..... discrepancy
DIST ..... distance
DMD ..... demand
DPO ..... dropout
DSP ..... digital signal processor
DTT ..... direct transfer trip
DUTT..... direct under-reaching transfer trip

EPRI..... Electric Power Research Institute
.EVT ..... file name extension for event recorder files
EXT ..... extension

F ..... field
FAIL..... failure
FD ..... fault detector
FDH..... fault detector high-set
FDL ..... fault detector low-set
FLA..... full load current
FO ..... fiber optic
FREQ ..... frequency
FSK ..... frequency-shift keying
FWD ..... forward

G ..... generator
GE..... General Electric
GND ..... ground
GNTR ..... generator

GOOSE..... general object oriented substation event

HARM ..... harmonic / harmonics
HGF ..... high-impedance ground fault (CT)
HIZ ..... high-impedance & arcing ground
HMI ..... human-machine interface
HYB ..... hybrid

I..... instantaneous
I_0..... zero sequence current
I_1..... positive sequence current
I_2..... negative sequence current
IA ..... phase A current
IAB ..... phase A minus B current
IB ..... phase B current
IBC..... phase B minus C current
IC ..... phase C current
ICA..... phase C minus A current
ID ..... identification
IEEE..... Institute of Electrical & Electronic Engineers
IG ..... ground (not residual) current
Igd..... differential ground current
IN ..... CT residual current (3Io) or input
INC SEQ ..... incomplete sequence
INIT ..... initiate
INST..... instantaneous
INV..... inverse
I/O ..... input/output
IOC ..... instantaneous overcurrent
IOV..... instantaneous overvoltage
IRIG ..... inter-range instrumentation group
IUV..... instantaneous undervoltage

K0 ..... zero sequence current compensation
kA..... kiloAmpere
kV..... kiloVolt

LED..... light emitting diode
LEO..... line end open
LOOP..... loopback
LPU..... line pickup
LRA..... locked-rotor current
LTC ..... load tap-changer

M..... machine
mA ..... milliAmpere
MAN..... manual / manually
MMI..... man machine interface
MMS ..... Manufacturing Message Specification
MSG..... message
MTA..... maximum torque angle
MTR ..... motor
MVA ..... MegaVolt-Ampere (total 3-phase)
MVA_A..... MegaVolt-Ampere (phase A)
MVA_B..... MegaVolt-Ampere (phase B)
MVA_C..... MegaVolt-Ampere (phase C)
MVAR..... MegaVar (total 3-phase)
MVAR_A ..... MegaVar (phase A)
MVAR_B ..... MegaVar (phase B)
MVAR_C ..... MegaVar (phase C)
MVARH ..... MegaVar-Hour
MW ..... MegaWatt (total 3-phase)
MW_A..... MegaWatt (phase A)
MW_B..... MegaWatt (phase B)
MW_C..... MegaWatt (phase C)
MWH..... MegaWatt-Hour

N ..... neutral
N/A, n/a..... not applicable
NEG ..... negative
NMPLT..... nameplate
NOM ..... nominal
NTR ..... neutral

O ..... over
OC, O/C ..... overcurrent
O/P, Op ..... output
OP..... operate

OPER ..... operate
OPERATG ..... operating
O/S ..... operating system
OSB..... out-of-step blocking
OUT..... output
OV ..... overvoltage
OVERFREQ ... overfrequency
OVLD ..... overload

P ..... phase
PC ..... phase comparison, personal computer
PCNT ..... percent
PF..... power factor (total 3-phase)
PF_A ..... power factor (phase A)
PF_B ..... power factor (phase B)
PF_C ..... power factor (phase C)
PHS..... phase
PKP ..... pickup
PLC ..... power line carrier
POS..... positive
POTT..... permissive over-reaching transfer trip
PRESS ..... pressure
PROT ..... protection
PSEL ..... presentation selector
pu ..... per unit
PUIB..... pickup current block
PUIT ..... pickup current trip
PUTT..... permissive under-reaching transfer trip
PWM ..... pulse width modulated
PWR..... power

R..... rate, reverse
REM ..... remote
REV..... reverse
RI..... reclose initiate
RIP ..... reclose in progress
ROD ..... remote open detector
RST ..... reset
RSTR ..... restrained
RTD ..... resistance temperature detector
RTU ..... remote terminal unit
RX (Rx) ..... receive, receiver

s ..... second
S..... sensitive
SAT ..... CT saturation
SBO..... select before operate
SEL ..... select / selector / selection
SENS ..... sensitive
SEQ..... sequence
SIR ..... source impedance ratio
SRC..... source
SSB ..... single side band
SSEL ..... session selector
STATS ..... statistics
SUPN ..... supervision
SUPV .....supervise / supervision
SV .....supervision
SYNCHCHK....synchrocheck

T.....time, transformer
TC .....thermal capacity
TD MULT .....time dial multiplier
TEMP .....temperature
THD .....total harmonic distortion
TOC .....time overcurrent
TOV .....time overvoltage
TRANS.....transient
TRANSF .....transfer
TSEL.....transport selector
TUC .....time undercurrent
TUV.....time undervoltage
TX (Tx).....transmit, transmitter

U .....under
UC.....undercurrent
UCA .....Utility Communications Architecture
UNBAL.....unbalance
UR.....universal relay
.URS .....file name extension for settings files
UV.....undervoltage

V/Hz .....Volts per Hertz
V_0 .....zero sequence voltage
V_1 .....positive sequence voltage
V_2 .....negative sequence voltage
VA .....phase A voltage
VAB.....phase A to B voltage
VAG .....phase A to ground voltage
VARH .....var-hour voltage
VB .....phase B voltage
VBA.....phase B to A voltage
VBG .....phase B to ground voltage
VC.....phase C voltage
VCA .....phase C to A voltage
VCG .....phase C to ground voltage
VF .....variable frequency
VIBR .....vibration
VT .....voltage transformer
VTFF.....voltage transformer fuse failure
VTLOS .....voltage transformer loss of signal

WDG .....winding
WH.....Watt-hour
w/ opt .....with option
WRT.....with respect to

X .....reactance
XDUCER.....transducer
XFMR.....transformer

Z.....impedance

F

GE POWER MANAGEMENT RELAY WARRANTY

General Electric Power Management Inc. (GE Power Management) warrants each relay it manufactures to be free from defects in material and workmanship under normal use and service for a period of 24 months from date of shipment from factory.

In the event of a failure covered by warranty, GE Power Management will undertake to repair or replace the relay providing the warrantor determined that it is defective and it is returned with all transportation charges prepaid to an authorized service centre or the factory. Repairs or replacement under warranty will be made without charge.

Warranty shall not apply to any relay which has been subject to misuse, negligence, accident, incorrect installation or use not in accordance with instructions nor any unit that has been altered outside a GE Power Management authorized factory outlet.

GE Power Management is not liable for special, indirect or consequential damages or for loss of profit or for expenses sustained as a result of a relay malfunction, incorrect application or adjustment.

For complete text of Warranty (including limitations and disclaimers), refer to GE Power Management Standard Conditions of Sale.

Numerics

10BASE-F
- communications options ... 3-17
- description ... 3-19
- redundant option ... 3-17
- settings ... 5-9
- specifications ... 2-8

A

ABBREVIATIONS ... F-6
AC CURRENT INPUTS ... 2-7, 3-8, 5-24
AC VOLTAGE INPUTS ... 2-7, 3-9
ACTIVATING THE RELAY ... 1-10, 4-12
ACTIVE SETTING GROUP ... 5-45
ACTUAL VALUES
- metering ... 6-6
- product information ... 6-15
- status ... 6-3

ALARM LEDs ... 5-20
ALTITUDE ... 2-8
ANSI DEVICE NUMBERS ... 2-2
APPARENT POWER ... 2-7, 6-11
APPLICATION EXAMPLES
- breaker trip circuit integrity ... 5-76
- contact inputs ... 5-78

APPROVALS ... 2-9
AR
- see entry for AUTORECLOSE

ARCHITECTURE ... 5-29
AUTORECLOSE
- actual values ... 6-4
- commissioning ... 8-19
- logic ... 5-71, 5-72
- Modbus registers ... B-13, B-22
- settings ... 5-67, 5-69, 5-70
- single shot sequence ... 5-73
- specifications ... 2-5

AUXILIARY OVERVOLTAGE
- commissioning ... 8-18
- logic ... 5-64
- Modbus registers ... B-36
- settings ... 5-64
- specifications ... 2-5

AUXILIARY UNDERVOLTAGE
- commissioning ... 8-18
- logic ... 5-63
- Modbus registers ... B-36
- settings ... 5-63
- specifications ... 2-5

AUXILIARY VOLTAGE CHANNEL ... 3-9
AUXILIARY VOLTAGE METERING ... 6-10

B

BANKS ... 5-6, 5-24, 5-25
BATTERY FAIL ... 7-4
BATTERY TAB ... 1-10
BINARY INPUT POINTS ... E-8
BINARY OUTPUT POINTS ... E-13
BLOCK DIAGRAM ... 1-3
BLOCK SETTING ... 5-4
BREAKER-AND-A-HALF SCHEME ... 5-5
BRIGHTNESS ... 5-8

C

CE APPROVALS ... 2-9
CHANGES TO F35 MANUAL ... F-1
CHANNELS
- banks ... 5-24, 5-25

CIRCUIT MONITORING APPLICATIONS ... 5-75
CLEANING ... 2-9
CLEAR RECORDS ... 7-2
CLOCK
- commissioning ... 8-1
- Modbus registers ... B-17
- setting date and time ... 7-2
- settings ... 5-15

COMMANDS MENU ... 7-1
COMMISSIONING ... 8-1
COMMUNICATIONS
- 10BASE-F ... 3-17, 3-19, 5-9
- commissioning ... 8-1
- connecting to the UR ... 1-6, 1-7
- CRC-16 error checking ... B-3
- DNP ... 5-10
- dnp ... 5-15, E-1
- half duplex ... B-1
- HTTP ... 5-13
- IEC 60870-5-104 protocol ... 5-14
- Modbus ... 5-10, 5-15, B-1, B-4
- Modbus registers ... B-16
- network ... 5-9
- overview ... 1-8
- RS232 ... 3-17
- RS485 ... 3-17, 3-18, 5-8
- settings ... 5-8, 5-9, 5-10, 5-12, 5-14, 5-15
- specifications ... 2-8
- TFTP ... 5-13
- UCA/MMS ... 5-12, 5-80, 5-81, 5-82, 5-83, C-1
- web server ... 5-13

COMTRADE ... B-7, B-8
CONDUCTED RFI ... 2-9
CONTACT INFORMATION ... 1-1
CONTACT INPUTS
- actual values ... 6-3
- commissioning ... 8-23
- dry connections ... 3-15
- force contact inputs ... 8-32
- Modbus registers ... B-10, B-13, B-27, B-28
- module assignments ... 3-11
- settings ... 5-77
- specifications ... 2-7
- thresholds ... 5-77
- wet connections ... 3-15
- wiring ... 3-13

CONTACT OUTPUTS
- actual values ... 6-4
- commissioning ... 8-25
- force contact outputs ... 8-32
- Modbus registers ... B-10, B-13, B-30
- module assignments ... 3-11
- settings ... 5-80
- wiring ... 3-13

CONTROL ELEMENTS ... 5-65
CONTROL POWER
- connection diagram ... 3-7
- description ... 3-8

specifications 2-8
CRC-16 ALGORITHM B-3
CSA APPROVAL 2-9
CT BANKS 8-8
Modbus registers B-18
settings 5-24
CT INPUTS 3-9, 5-6, 5-24
CT WIRING 3-9
CURRENT BANK 5-24
CURRENT DEMAND 5-18
CURRENT ELEMENTS 5-45
CURRENT METERING
actual values 6-9
Modbus registers B-11
specifications 2-7
CURVES
definite time 5-52, 5-60
FlexCurves™ 5-28, 5-52
I2T 5-52
IAC 5-51
IEC 5-50
IEEE 5-49
inverse time undervoltage 5-60
types 5-48

D

DATA FORMATS, MODBUS B-37
DATA LOGGER
clearing 7-2
commissioning 8-2
Modbus B-7, B-8
Modbus registers B-10, B-17
settings 5-18
specifications 2-6
DATE 7-2
DCMA INPUTS 6-13
commissioning 8-30
Modbus registers B-14, B-23
settings 5-85
specifications 2-7
DEFINITE TIME CURVE 5-52, 5-60
DEMAND METERING
actual values 6-11
Modbus registers B-13, B-19
settings 5-18
specifications 2-7
DEMAND RECORDS
clearing 7-2
DESIGN 1-3
DEVICE ID 5-82
DEVICE PROFILE DOCUMENT E-1
DIELECTRIC STRENGTH 2-9, 3-7
DIGITAL ELEMENTS
application example 5-75
commissioning 8-20
logic 5-74
Modbus registers B-26
settings 5-74
DIGITAL INPUTS
see entry for CONTACT INPUTS
DIGITAL OUTPUTS
see entry for CONTACT OUTPUTS
DIMENSIONS 3-1
DISPLAY 1-8, 4-8, 5-8
DISPLAY PROPERTIES
commissioning 8-1
DNA-1 BIT PAIR 5-83
DNP COMMUNICATIONS
binary counters E-14
binary input points E-8
binary output points E-13
commissioning 8-1
control relay output blocks E-13
device profile document E-1
frozen counters E-14
implementation table E-4
Modbus registers B-16
settings 5-10
user map 5-12
DUPLEX, HALF B-1

E

ELECTROSTATIC DISCHARGE 2-9
ELEMENTS 5-3
ENERGY METERING
actual values 6-11
Modbus registers B-12, B-13
specifications 2-7
ENERGY METERING, CLEARING 7-2
EQUATIONS
definite time curve 5-52, 5-60
FlexCurve™ 5-52
I^2t curves 5-52
IAC curves 5-51
IEC curves 5-50
IEEE curves 5-49
ETHERNET
actual values 6-5
configuration 1-6
Modbus registers B-10
settings 5-9
specifications 2-8
EVENT CAUSE INDICATORS 4-5
EVENT RECORDER
actual values 6-14
clearing 7-2
Modbus B-8
Modbus registers B-14
specifications 2-6
with URPC 4-2
EVENTS SETTING 5-4
EXCEPTION RESPONSES B-6

F

F485 1-8
FACEPLATE 3-1
FACEPLATE PANELS 4-4, 4-7
FAST TRANSIENT TESTING 2-9
FAX NUMBERS 1-1
FEATURES 2-1
FIRMWARE REVISION 6-15
FIRMWARE UPGRADES 4-2
FLASH MESSAGES 5-8
FLEX STATE PARAMETERS
actual values 6-5
commissioning 8-4
Modbus registers B-10, B-13, B-25
settings 5-21

specifications 2-6
FLEXANALOG PARAMETER LIST A-1
FLEXANALOG PARAMETERS A-1
FLEXCURVES™
commissioning 8-10, 8-11
equation 5-52
Modbus registers B-19
settings 5-28
specifications 2-6
table 5-28
FLEXELEMENTS™
actual values 6-13
direction 5-43
hysteresis 5-43
Modbus registers B-25, B-26
pickup 5-43
scheme logic 5-42
settings 5-41, 5-42, 5-44
specifications 2-6
FLEXLOGIC™
editing with URPC 4-1
equation editor 5-40
evaluation 5-35
example 5-29, 5-35
example equation 5-65
gate characteristics 5-33
Modbus registers B-19
operands 5-30, 5-31
operators 5-34
rules 5-34
specifications 2-6
timers 5-40
worksheet 5-36
FLEXLOGIC™ EQUATION EDITOR 5-40
FLEXLOGIC™ TIMERS 5-40
FORCE CONTACT INPUTS 5-87, 8-32
FORCE CONTACT OUTPUTS 5-87, 8-32
FORCE TRIGGER 6-14
FORM-A RELAY
high impedance circuits 3-11
outputs 3-10, 3-11, 3-15
specifications 2-8
FORM-C RELAY
outputs 3-10, 3-15
FREQUENCY
actual values 6-12
settings 5-26
FREQUENCY METERING
Modbus registers B-13, B-25
specifications 2-7
values 6-12
FREQUENCY TRACKING 5-26
FREQUENCY, NOMINAL 5-25
FUNCTION SETTING 5-3
FUSE 2-8

G

GE TYPE IAC CURVES 5-51
GOMSFE C-1
GOOSE 5-13, 5-81, 5-82, 5-83, 5-84, 6-5
GROUND CURRENT METERING 6-9
GROUND INSTANTANEOUS OVERCURRENT
see entry for GROUND IOC
GROUND IOC
commissioning 8-16
logic 5-59
Modbus registers B-22
settings 5-59
specifications 2-5
GROUND TIME OVERCURRENT
see entry for GROUND TOC
GROUND TOC
commissioning 8-16
logic 5-58
Modbus registers B-21
settings 5-58
specifications 2-5
GROUPED ELEMENTS 5-45

H

HALF-DUPLEX B-1
HARMONIC CONTENT 6-9
HTTP PROTOCOL 5-13, 8-1
HUMIDITY 2-8

I

I2T CURVES 5-52
IAC CURVES 5-51
IEC 60870-5-104 PROTOCOL
commissioning 8-1
interoperability document D-1
Modbus registers B-17
points list D-10
settings 5-14
IEC CURVES 5-50
IED 1-2
IEEE CURVES 5-49
IMPORTANT CONCEPTS 1-4
IN SERVICE INDICATOR 1-10, 7-3
INPUTS
AC current 2-7, 5-24
AC voltage 2-7, 5-25
contact inputs 2-7, 3-13, 5-77, 5-87
DCMA inputs 2-7
dcmA inputs 3-16, 5-85
IRIG-B 2-7, 3-19
remote inputs 5-81, 5-82
RTD inputs 2-7, 3-16, 5-86
virtual 5-79
INSPECTION CHECKLIST 1-1
INSTALLATION
commissioning 8-7
communications 3-17
contact inputs/outputs 3-11, 3-13, 3-14
CT inputs 3-9
Modbus registers B-18
RS485 3-18
settings 5-23
VT inputs 3-8
INSTANTANEOUS OVERCURRENT
see PHASE, GROUND, and NEUTRAL IOC entries
INSULATION RESISTANCE 2-9
INTELLIGENT ELECTRONIC DEVICE 1-2
INTRODUCTION 1-2
INVERSE TIME UNDERVOLTAGE 5-60
IOC 2-5
see PHASE, GROUND, and NEUTRAL IOC entries
IP ADDRESS 5-9

IRIG-B
connection 3-19
settings 5-15
specifications 2-7
ISO-9000 REGISTRATION 2-9

K

KEYPAD 1-9, 4-8

L

LAMPTEST 7-2
LED INDICATORS 4-5, 4-6, 4-7, 5-20
LOGIC GATES 5-34
LOST PASSWORD 5-7

M

MAINTENANCE COMMANDS 7-2
MANUFACTURING DATE 6-15
MEMORY MAP DATA FORMATS B-37
MENU HEIRARCHY 1-9, 4-9
MENU NAVIGATION 1-9, 4-9, 4-10
METERING
conventions 6-6, 6-7
current 2-7
demand 2-7
frequency 2-7
power 2-7
voltage 2-7
METERING CONVENTIONS 6-7
MIC C-3
MMS
see entry for UCA/MMS
MODBUS
data logger B-7, B-8
event recorder B-8
exception responses B-6
execute operation B-5
flex state parameters 5-21
function code 03/04h B-4
function code 05h B-5
function code 06h B-5
function code 10h B-6
introduction B-1
memory map data formats B-37
obtaining files B-7
oscillography B-7
passwords B-8
read/write settings/actual values B-4
settings 5-10, 5-15
store multiple settings B-6
store single setting B-5
supported function codes B-4
user map 5-15
MODEL INFORMATION 6-15
MODIFICATION FILE NUMBER 6-15
MODULES
communications 3-17
contact inputs/outputs 3-11, 3-13, 3-14
CT 3-9
CT/VT 3-8, 5-6
insertion 3-4
order codes 2-4
ordering 2-4
power supply 3-7
transducer I/O 3-16
VT 3-9
withdrawal 3-4
MOUNTING 3-1

N

NAMEPLATE 1-1
NEUTRAL INSTANTANEOUS OVERCURRENT
see entry for NEUTRAL IOC
NEUTRAL IOC B-21
commissioning 8-15
logic 5-57
settings 5-57
specifications 2-5
NEUTRAL OVERVOLTAGE
commissioning 8-18
logic 5-62
Modbus registers B-36
settings 5-62
specifications 2-5
NEUTRAL TIME OVERCURRENT
see entry for NEUTRAL TOC
NEUTRAL TOC
commissioning 8-14
logic 5-56
Modbus registers B-21
settings 5-56
specifications 2-5

O

ONE SHOTS 5-34
OPERATING TEMPERATURE 2-8
OPERATING TIMES 2-5
ORDER CODES 2-3, 6-15, 7-2
ORDER CODES, UPDATING 7-2
ORDERING 2-3, 2-4
OSCILLATORY TRANSIENT TESTING 2-9
OSCILLOGRAPHY
actual values 6-14
clearing 7-2
commissioning 8-1
Modbus B-7
Modbus registers B-14, B-17
settings 5-16
specifications 2-6
with URPC 4-2
OUTPUTS
contact outputs 3-11, 3-13, 5-80
control power 2-8
Form-A relay 2-8, 3-10, 3-11, 3-15
Form-C relay 3-10, 3-15
remote outputs 5-83, 5-84
virtual outputs 5-81
OVERCURRENT CURVE TYPES 5-48
OVERCURRENT CURVES
definite time 5-52
FlexCurves™ 5-52
I2T 5-52
IAC 5-51
IEC 5-50

IEEE 5-49
OVERVOLTAGE
auxiliary 2-5, 5-64
neutral 2-5, 5-62

P

PANEL CUTOUT 3-1
PASSWORD SECURITY 5-7, 8-1
PASSWORDS
changing 4-12
lost password 4-13, 5-7
Modbus B-8
Modbus registers B-15, B-16
overview 1-10
security 5-7
settings 5-7
PC SOFTWARE
see entry for URPC
PERMISSIVE FUNCTIONS 5-60
PER-UNIT QUANTITY 5-3
PHASE ANGLE METERING 6-7
PHASE CURRENT METERING 6-9
PHASE INSTANTANEOUS OVERCURRENT
see entry for PHASE IOC
PHASE IOC
commissioning 8-12
logic 5-55
Modbus registers B-20
specifications 2-5
PHASE ROTATION 5-26
PHASE TIME OVERCURRENT
see entry for PHASE TOC
PHASE TOC
commissioning 8-12
logic 5-54
Modbus registers B-20
settings 5-53
specifications 2-5
PHASE UNDERVOLTAGE
commissioning 8-18
logic 5-61
Modbus registers B-23
settings 5-61
specifications 2-5
PHONE NUMBERS 1-1
PICS C-2
POWER METERING
Modbus registers B-12
specifications 2-7
values 6-10
POWER SUPPLY
description 3-7
low range 2-8
specifications 2-8
POWER SYSTEM
commissioning 8-8
Modbus registers B-19
PRODUCT INFORMATION 6-15
PRODUCT SETUP 5-7, 8-1
PRODUCTION TESTS 2-9
PROTECTION ELEMENTS 5-3
PU QUANTITY 5-3

R

REACTIVE POWER 2-7, 6-10
REAL POWER 2-7, 6-10
REAL TIME CLOCK 5-15
REAR TERMINAL ASSIGNMENTS 3-5
REDUNDANT 10BASE-F 3-17
RELAY ACTIVATION 4-12
RELAY ARCHITECTURE 5-29
RELAY MAINTENANCE 7-2
RELAY NAME 5-23
RELAY NOT PROGRAMMED 1-10
REMOTE DEVICES
actual values 6-4
commissioning 8-27
device ID 5-82
Modbus registers B-10, B-14, B-32
settings 5-81
statistics 6-5
REMOTE INPUTS
actual values 6-3
commissioning 8-28
Modbus registers B-10, B-14, B-32
settings 5-82
REMOTE OUTPUTS
commissioning 8-29
DNA-1 bit pair 5-83
Modbus registers B-33, B-34
UserSt-1 bit pair 5-84
REPLACEMENT MODULES 2-4
RESETTING 5-84, 8-29
REVISION HISTORY F-1
RFI SUSCEPTIBILITY 2-9
RFI, CONDUCTED 2-9
RMS CURRENT 2-7
RMS VOLTAGE 2-7
ROLLING DEMAND 5-19
RS232
configuration 1-6
specifications 2-8
wiring 3-17
RS485
communications 3-17
description 3-18
specifications 2-8
RTD INPUTS
actual values 6-13
commissioning 8-31
Modbus registers B-14, B-24
settings 5-86
specifications 2-7

S

SALES OFFICE 1-1
SCAN OPERATION 1-4
SELF-TESTS
description 7-3
error messages 7-4
SERIAL NUMBER 6-15
SERIAL PORTS 5-8, B-16
SETTING GROUPS 5-45, 5-65, 8-19
Modbus registers B-26
SETTINGS, CHANGING 4-10
SIGNAL SOURCES

commissioning 8-8
description 5-4
metering 6-9
Modbus registers B-19
SIGNAL TYPES 1-3
SINGLE LINE DIAGRAM 2-1
SITE LIST, CREATING 4-1
SOFTWARE
see entry for URPC
SOFTWARE ARCHITECTURE 1-4
SOFTWARE, PC
see entry for URPC
SOURCE TRANSFER SCHEMES 5-60
SOURCES
description 5-4
example use of 5-27
metering 6-9
Modbus registers B-11
SPECIFICATIONS 2-5
ST TYPE CONNECTORS 3-19
STANDARD ABBREVIATIONS F-6
STATUS INDICATORS 4-5
SURGE IMMUNITY 2-9
SYMMETRICAL COMPONENTS METERING 6-7
SYSTEM FREQUENCY 5-25
SYSTEM SETUP 5-24, 8-8

T

TARGET MESSAGES 7-3
TARGET SETTING 5-4
TARGETS MENU 7-3
TCP PORT NUMBER 5-13
TEMPERATURE, OPERATING 2-8
TERMINALS 3-5
TEST MODE 5-87
TESTING
commissioning 8-32
force contact inputs 5-87
force contact outputs 5-87
lamp test 7-2
self-test error messages 7-3
test mode 5-87
TFTP PROTOCOL 5-13, 8-1
THERMAL DEMAND CHARACTERISTIC 5-19
TIME 7-2
TIME OVERCURRENT
see PHASE, NEUTRAL, and GROUND TOC entries
TIMERS 5-40
TOC
ground 5-58
neutral 5-56
phase 5-53
specifications 2-5
TRACKING FREQUENCY 6-12
TRANSDUCER I/O
actual values 6-13
commissioning 8-30, 8-31
Modbus registers B-14, B-23, B-24
settings 5-85, 5-86
specifications 2-7
wiring 3-16
TRIP LEDs 5-20
TROUBLE INDICATOR 1-10, 7-3
TYPE TESTS 2-9
TYPICAL WIRING DIAGRAM 3-6

U

UCA SBO TIMER 5-80, 8-24
UCA/MMS
commissioning 8-1
device ID 5-82
DNA2 assignments 5-83
MIC C-3
overview C-1
PICS C-2
remote device settings 5-81
remote inputs 5-82
reporting C-6
SBO timeout 5-80
settings 5-12
UserSt-1 bit pair 5-84
UL APPROVAL 2-9
UNDERFREQUENCY
commissioning 8-19
logic 5-66
Modbus registers B-25
settings 5-66
specifications 2-5
UNDERVOLTAGE
auxiliary 2-5
phase 2-5, 5-61
UNDERVOLTAGE CHARACTERISTICS 5-60
UNIT NOT PROGRAMMED 5-23
UNPACKING THE RELAY 1-1
UPDATING ORDER CODE 7-2
URPC
creating a site list 4-1
event recorder 4-2
firmware upgrades 4-2
installation 1-5
introduction 4-1
oscillography 4-2
overview 4-1
requirements 1-5
USER MAP B-10, B-19
USER-DEFINABLE DISPLAYS
commissioning 8-6
example 5-22
settings 5-22
specifications 2-6
USER-PROGRAMMABLE LEDs
commissioning 8-3
custom labeling 4-7
defaults 4-6
description 4-6
Modbus registers B-17
settings 5-20
specifications 2-6
USERST-1 BIT PAIR 5-84

V

VAR-HOURS 2-7, 6-11
VIBRATION TESTING 2-9
VIRTUAL INPUTS
actual values 6-3
commands 7-1
commissioning 8-24
logic 5-79
Modbus registers B-9, B-28

settings 5-79
VIRTUAL OUTPUTS
actual values 6-4
commissioning 8-26
Modbus registers B-29
settings 5-81
VOLTAGE BANKS 5-25, 8-8
VOLTAGE DEVIATIONS 2-9
VOLTAGE ELEMENTS 5-60
VOLTAGE METERING
Modbus registers B-11
specifications 2-7
values 6-9
VOLTAGE RESTRAINT CHARACTERISTIC 5-53
VT BANKS
Modbus registers B-18
VT INPUTS 3-9, 5-6, 5-25
VT WIRING 3-9

W

WARRANTY F-9
WATT-HOURS 2-7, 6-11
WEB SERVER PROTOCOL 5-13, 8-1
WEBSITE 1-1
WIRING DIAGRAM 3-6

Z

ZERO SEQUENCE CORE BALANCE 3-9