Instruction Book

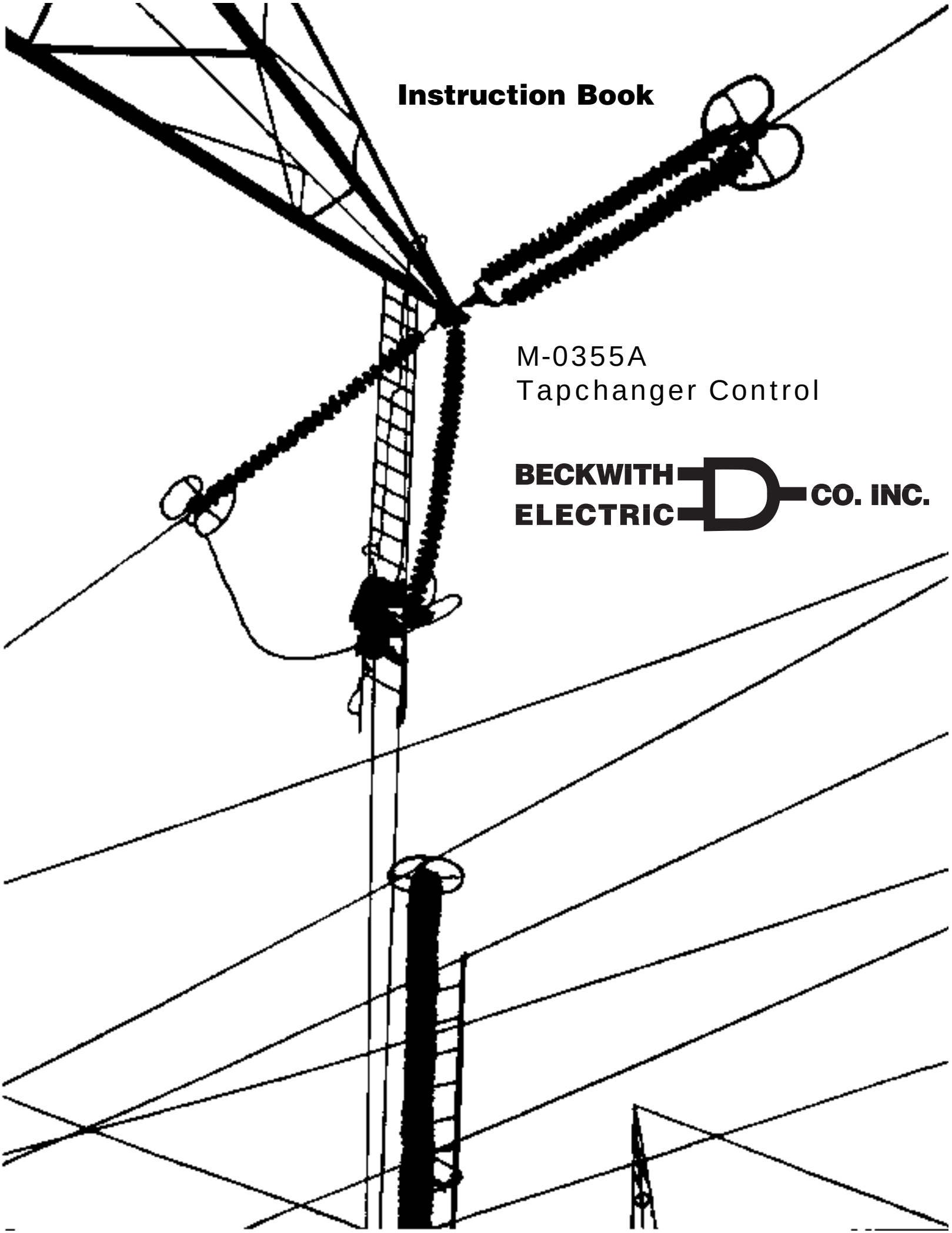

M-0355A
Tapchanger Control

BECKWITH ELECTRIC CO. INC.

BECKWITH ELECTRIC CO. INC.

Tapchanger Control M-0355A

Replaces Cooper (formerly McGraw-Edison) CL-2 and CL-2A Regulator Controls and Voltage Control Relays for CL-4A, CL-4B and CL-4C

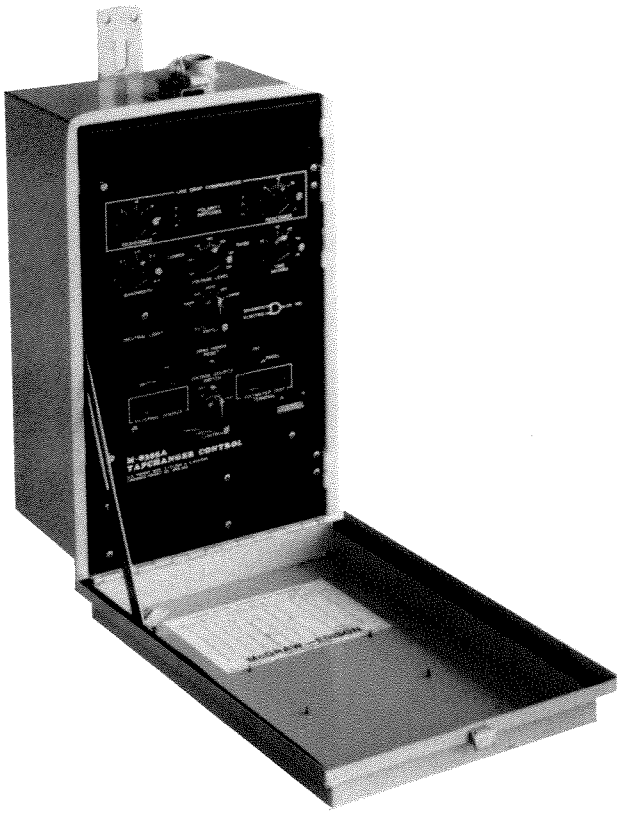

- Modern solid-state circuitry directly replaces the old regulator control circuitry
- Exceeds ANSI 1% accuracy requirement from –40° to +80° C with up to 10% total harmonic distortion on the input
- Uses true rms voltage detection measurement technique
- On-site operator test control
- Optional functions include multi-step voltage reduction, paralleling input, reverse power operation input, 240 V ac motor/control power and 50 Hz operating frequency
- Fully transient-protected

The M-0355 is a solid-state voltage control relay that provides convenient direct replacement for Cooper Regulator Controls that are mechanically compatible. The M-0355 consists of a front panel with hinge leaves on the right side and mounts into the existing control cabinet. External connections are made via a wiring harness with a fanning strip that connects to the terminal block in the existing control cabinet.

FEATURES

- Calibrated **±R** and **±X LINE DROP COMPENSATOR** uses a patented solid-state phase shifter to produce a linear response up to 160% of full load current (320 mA).
- Band edge indicating LEDs, **AUTO/MANUAL SWITCH**, **DRAG HANDS RESET** pushbutton, **NEUTRAL LIGHT**, Operations Counter, as well as **EXTERNAL SOURCE** and **VOLTMETER TEST TERMINALS** are standard.

INPUTS

Voltage: Nominal 120 V rms, 60 Hz. A two-wire input, requiring less than 3 W at 97 V rms to 140 V rms, provides all power requirements. The burden imposed on this input is 10 VA or less. The input will withstand 240 V rms for 1 sec. The unit should be powered from a voltage transformer or from the voltage to be controlled. 240 V ac Motor/Control Power and 50 Hz Operating Frequency are available as options.
Load Current: Line drop compensation is provided by a current transformer input with a 0.2 A full scale rating. A Beckwith Electric model M-0121 (5 A to 0.2 A) or M-0169 (5 A or 8.66 A to 0.2 A) Auxiliary Current Transformer is available when required. The burden imposed on the current source is 0.03 VA or less for currents up to 400 mA. The input will withstand two times nominal max. continuous, 5 A for 1 sec.
Circulating Current: Parallel operation of regulators or transformers is provided by an optional current transformer input with a 0.2 A full scale rating. An input of 0.2 A at 90° gives approximately 24 V correction for parallel operation. The burden imposed on the current source is 0.01 VA or less.
Auto Disable: A jumper provided on the rear terminal block can be removed and replaced by a lockout device, such as the M-0127 Ac Current Relay, which will disable automatic operation of the M-0355.
Non-Sequential Operation: The timer on the M-0355 can be reset between tapchanger operations by applying 120 V ac to an external connection provided on the rear terminal block.
Voltage Reduction: Applying 120 V ac to the optional first, second, or both external connections provided on the rear terminal block will implement a three step reduction in the voltage setpoint.
Reverse Power Flow (RPF) Operation: An external connection is provided on the rear terminal block that can be connected to an external RPF detector, which will recognize when a system power reversal exists and command the M-0355 accordingly.

FRONT PANEL CONTROLS

VOLTAGE LEVEL: 105 V to 135 V with a scale accuracy calibration of ±1.0 V rms of setting.
BANDWIDTH: 1.5 V to 6.5 V with a scale accuracy calibration of ±10% of setting.
TIME: 0 to 120 sec. with a scale accuracy calibration of ±10% of setting or ±2 seconds, whichever is greater.
LINE DROP COMPENSATOR Dial: 0 to ±24 V with a scale accuracy calibration of ±10% of setting at 200 mA.
POLARITY SWITCHES: Two-position switches can be set in the **±R** and **±X** positions.
OPERATE/TEST CONTROL: When this switch is in the **TEST** position, the Line Drop Compensator is deactivated, and the voltage may be raised and lowered by the uncalibrated control to test the band limits.

LED INDICATORS

The **RAISE** and **LOWER** LEDs will light to indicate when the voltage is outside the band and a tapchange will occur after the timer times out. With a slowly varying input, operation of the LEDs and initiation of timing is very sharp with 0.2 V hysteresis. The **NEUTRAL LIGHT** will light to indicate that the regulator or transformer is in the neutral position. The LEDs have an expected life of 25 years.

OUTPUT CONTACTS

Two output contacts from the raise and lower starter relay, arranged in a double-break configuration, rated at 7.5 A at 120 V ac and 5 A at 240 V ac inductive load.

VOLTAGE MEASUREMENT ACCURACY

Use of true rms voltage detection circuitry allows the M-0355 to exceed the ANSI C57.12.10-1988 and C57.15-1986 1% specification with up to 10% total harmonic distortion on the input (the ANSI Standard does not include a distortion specification). The circuit used in other controls may give a waveshape error greater than the total 1% allowed by the ANSI Standard for LDC, temperature and frequency combined.

RESPONSE TIME

The M-0355 will respond to 5/8% voltage change in 0.2 sec., ensuring freedom from hunting on minimum bandwidth. The timer starts when the voltage goes outside the band and resets within a few milliseconds upon return to band or when reset by an external contact in the Non-Sequential Mode.

ENVIRONMENTAL

Temperature Range: Stated accuracies are maintained from –40° to +80° C.
Humidity: Stated accuracies are maintained under 95% relative humidity (non-condensing).
Fungus Resistance: A conformal printed circuit board coating inhibits fungus growth.

TRANSIENT PROTECTION

Input and output circuits are protected against system transients. The M-0355 will pass all requirements of ANSI/IEEE C37.90.1-1989, which defines oscillatory and fast transient surge withstand capability. All inputs and outputs will withstand 1500 V ac to chassis or instrument ground for one minute. Voltage inputs are electrically isolated from each other, from other circuits, and from ground.

PHYSICAL

Size: 18" high x 10-1/4" wide x 3-11/16" deep (45.7 cm x 26.0 cm x 9.4 cm).
Approximate Weight: 6.5 lb (2.9 kg). **Approximate Shipping Weight:** 8.5 lb (3.9 kg).

PATENT & WARRANTY

The M-0355 Tapchanger Control is covered by U.S. Patents 3,721,894 and 4,323,838; and Canadian Patent 985,368, and carries a two year warranty from date of shipment.

ISO 9001:1994 Registered

BECKWITH ELECTRIC CO., INC.

Printed in U.S.A. 3/95

WARNING

DANGEROUS VOLTAGES, capable of causing death or serious injury, are present on the external terminals and inside the equipment. Use extreme caution and follow all safety rules when handling, testing or adjusting the equipment. However, these internal voltage levels are no greater than the voltages applied to the external terminals.

DANGER! HIGH VOLTAGE

– This sign warns that the area is connected to a dangerous high voltage, and you must never touch it.

PERSONNEL SAFETY PRECAUTIONS

The following general rules and other specific warnings throughout the manual must be followed during application, test or repair of this equipment. Failure to do so will violate standards for safety in the design, manufacture, and intended use of the product. Qualified personnel should be the only ones who operate and maintain this equipment. Beckwith Electric Co., Inc. assumes no liability for the customer's failure to comply with these requirements.

– This sign means that you should refer to the corresponding section of the operation manual for important information before proceeding.

Always Ground the Equipment

To avoid possible shock hazard, the chassis must be connected to an electrical ground. When servicing equipment in a test area, the Protective Earth Terminal must be attached to a separate ground securely by use of a tool, since it is not grounded by external connectors.

Do NOT operate in an explosive environment

Do not operate this equipment in the presence of flammable or explosive gases or fumes. To do so would risk a possible fire or explosion.

Keep away from live circuits

Operating personnel must not remove the cover or expose the printed circuit board while power is applied. In no case may components be replaced with power applied. In some instances, dangerous voltages may exist even when power is disconnected. To avoid electrical shock, always disconnect power and discharge circuits before working on the unit.

Exercise care during installation, operation, & maintenance procedures

The equipment described in this manual contains voltages high enough to cause serious injury or death. Only qualified personnel should install, operate, test, and maintain this equipment. Be sure that all personnel safety procedures are carefully followed. Exercise due care when operating or servicing alone.

Do not modify equipment

Do not perform any unauthorized modifications on this instrument. Return of the unit to a Beckwith Electric repair facility is preferred. If authorized modifications are to be attempted, be sure to follow replacement procedures carefully to assure that safety features are maintained.

PRODUCT CAUTIONS

Before attempting any test, calibration, or maintenance procedure, personnel must be completely familiar with the particular circuitry of this unit, and have an adequate understanding of field effect devices. If a component is found to be defective, always follow replacement procedures carefully to that assure safety features are maintained. Always replace components with those of equal or better quality as shown in the Parts List of the Instruction Book.

Avoid static charge

This unit contains MOS circuitry, which can be damaged by improper test or rework procedures. Care should be taken to avoid static charge on work surfaces and service personnel.

Use caution when measuring resistances

Any attempt to measure resistances between points on the printed circuit board, unless otherwise noted in the Instruction Book, is likely to cause damage to the unit.

TABLE OF CONTENTS

TAPCHANGER CONTROL
Instruction Book
Version A

In our efforts to provide accurate and informative technical literature, suggestions to improve clarity or to correct errors will receive immediate attention. Please contact the Marketing Services Department, specifying the publication and page number.

INTRODUCTION

Beckwith Electric Company produces many step-voltage regulator and load tapchanging (LTC) transformer controls in a family known collectively as the "M-0270 Line." All controls in this line are adapted from the same basic electronic assemblies, but are configured differently in order to be exact replacements for controls produced by other manufacturers.

This Instruction Book describes basic control operation, plus the operation of the various optional features. It does not treat the aspects of the control that are specific to a particular model, e.g., the outline dimensions, external connections and installation procedures. These are described in the individual Application Guides for each model. Further, three components of the basic control—the operations counter, the wiring harness and the enclosure—will differ and are specified in the Application Guide. In general, material covered in an Application Guide or Instruction Book is not repeated in the other; a complete set of instructions is comprised of the Application Guide for a particular model plus this Instruction Book, which is applicable to the entire M-0270 Line.

GENERAL DESCRIPTION

All modern regulator and LTC transformer controls operate on very similar principles. Therefore, the controls in the M-0270 Line use the same basic printed circuit board, the B-0338. The additional parts required for options that can be added to the B-0338 are indicated with dotted outlines in Figure 6, Component Location. For a list of additional parts required for each option, refer to the **PARTS LIST**. All drawings show the basic control with all of the options that can be mounted on that board.

The following is a list of the options that could be included in the Tapchanger Control:

Multi-Step Voltage Reduction Option
Paralleling Option
Note: Also requires, minimally, the addition of the M-0115 Parallel Balancing Module.

Reverse Power Flow Option
Note: This option is available only on models M-0271, M-0293 and M-0355.
Note: Also requires a supplemental reverse power flow detector and that the regulator or transformer be provided with a regulated nominal 120 V supply on the source side.

240 V Motor/Control Power Option
50 Hz Operating Frequency Option

Circuitry to support motor current sensing is only required for a few models, and is therefore incorporated by adding an additional printed circuit board, the B-0356. A separate component location, parts list and schematic show the components on this board.

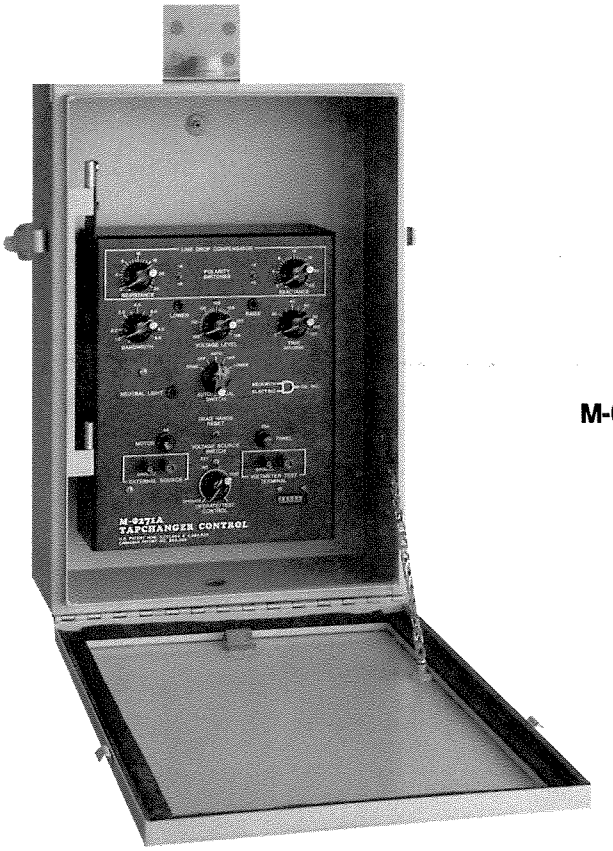

M-0271A Replacement Regulator Control in a Siemens Control Cabinet

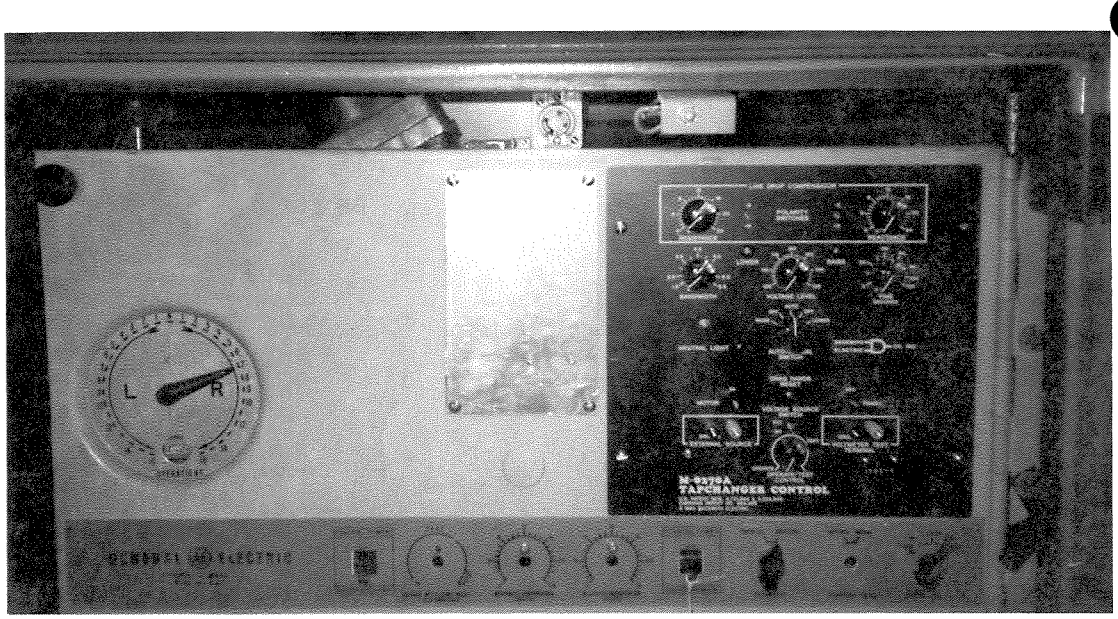

M-0270A Replacement LTC Transformer Control in a General Electric LRT-68 Control Cabinet

FIGURE 1 Two Common Applications of Beckwith Electric Replacement Controls

All controls include true rms voltage measurement circuitry that ensures accurate sensing in the presence of harmonic distortion on the input voltage and current signals. The **LINE DROP COMPENSATOR** features linear operation up to 160% of full load current (320 mA), a solid-state phase shifter using an RC network for reactance compensation and the ability to accurately set plus or minus values for both the resistance and reactance quantities.

The controls listed below are primarily used as regulator controls (refer to Figure 2 for Block Diagram for Regulator Controls):

M-0271
M-0293
M-0323
M-0324
M-0345
M-0355
M-0356

The following controls are primarily used as transformer controls (refer to Figure 3 for Block Diagram for Transformer Controls):

M-0270
M-0278
M-0279
M-0280
M-0338
M-0379

THEORY OF OPERATION

The theory of operation is described at the level of the printed circuit board. Refer to Figure 2 B-0338 Block Diagram for Regulator Controls or Figure 3 B-0338 Block Diagram for Transformer Controls, and Figures 7a and 7b B-0338 Schematics, which show all of the basic and optional functions. For M-0271 models, refer to Figures 7a and 7c B-0338 Schematics. For units that use the Motor Current Sensing Board, also refer to Figure 4 B-0356 Block Diagram and Figure 9 B-0356 Schematic.

The control uses two nominal 120 V ac inputs: "Motor Power" and "Voltage". The Voltage circuit is the signal applied to the sensing transformer, T1, from which the knowledge of the regulator or LTC transformer voltage output is derived. The Motor Power is used for the operations counter, **DRAG HANDS RESET**, and **NEUTRAL LIGHT**, as well as for driving the LTC motor. For these purposes, the Motor Power voltage need not be so closely regulated. However, there are times when this must reflect the desired system regulated voltage, such as during system operation under reverse power flow. (See also the pertinent Application Guide for particular application information).

The Motor Power circuit includes the Raise and Lower relays, the **INTERNAL/EXTERNAL VOLTAGE SOURCE SWITCH**, and the **AUTO/MANUAL SWITCH**. The **VOLTAGE SOURCE SWITCH**, when in the **INTERNAL** position, connects the motor power circuit to the motor power input on TB1-9 and the voltage input to TB1-10 of the terminal block. In the **EXTERNAL** position, the motor circuit and the voltage input are connected to the **EXTERNAL SOURCE** binder post (red) located on the front panel. Power may be applied to the unit from an external source and the relay tested without backfeeding power into the voltage transformer. The Raise and Lower relays are arranged with two normally open contacts and two normally closed contacts from the opposite relay in series. This configuration provides increased interruption capability, protection from welded relay contacts and assurance that simultaneous Raise and Lower outputs are not possible.

POWER SUPPLY

Transformer T3 reduces the voltage to 36 V rms center-tapped. This voltage is full-wave rectified by diode bridge D11 to produce +24 V dc and –24 V dc unregulated voltage. Capacitors C17, C18, C20 and C21 filter the unregulated voltages. VR1 and VR2 are individual voltage regulators that produce regulated +15 V and –15 V for use by the sensing and timing circuitry. The precision 10.00 V dc reference voltage is produced by VR3.

LINE DROP COMPENSATOR (LDC)

The Line Drop Compensator produces variable voltages representative of the line R and X voltage drops that are summed with the output of the sensing transformer T1 by amplifier U4B. Current transformer T2 reduces the load current input to the level required by the LDC circuitry. This current produces a voltage across R66 and R68 that is proportional to the load current.

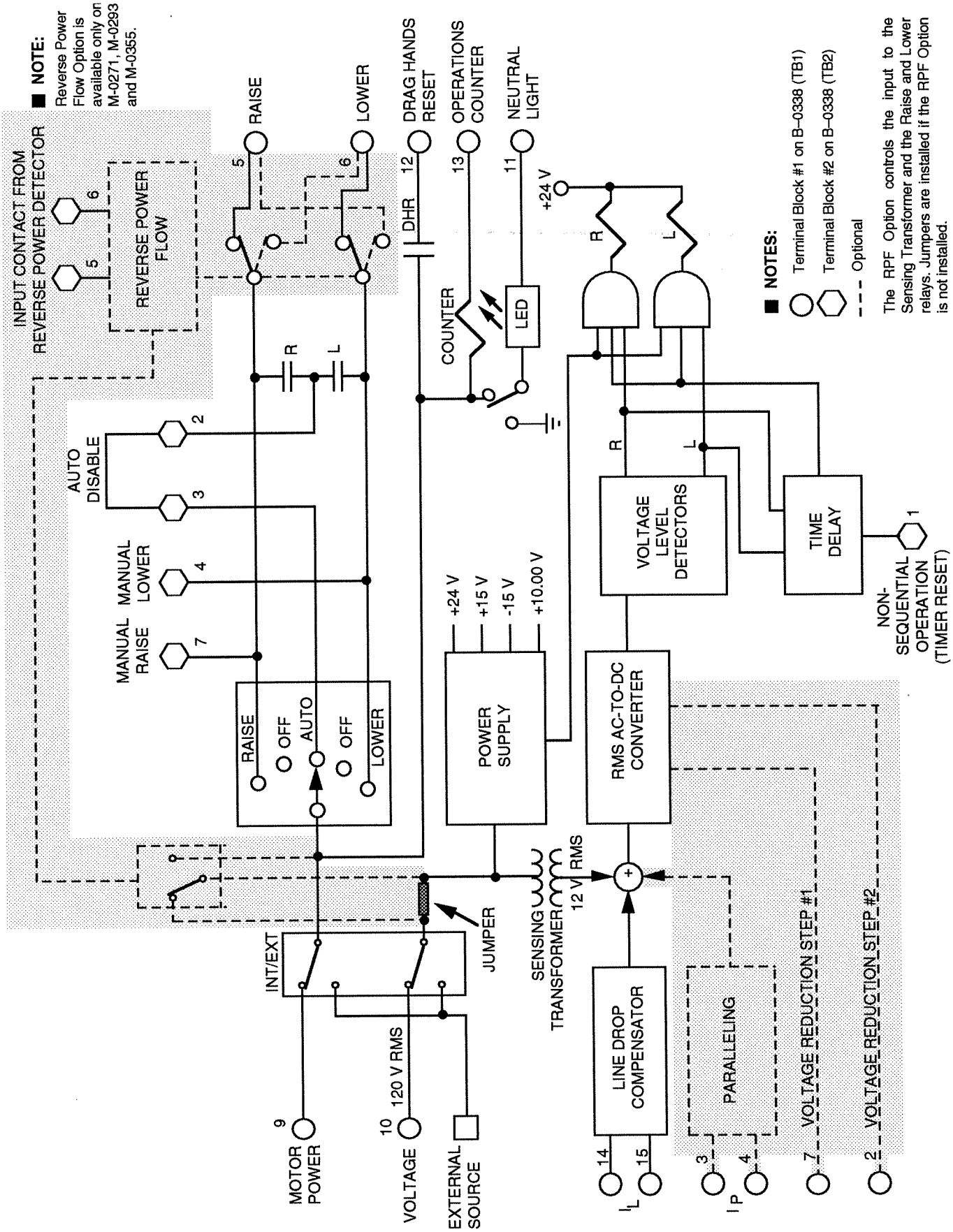

FIGURE 2 Main PC Board B-0338 Block Diagram for Regulator Controls

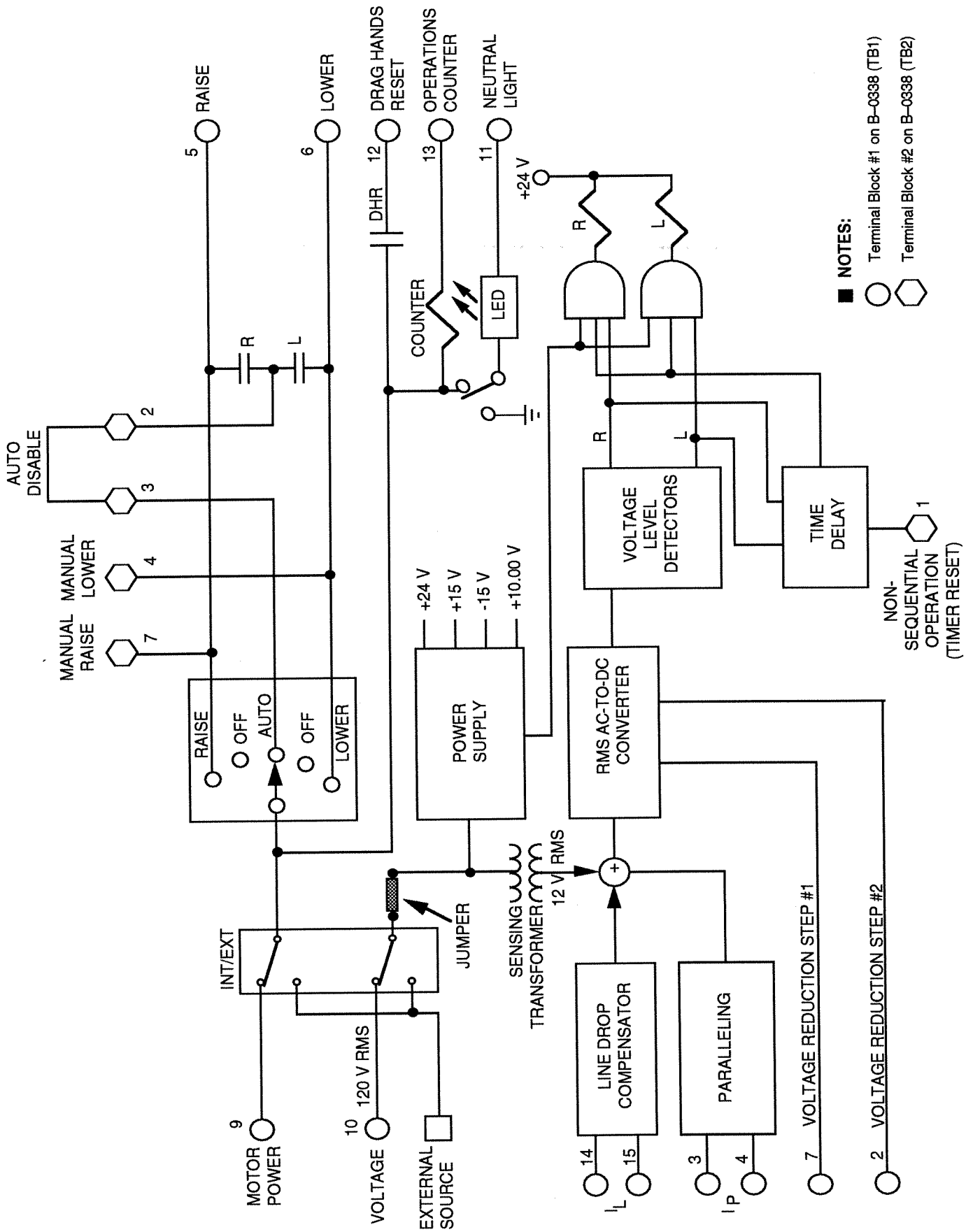

FIGURE 3 Main PC Board B-0338 Block Diagram for Transformer Controls

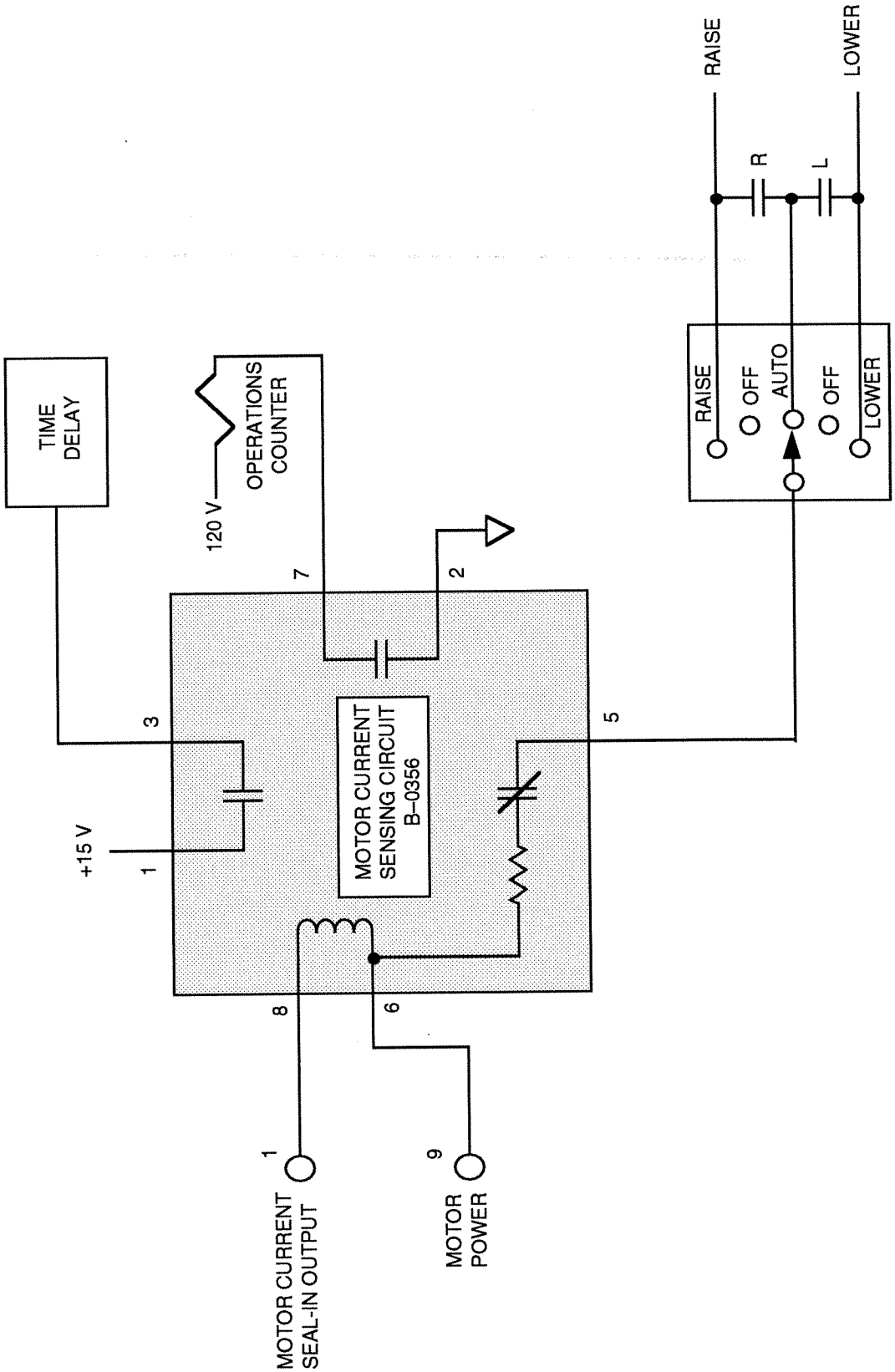

FIGURE 4 Motor Current Sensing Board B-0356 Block Diagram

Amplifier U2A-Pin 1 is configured as a gain of +1 or –1 depending on the setting of the **RESISTANCE** (±**R**) polarity switch (S2). Potentiometer R24 is the front panel **RESISTANCE** control that produces a voltage scaled from 0 to 24 V rms when the load current is 0 to 0.2 A. In the +**R** polarity position, the voltage output of U2A-Pin 1 is 180° out of phase with the load current. Amplifier U2B-Pin 7 and the associated RC network is the 90° phase shifter for the reactance compensator. Amplifier U2D-Pin 14 has a gain of +1 or –1 depending on the setting of the **REACTANCE** (±**X**) polarity switch (S1). R1 is the front panel **REACTANCE** control that scales the reactance voltage to 24 V rms at 0.2 A load current. When the ±**X** polarity switch is in the +**X** polarity position, the voltage output of U2D-Pin 14 is lagging the load current by 90°. This voltage is 180° out of phase with the voltage drop in the reactive component of the line drop.

The R and X voltages are summed with the output of the voltage transformer by amplifier U4B. The output of U4B Pin 7 is the scaled voltage that represents the voltage at a load center some distance from the transformer.

RMS AC-TO-DC CONVERTER AND VOLTAGE LEVEL DETECTORS

The Rms Ac-to-Dc Converter (U5) converts the ac voltage from U4B-Pin 7 to a dc level proportional to the true rms value. The output of U5 is offset by an input from the **VOLTAGE LEVEL** control R45, such that this output voltage is approximately 5.00 V dc when the load voltage (not equal to local voltage if LDC is used) is equal to the **VOLTAGE LEVEL** control setting.

Resistors R46, R56, and R49 combined with the **BANDWIDTH** control (R58) determine the bandwidth. The voltages at U4C-Pin 9 and U4D-Pin 12 are equally spaced around +5.00 V dc and form the upper and lower band edges. With the **BANDWIDTH** control set at 1.5 V, R58 is short-circuited, and the voltage across R56 determines the minimum (1.5 V) bandwidth. With the **BANDWIDTH** set at 6.5 V, R58 is at its maximum value of 500 Ω. Resistors R48 and R51 provide approximately 0.4 V rms hysteresis at each band edge.

When the dc output voltage from U5 increases above the upper band edge, comparator U4C-Pin 8 output goes to approximately +13 V dc, and the **LOWER** LED (D5) lights to indicate that the transformer tapchanger should lower the tap position. Similarly, when the dc output of U5 decreases to a level below the lower band edge, comparator U4D-Pin 14 output goes to approximately +13 V dc, and the **RAISE** LED (D4) lights to indicate the voltage should be increased.

The logic AND-gate U3B-Pin 6 blocks the Lower and Raise signals previously discussed from energizing the output relays until both of the following conditions are satisfied.

1. The timer output U1D-Pin 16 has switched to its positive state (approximately +13 V dc), indicating the time delay, set on the **TIME** control, has been completed.

2. The output of AND-gate U3A-Pin 9 has switched to its positive state (approximately +14 V dc), indicating the power supply voltage is on and stable.

RELAY DRIVE CIRCUITRY

The Raise and Lower output relays are energized when AND-gate U3C-Pin 10 or U3B-Pin 6 outputs go high. Amplifiers U2C-Pin 8 and U1B-Pin 7, with the associated input networks, ensure that the output relays remain energized for a minimum of 200 ms. This eliminates the possibility of relay chattering, which can be caused by motor contactor noise coupling into the voltage circuit and resetting the voltage level detectors.

TIME DELAY

A variable time delay of 0 to 120 seconds delays the closing of the output relays to ensure that short excursions of the voltage outside of the voltage band do not cause excessive tapchanger action. The timer consists of amplifier U1C-Pin 10 that detects when the Raise or Lower comparator output is greater than 11 V dc. When this occurs, the output of U1C-Pin 10 switches to approximately +15 V dc, and charge is accumulated in capacitors C1 and C2 through resistor R43. Comparator U1D-Pin 16 output switches to +15 V when the voltage across C1 and C2 exceeds the threshold determined by the setting of the **TIME** potentiometer R42. The voltage across the capacitor is reset when one of the output relays closes. Diodes D2F and D2G, and capacitor C12 ensure that the Raise or Lower output remains on until the sensed voltage moves back inside the voltage band.

NON-SEQUENTIAL OPERATION

The operation of the relay can be interrupted during tapchanger operation by applying 120 V rms to TB2-1 (Timer Reset) on the rear terminal block through an external contact. This causes the output relay to de-energize and will block relays K1 and K2 from operating until the reset is removed. This function can be used to cause the regulator or transformer to wait for the Tapchanger Control to time out between tapchanges.

MOTOR CURRENT SENSING RELAY CIRCUITRY

■ **NOTE:** Applicable to M-0324, M-0345 and M-0355 only.

When the input voltage level is outside the **BANDWIDTH** setting limit, the variable 0-120 second time delay circuit (Q6) starts timing, when either the raise or lower comparator output is greater than 11 V dc. After timer output Q6-pin 16 times out and switches to approximately 14 V, either Q3-pin 6 or Q3-pin 10 output will switch high and the output relay will energize. When the tapchanger motor starts to turn, the cam-operated holding switch on the tapchanger closes. The motor current is now fed through transformer T1 of the B-0356 Current Sensing Relay Assembly and the tapchanger is now energized independently to the manual or automatic position of the control switch. Output contacts from P1-7 and 2, 1 and 3 of the B-0356 Current Sensing Relay Assembly are closed when the motor is running, and operate the operation counter and trigger the time delay on break timer U1.

When the time delay is triggered, the normally closed contact betweeen terminals 5 and 6 of the B-0356 opens to remove motor load duty from either raise or lower relay output contact, prior to the completion of the tapchange.

The normally open contact between terminal 1 and 3 of K2 closes and holds the output signals of timer Q6 of the Voltage Regulator Control Assembly from reset during completion of a tapchange. Once the holding switch opens, the motor stops running and the current sensing relay de-energizes. The timer U1 on the B-0356 will keep K2 energized for a fixed time delay of two seconds.

Two seconds after the holding switch opens, K2 de-energizes and the normally closed contact between terminal 5 and 6 will allow the tapchanger control to initiate another tapchange through the **AUTO/MANUAL SWITCH** if the voltage level still remains outside of the **VOLTAGE** setpoint limit.

SCADA CONNECTIONS

Terminals on the B-0338 printed circuit board accommodate user access to Auto Disable, Manual Raise, and Manual Lower functions. Refer to Figure 2 for regulator controls or Figure 3 for transformer controls.

As shipped, terminals B-0338 TB2-2 and TB2-3 will be jumpered, completing the 120 V ac circuit for automatic operation. This jumper may be replaced with a form b relay contact. Automatic operation will then be disabled when the relay is powered.

Terminals B-0338 TB2-4 and TB2-7 are designated Manual Lower and Manual Raise respectively. Two independent form a contacts can be used to apply the hot side of 120 V ac to each of these points to accomplish remote lower or raise operation just as an operator on site could accomplish with the manual mode of operation.

OPTIONS

VOLTAGE REDUCTION (3-STEP)

This option allows reduction of the bandcenter setpoint by closing contacts external to the control, which applies 120 V rms to either TB1-7 or TB1-2 or both terminals. The voltage setpoint will be initially reduced by 0 V to 10 V, depending on the setting of R77, when relay K5 is energized by the external contact TB1-7 (Voltage Reduction Step #1).

TB1-7 and TB1-2 (Voltage Reduction Step #2) are used together to allow a second and third level of voltage reduction. When 120 V rms is applied to TB1-2 alone, the voltage bandcenter will be reduced twice the amount achieved by the TB1-7 voltage reduction input. The third step is achieved by powering TB1-7 and TB2 simultaneously, accomplishing a voltage reduction equal to 2.7 times the amount of the first step alone.

VOLTAGE REDUCTION SETTING MULTIPLIER	APPLY 120 V ac TO TERMINAL #
X1	7 Only
X2	2 Only
X2.7	2 and 7

TABLE 1 Multi-Step Voltage Reduction External Connections

By example, voltage reductions of 2.5 V, 5.0 V and 6.75 V (2.1%, 4.2% and 5.6%) can be achieved by adjusting R77 for 2.5 V reduction when TB1-7 is connected to 120 V ac.

PARALLELING

Transformer T4, with capacitor C30, produces a voltage at the T4 secondary approximately 90° out of phase with the current in the primary of T4. This voltage is summed with the sensing input and line drop compensator voltages by U4B-Pin 7 through resistors R83 and R84. Variable resistor R84 allows adjustment from 12 V rms to 36 V rms at 0.2 A primary current. The paralleling input is intended for use in circulating paralleling schemes.

REVERSE POWER FLOW

■ **NOTE:** Reverse Power Flow Option available only on models M-0271, M-0293 and M-0355.

When the externally-connected reverse power flow detector closes the contact between TB2-5 and TB2-6 (or opens it depending on whether a Form A or Form B contact is used), relays K3 and K4 are energized. Relay K4 reverses the input sensing voltage to the source-side input, and K3 reverses the direction of the Raise and Lower output to the tapchanger motor.

TEST PROCEDURE

EQUIPMENT REQUIRED

1. Regulated 60 Hz [50 Hz] source with variable amplitude from 60 to 140 Vrms.
2. 2 A, 60 Hz [50 Hz] current source, regulated to 200 mA, with phase angle settings of 0° and +90° relative to the voltage source.
3. High impedance true rms digital multimeter (DMM) with accuracy on ac of at least ±0.1% of reading, Hewlett-Packard 3466A or equivalent.
4. +15 V dc voltage source (only required for B-0356 board).

TEST SETUP

Make the electrical connections as required per the test setup as shown in Figure 5. Also refer to the Component Location (Figure 6) and Schematics (Figures 7a, 7b and 7c). For units with the Motor Current Seal-In Board, also refer to Figures 8 and 9. The R and C shown in Figure 5 should be adjusted to give 100 mA rms current when S1 is in the P or LDC position. S2 is used to select in-phase (Resistive) current or 90° leading (–X Reactive) current. Indicator lamps and pushbuttons are suggested to facilitate testing and can be eliminated if other methods are used.

The fixed 120 V rms supply should be well regulated so that the amplitude does not change more than 0.05 V rms when the Raise or Lower output relays are energized.

DETERMINING VOLTAGE BANDCENTER

When checking the **VOLTAGE LEVEL** settings, the exact voltage where the **RAISE** and **LOWER** LEDs light should be recorded. The voltage level bandcenter is calculated as the average of these voltages.

$$\text{Bandcenter} = \frac{V_{LOWER} + V_{RAISE}}{2}$$

The band-edge hysteresis causes the indicators to turn on and off at slightly different voltages.

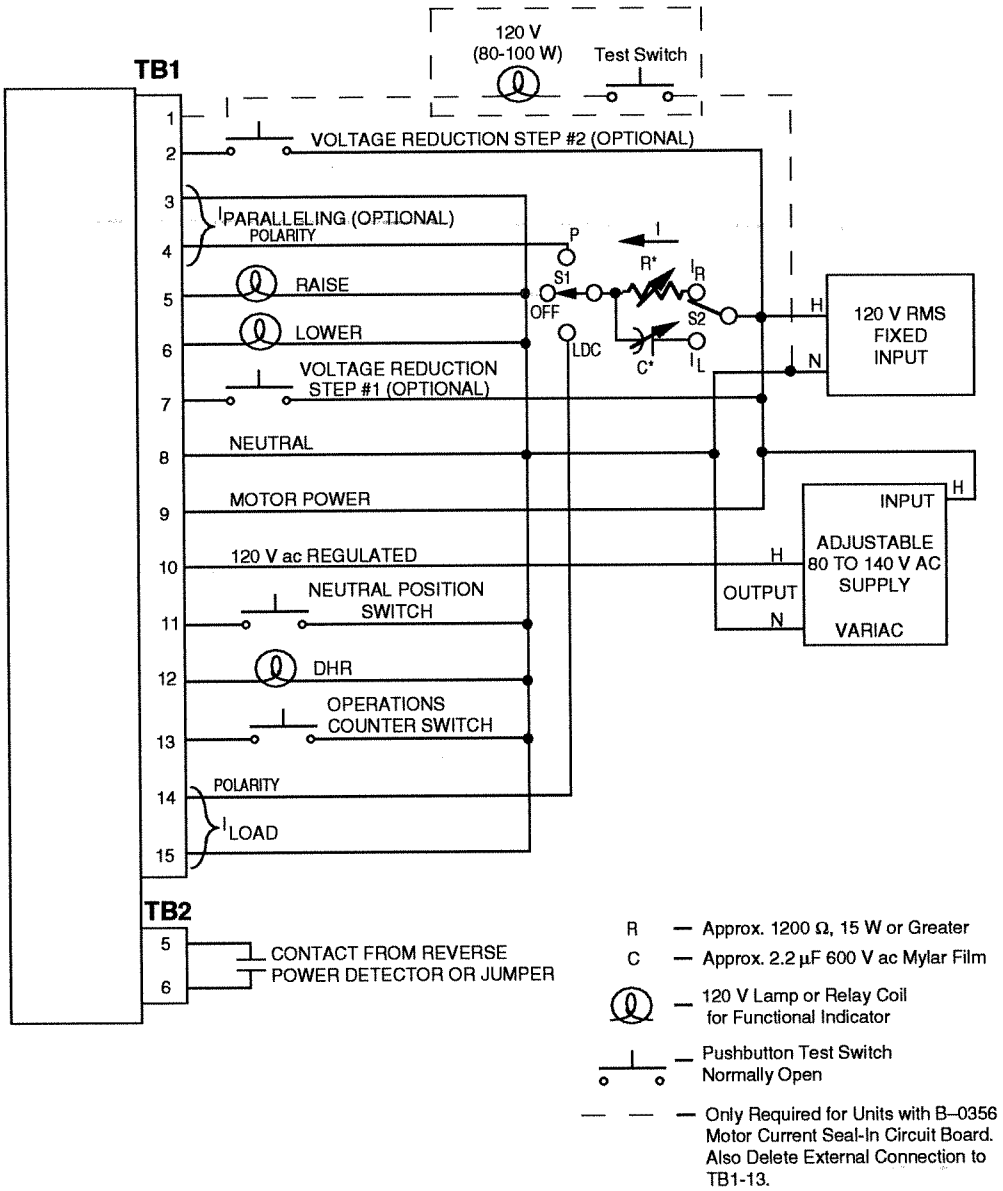

*■ **NOTE:** Adjust for I = 100 mA when S1 is in the P or LDC position.

● **WARNING: In no case should the load current circuit be interrupted with the regulator or transformer energized.**

Do not remove auxiliary current transformer without shorting the circuit inputs. Death or severe electrical shock can occur.

FIGURE 5 Test Setup Diagram

B-0338 TEST PROCEDURE

VOLTAGE LEVEL TEST

Initial Settings

1. Set the **BANDWIDTH** at 2 V.
2. Set the **TIME** at minimum.
3. Set the **RESISTANCE** and **REACTANCE** dials to 0.

Procedure

1. Set the **VOLTAGE LEVEL** to 120 V. Be careful to position the **VOLTAGE LEVEL** dial pointer exactly in the center of the line on the dial grid. Slowly increase the voltage past 121 V. Record the voltage where the **LOWER** LED lights. Slowly decrease the voltage past 119 V. Record the voltage where the **RAISE** LED lights. Calcuate the bandcenter as described previously.

2. Repeat step 1 at the 105 V rms and 135 V rms settings.

3. The calculated values should be within ±1 V rms of the dial setting.

BANDWIDTH TEST

1. Set the **BANDWIDTH** control to 2 V.

2. Check the actual bandwidth by calculating the difference between V_{LOWER} and V_{RAISE}.

3. Repeat at the 4.0 V and 6.0 V bandwidth settings.

4. The calculated bandwidth should be within ±10% of the setting.

TIME TEST

■ **NOTE:** The integrating timer circuit does not quickly reset when the voltage moves inside the band setting. To ensure the timer is reset, one of the output relays must close.

1. With the **TIME** control set at 0, adjust the input voltage outside the voltage band. After the output relay closes, readjust the voltage to a point within the band.

2. Adjust the **TIME** control to 40 seconds.

3. Increase the voltage until the **LOWER** LED lights. Using a stopwatch, measure the time required for the Lower relay to pick up. The Lower indicator should light.

4. Decrease the voltage until the **LOWER** LED turns off.

5. Reduce the voltage until the **RAISE** LED turns on. Measure the time required for the Raise relay to pick up. The Raise indicator should light.

6. Increase the input voltage until both lights are off.

7. The measured times should be within ±10% of setting or ±2 seconds, whichever is greater.

8. Repeat steps 2 through 7 at the 80 and 120 seconds time delay settings.

LINE DROP COMPENSATOR TEST

Initial Settings

1. Set the **POLARITY SWITCHES** to +R and +X.

2. Set **RESISTANCE** dial to 0, the **REACTANCE** dial to 0.

3. Set the **VOLTAGE LEVEL** at 120.0, **BANDWIDTH** to 2.0.

4. Set the **TIME** dial at 0 seconds.

Procedure

1. Accurately determine the bandcenter and record.

2. Apply 100 mA in-phase current to the LDC TB1-14. Switch S1, shown in Figure 5, should be in the LDC position, S2 in the I_R position.

Resistance

3. Set the **RESISTANCE** dial to 24.0; the **RAISE** LED should light.

4. Increase the input voltage, and determine the new voltage bandcenter. The change in bandcenter should be +12 V ±1.2 V from the value recorded in step 1.

5. Set the **±R POLARITY SWITCH** to the **–R** position.

6. Decrease the input voltage, and determine the voltage bandcenter. The change in bandcenter should be -12 V ±1.2 V from the value recorded in step 1.

Reactance

7. Set the **RESISTANCE** dial to 0 and the **REACTANCE** dial to 24.

8. Accurately determine the new bandcenter. The change in bandcenter voltage should be +0.6 V ±1.2 V from the value recorded in step 1.

9. Apply 100 mA leading (capacitive) current to the LDC TB1-14. Set S1 in the LDC position, S2 in the I_L position.

10. Set the **±X POLARITY SWITCH** to **+X**.

11. Decrease the input voltage to approximately 108 V rms, and determine the new bandcenter voltage. The change in bandcenter should be –12 V ±1.2 V from the level recorded in step 1.

12. Repeat steps 10 and 11 with polarity set at **–X**. The bandcenter should increase to approximately 132 V rms. The change in bandcenter from step 1 should be +12 V ±1.2 V.

AUTO/MANUAL SWITCH

Verify that the **AUTO/MANUAL SWITCH** operates properly in the **RAISE**, **OFF**, and **LOWER** positions.

VOLTAGE SOURCE SWITCH

1. With the **AUTO/MANUAL SWITCH** in the **OFF** position, switch the **VOLTAGE SOURCE SWITCH** to **EXT.**

2. Verify that the **AUTO/MANUAL SWITCH** does not operate and that no voltage is present on the front panel **VOLTMETER TEST TERMINAL.**

3. Apply 120 V rms to the **EXTERNAL SOURCE** binder posts (Red terminal is Hot and Black terminal is Neutral).

4. Verify that the control operates in the **AUTO** mode with power applied from the front panel.

5. Return the **VOLTAGE SOURCE SWITCH** to the **INT.** position.

DRAG HANDS RESET

Verify that the **DRAG HANDS RESET** switch operates by the use of a lamp or ac relay load from terminal TB1-12 to Neutral terminal TB1-8.

> ■ NOTE: A load should be applied to terminal TB1-12 if a voltmeter is used to verify the **DRAG HANDS RESET** operation. With terminal TB1-12 open-circuited, an ac voltage will appear on the terminal through the arc suppression components R75 and C32.

NEUTRAL LIGHT

1. Set switch S6 on the B-0338 printed circuit board to Position 0.

2. With terminal TB1-11 grounded, the **NEUTRAL LIGHT** should light.

3. Set switch S6 to Position 1.

4. Jumper TB1-10 to TB1-11, which applies 120 V to the **NEUTRAL LIGHT** circuit.

5. The **NEUTRAL LIGHT** should light.

6. Remove the jumper between TB1-10 and TB1-11, and put switch S6 in the appropriate position for the control. (McGraw-Edison replacement controls require that the switch be in Position 1; all others should be in Position 0.)

OPERATIONS COUNTER

Grounding terminal TB1-13 will advance the operations counter one half-digit. Removing the ground will complete the operation.

REVERSE POWER FLOW OPTION

■ **NOTE:** Reverse Power Flow Option available only on models M-0271, M-0293 and M-0355.

1. Disconnect the jumper, shown in Figure 5, from TB1-9 to TB1-10.

2. Connect TB1-9 to the 120 V rms fixed input, and connect TB1-10 to the adjustable voltage supply.

3. Connect a digital voltmeter to the **VOLTMETER TEST TERMINAL** to monitor the sensing voltage.

4. Verify that the reading on the voltmeter changes as the adjustable voltage supply varies.

5. Place a jumper between TB2-5 and TB2-6.

6. Verify that the voltage reading on the voltmeter remains fixed as the sensing input is varied.

7. Use the **BANDCENTER** control on the front panel to cause the control to call for a Raise command.

8. The **LOWER** LED on the front panel of the control should light and, after the set time delay, the Raise indicator light on the test setup should light.

B-0356 TEST PROCEDURE

CONTACT RESISTANCE

1. Setup the test circuit as shown in Figure 5 and connect it to the unit.

2. Adjust the input voltage (VT) until the unit is calling for either **RAISE** or **LOWER** condition.

3. Push the external test switch button and hold it for a few seconds.

4. The **RAISE** or **LOWER** light should turn off.

5. Release the switch and notice that, after about 2 seconds time delay, the **RAISE** or **LOWER** light should turn on again.

COMPONENT REPLACEMENT PROCEDURE

EQUIPMENT REQUIRED

1. Solder sucking syringe or solder wick.

2. Soldering iron: Weller Controlled Output Soldering Station Model MTCPL, 60 W, 120 V, 50/60 Hz or equivalent with grounded tip.

COMPONENT REPLACEMENT PROCEDURE

When replacing integrated circuits or components, remove the board from the front panel as follows:

1. Remove all knobs by loosening the two setscrews on each knob.

2. Remove the nuts from all control shafts and switches.

3. Remove the small screw located on the front panel to the left of the **MOTOR** fuse.

4. Disconnect the wires to the **MOTOR** and **PANEL** fuse holders and Operations Counter using the quick disconnects provided. Note polarity of all connections.

5. Remove the four nuts and associated washers connecting the binder posts to the printed circuit board. Note how the washers are arranged and replace them in the same order.

6. The board may be carefully removed (save all hardware).

7. When replacing Dual-In-Line (DIP) packages, ensure the unit is oriented with Pin 1 in accordance with the Component Locations.

   ■ **NOTE:** The printed circuit board(s) are coated with a moisture resistant conformal coating. This coating must be removed from areas where components are to be replaced.

8. If a component needs to be changed, carefully scrape away the coating surrounding the component using a small, sharp knife, being careful not to damage the printed circuit paths.

9. Clip out the old component and discard.

10. Remove the clipped wires using the solder wick or syringe. Be sure to leave the holes clear to facilitate insertion of the new component.

    ▲ **CAUTION: Do not attempt to melt the solder and push the new component through the hole as the leads are likely to catch the edge of the foil and lift it off the board.**

11. When replacing integrated circuits provided with transipads, make sure to insert the unit into the transipad so that the tab fits into the slot. Once this is done, there is only one way to insert the combination into the printed circuit board.

CALIBRATION PROCEDURE

■ **NOTE:** The relay has been fully calibrated at the factory using highly sophisticated computer-controlled test equipment. There is no need to re-calibrate the units before initial installation. Further calibration is only necessary if a component was changed by the user during a repair procedure.

BANDWIDTH AND TIME

The **BANDWIDTH** and **TIME** controls are calibrated by adjusting the position of the control knob on the respective potentiometer shaft. Initially the knobs should be turned to the fully counter-clockwise position and adjusted so that the pointer is aligned with the small dot slightly counter-clockwise from the minimum scale setting. Further adjustments (if necessary) should be made at approximately half scale.

VOLTAGE LEVEL

The **VOLTAGE LEVEL** control is calibrated by adjusting R64 and R65 on the printed circuit board.

1. Set the **RESISTANCE** dial to 0, the **REACTANCE** dial to 0, the **BANDWIDTH** to 2 V, the **TIME** to 120 seconds, the **OPERATE/TEST** to the **OPERATE** position (switch detent).
2. Set the **VOLTAGE LEVEL** control to 135 V.
3. Adjust R64 so that the bandcenter is 135.0 V rms. (See the **TEST PROCEDURE** section for the bandcenter calculation).
4. Set the **VOLTAGE LEVEL** control to 105 V rms.
5. Adjust R65 so that the measured bandcenter is 105 V rms.
6. Repeat steps 2 through 5 until both ends are calibrated to within ±0.5 V rms.
7. Check the voltage bandcenter at the 120 V rms setting. The bandcenter should be 120 V rms ±0.4 V rms.
8. If the 120 V setting is not within specifications, repeat steps 1 through 7 at the 130 V rms and 110 V rms dial settings.

RESISTANCE AND REACTANCE

The **RESISTANCE** and **REACTANCE LINE DROP COMPENSATOR** controls are calibrated by adjusting R66 on the printed circuit board. Initially the knobs should be aligned with the small dot in the most counter-clockwise dial position.

1. Set the **RESISTANCE** control to 24, the **REACTANCE** control to 0.
2. Apply 100 mA in-phase current to the LDC. Set S1 in the LDC position, S2 in the I_R position.
3. Adjust R66 for exactly 12 V rms compensation.
4. Set the **RESISTANCE** control to 0, the **REACTANCE** control to 24.
5. Apply 100 mA leading (capacitive) current to the LDC. Set S1 in the LDC position, S2 in the I_L position.
6. Check for 12 V rms ±1 V compensation. If necessary, readjust R66 to equalize the errors in step 3 and step 6.

OPTIONS

VOLTAGE REDUCTION

Adjust R77 to achieve the desired reduction in bandcenter when 120 V rms is applied to terminal TB1-7 (Voltage Reduction Step #1).

PARALLELING SENSITIVITY

1. Apply 100 mA leading (capacitive) current to the paralleling input. Set S1 in the P position, S2 in the I_L position.
2. Adjust R84 for a sensitivity of 12 V, i.e., the bandcenter should change 12 V when paralleling current is applied and removed (S1 switched from the P to OFF position).

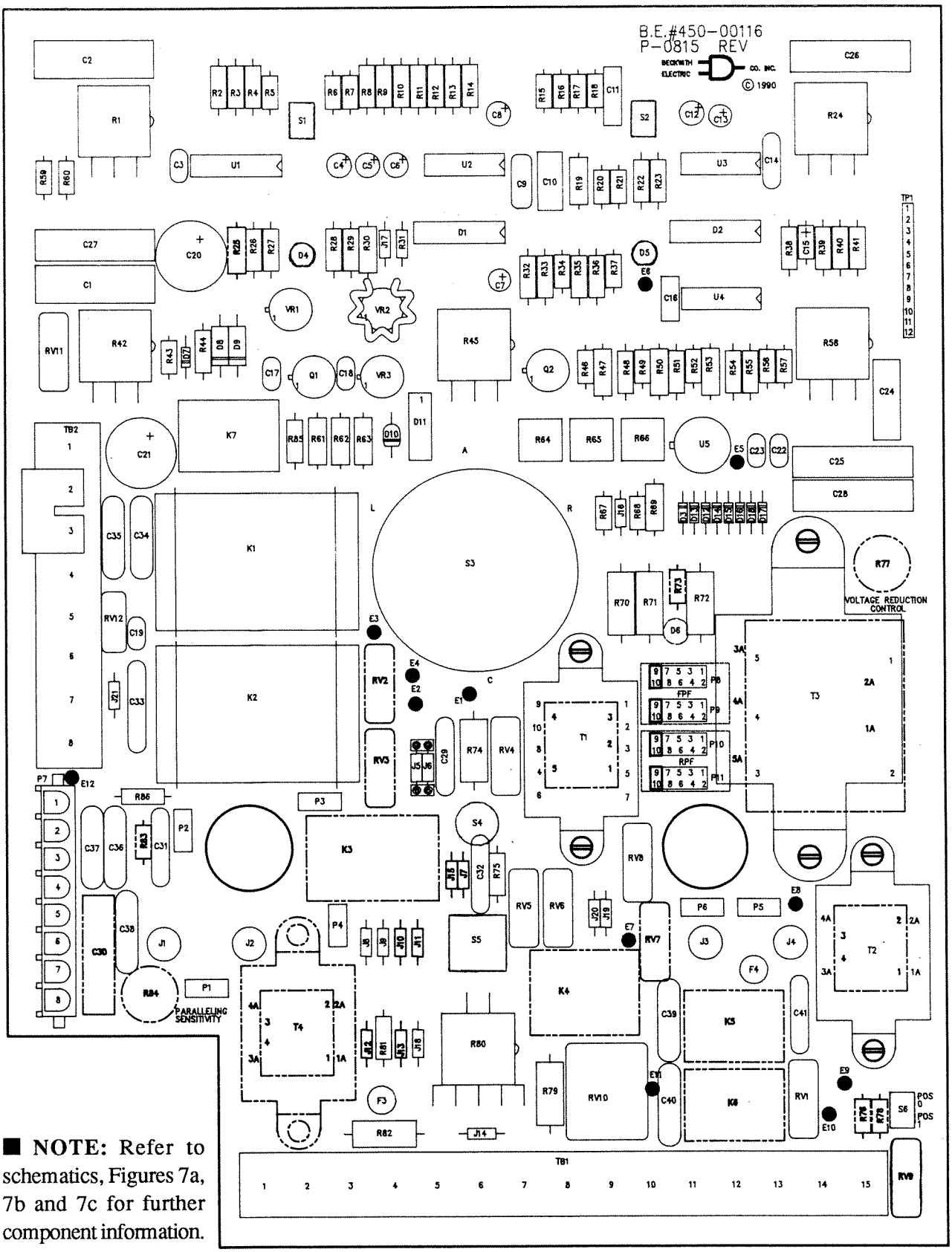

■ **NOTE:** Refer to schematics, Figures 7a, 7b and 7c for further component information.

FIGURE 6 Main Board B-0338 Component Location

PARTS LIST

M-0270 Line Tapchanger Control

This list includes all electrical and mechanical parts which could conceivably either require replacement or be lost. The **COMPONENT DESIGNATION** is the same as that appearing on schematics or referred to in Instruction Books.

The **BECO NUMBER** refers to an index maintained by the company. This lists the currently available device which may be substituted even though the device originally supplied is obsolete and no longer available. Parts marked by an asterisk* are not available from other sources. Either the original component or a current substitute will be carried in stock by Beckwith Electric.

Parts not marked with an asterisk are normally available from an electronics components house. Those parts or a current substitute will normally be available from Beckwith Electric stock.

In either case, when parts are ordered from Beckwith Electric, we will be responsible for supplying the current replacement in the shortest possible time.

Sufficient detailed description is also given to permit purchasing from an electronics parts house, providing the part is of equal or better quality to insure reliable operation. This may require some interpretation of specifications which may be avoided by direct purchase from Beckwith Electric using the **BECO NUMBER**.

Note that in a few instances, components are selected in final test. Procedures described in the **TEST PROCEDURES** section must be followed in replacing these components.

All resistors are 1/2 W unless noted.

COMPONENT DESIGNATION	BECO NUMBER	DESCRIPTION
PARTS MOUNTED TO THE ENCLOSURE		
Counter for Model M-0271, M-0278 or M-0338:		
	430-00329	Counter, Operations, X2, Redington R23-4416-115AC
Counter for Other Models:		
	430-00333	Counter, Operations, X1, Redington R22-4416-115AC
F1	420-00854	Fuse, 4.0 A, 250 V, 3 AG
F2	420-00858	Fuse, 0.25 A, 250 V, 8 AG
J1,J3	420-00211	Binding Post, Red, H.H. Smith #386
J2,J4	420-00212	Binding Post, Black, H.H. Smith #3

COMPONENT DESIGNATION	BECO NUMBER	DESCRIPTION
MAIN PRINTED CIRCUIT BOARD, B-0338		
	450-00116	Printed Circuit Board, P-0815
C1,C2	020-00100	Capacitor, Polyester, 4.7 µF ±5%, 63 V
C3,C17-C19,C22,C23	000-00917	Capacitor, Ceramic Disc, 0.01 µF ±20%
C4,C8,C12	000-00018	Capacitor, Electrolytic, 1.5 µF ±20%, 50 V
C5,C6	000-00019	Capacitor, Electrolytic, 0.22 µF ±20%, 50 V
C7,C13	000-00555	Capacitor, Tantalum, 4.7 µF ±10%, 25 V
C9	010-00551	Capacitor, Polyester, 0.068 µF ±10%, 100 V
C10	010-00435	Capacitor, Polycarbonate, 0.027 µF ±5%, 250V
C11	000-00808	Capacitor, Polyester, 0.01 µF ±10%, 400 V
C14	000-00909	Capacitor, Ceramic Disc, 0.1 µF +80/-20%, 25 V
C15	000-00545	Capacitor, Tantalum, 2.7 µF ±10%, 400 V
C16	010-00548	Capacitor, Polyester, 0.0068 µF ±10%, 400 V
C20	000-00651	Capacitor, Electrolytic, 470 µF, 63 V
C21	000-00648	Capacitor, Electrolytic, 1000 µF, 50 V
C24	000-00849	Capacitor, Polyester, 1.5 µF ±10%, 63 V
C25-C28	000-00848	Capacitor, Polyester, 3.3 µF ±10%, 63 V
C29,C32	000-00905	Capacitor, Ceramic Disc, 0.05 µF +80/-20%, 600 V
C30		See **PARALLELING OPTION**
C31	000-00927	Capacitor, Ceramic Disc, 0.01 µF ±20%, 1 KV
C33	000-00914	Capacitor, Ceramic Disc, 0.1 µF ±20%, 50 V
C34-C40	000-00939	Capacitor, Ceramic Disc, 0.0047 µF ±20%, 3000 V
C41	000-00945	Capacitor, Ceramic Disc, 0.01 µF ±20%, 3000 V
D1,D2	400-00240	Diode Array, 8-Isolated, Motorola MMAD1108
D3,D12-D18	400-00224	Diode, 1N4148
D4-D7	400-00722	LED, Hewlett-Packard HP5082-4658
D8,D9	400-00061	Diode, Zener, 36 V ±5%, 5 W, 1N5365B
D10	400-00211	Diode, 1N5061
D11	400-00241	Diode, Bridge Rectifier, 3N256
F1, F2		See **PARTS MOUNTED TO THE ENCLOSURE**

COMPONENT DESIGNATION	BECO NUMBER	DESCRIPTION
F3	420-00719	Microfuse, 1A, 125 V, Littelfuse 273001
F4	420-00726	Microfuse, 3A, 125 V, Littelfuse 273003
J1-J4		See **PARTS MOUNTED TO THE ENCLOSURE**
J5,J6,J8,J9,J11,J13-J21	370-00020	Resistor, 0 Ω, Dale FRJ-55 (Jumper)
J7,J10,J12		Not Used
K1,K2	430-00153	Relay, 4PDT, 24 V dc, American Zettler AZ6-4CH-24D
K3,K4		See **REVERSE POWER FLOW OPTION**
K5,K6		See **MULTI-STEP VOLTAGE REDUCTION OPTION**
K7	430-00152	Relay, SPDT, 120 V ac, American Zettler AZ4UP-E-1C-120A
P1-P6	440-00176	Printed Circuit Tab, Voltrex 16N1003
P7	030-00079	Header, 0.250 Grid, 8-Pin, AMP 641828-1
P8-P11	030-00064	Header, 0.100 Grid, 10 Ckts., Molex #10-89-1101
Q1,Q2	400-00300	Transistor, 2N1711
R1,R24	360-00144	Potentiometer, 2 K ±10%, Allen Bradley 73A1N116P202U
R2,R26,R38	200-00104	Resistor, Carbon Film, 100 K ±5%
R3,R8	200-00103	Resistor, Carbon Film, 10 K ±5%
R4	200-00154	Resistor, Carbon Film, 150 K ±5%
R5-R7,R15-R18,R20	390-00573	Resistor, Metal Film, 56.2 K ±1%, 1/8 W, RN55C
R9	200-00393	Resistor, Carbon Film, 39 K ±5%
R10,R12-14	200-00105	Resistor, Carbon Film, 1 M ±5%
R11	200-00434	Resistor, Carbon Film, 430 K ±5%
R19	340-00701	Resistor, Metal Film, 1M ±1%, 1/4 W, RN60C
R21	390-00420	Resistor, Metal Film, 1.58 K ±1%, 1/8 W, RN55C
R22,R28,R54	200-00472	Resistor, Carbon Film, 4.7 K ±5%
R23,R41	200-00203	Resistor, Carbon Film, 20 K ±5%
R25	340-00630	Resistor, Metal Film, 200 K ±1%, 1/4 W, RN60C
R27	200-00204	Resistor, Carbon Film, 200 K ±5%
R29	200-00683	Resistor, Carbon Film, 68 K ±5%
R30,R63	330-00310	Resistor, Metal Film, 124 Ω ±1%, 1/4 W
R31	180-00101	Resistor, Carbon Film, 100 Ω ±5%, 1/4 W

COMPONENT DESIGNATION	BECO NUMBER	DESCRIPTION
R32,R33,R35,R36	200-00332	Resistor, Carbon Film, 3.3 K ±5%
R34	390-00540	Resistor, Metal Film, 25.5 K ±1%, 1/8 W, RN55C
R37	390-00556	Resistor, Metal Film, 37.4 K ±1%, 1/8 W, RN55C
R39	200-00754	Resistor, Carbon Film, 750 K ±5%
R40,R48,R51	200-00475	Resistor, Carbon Film, 4.7 M ±5%
R42	360-00145	Potentiometer, 50 K ±10%, Allen Bradley 73B1N116P503W
R43	390-00799	Resistor, Metal Film, 10 M ±1%, 1/8 W, RN55C
R44,R85	200-00101	Resistor, Carbon Film, 100 Ω ±5%
R45	360-00143	Potentiometer, 2 K ±5%, Allen Bradley 73B1N116P202X
R46,R49	390-00487	Resistor, Metal Film, 7.87 K ±1%, 1/8 W, RN55C
R47,R69	330-00601	Resistor, Metal Film, 100 K ±1%, 1/4 W, RN60E
R50	330-00576	Resistor, Metal Film, 60.4 K ±1%, 1/4 W, RN60E
R52	390-00539	Resistor, Metal Film, 24.9 K ±1%, 1/8 W, RN55C
R53	330-00550	Resistor, Metal Film, 32.4 K ±1%, 1/4 W, RN60E
R55	200-00392	Resistor, Carbon Film, 3.9 K ±5%
R56	390-00310	Resistor, Metal Film, 124 Ω ±1%, 1/8 W, RN55C
R57	390-00636	Resistor, Metal Film, 232 K ±1%, 1/8 W, RN55C
R58	360-00146	Potentiometer, 500 Ω ±5%, Allen Bradley 73B1N116P501X
R59	390-00429	Resistor, Metal Film, 1.96 K ±1%, 1/8 W, RN55C
R60	390-00473	Resistor, Metal Film, 5.62 K ±1%, 1/8 W, RN55C
R61,R62	330-00414	Resistor, Metal Film, 1.37 K ±1%, 1/4 W
R64	360-00032	Potentiometer, 10 K ±10%, Bourns 3386P-1-103
R65	360-00034	Potentiometer, 200 Ω ±10%, Bourns 3386P-1-201
R66	360-00094	Potentiometer, 1 K ±10%, Bourns 3386P-1-102
R67	390-00407	Resistor, Metal Film, 1.15 K ±1%, 1/8 W, RN55C
R68	390-00449	Resistor, Metal Film, 3.16 K ±1%, 1/8 W, RN55C
R70,R71	370-00008	Resistor, Carbon Comp., 3.3 Ω ±10%, 1 W
R72	230-00393	Resistor, Carbon Comp., 39 K ±5%, 1 W
R73,R76-R78		See **MULTI-STEP VOLTAGE REDUCTION OPTION**
R74	350-00032	Resistor, Wirewound, 750 Ω ±5%, 3-1/4 W, Ohmite 995-3A
R75, R81	200-00151	Resistor, Carbon Film, 150 Ω ±5%
R79	230-00473	Resistor, Carbon Comp, 47 K ±5%, 1 W

COMPONENT DESIGNATION	BECO NUMBER	DESCRIPTION
R80	360-00147	Potentiometer, 5 K ±10% w/Switch, Allen Bradley 73L1N116P502W
R82	230-00470	Resistor, Carbon Comp, 47 Ω ±5%, 1 W
R83,R84		See **PARALLELING OPTION**
R86	200-00100	Resistor, Carbon Film, 10 Ω ±5%
RV1-RV3,RV5-RV9, RV11	400-00724	Varistor, 250 V, Panasonic ERZ-C14DK391
RV4	400-00715	Varistor, 130 V, G.E. V130LA10A
RV10	400-00718	Varistor, 1000 V, Panasonic ERZ-C-14DK182
RV12	400-00713	Varistor, 40 V, G.E. V68ZA2
S1,S2,S6	430-00097	Switch, SPDT, Alcoswitch TT11DG-PC-1-ES
S3	431-00003	Rotary Switch, 5-Position, 1-1/4 Shaft, Ohmite 111-5
S4	430-00065	Switch, SPST, Momentary, C & K 8531SCQ
S5	430-00064	Switch, DPDT, Alcoswitch MTA-206N-WW
T1 for Model M-0271:		
T1	410-00110*	Transformer, Sense, U-0167
T1 for Other Models:		
T1	410-00022*	Transformer, Sense, U-0027
T2	410-00023*	Transformer, Current, U-0025
T3	410-00017*	Transformer, Power, U-0029
T4		See **PARALLELING OPTION**
TB1	420-00070	Terminal Block, 15-Position, Kulka 22597A-15
TB2	421-00032	Terminal Block, 8-Position, Kulka 2597A-8
TP1	420-00232	Test Point, Berg 65499-136
U1	400-00674	Dual Comparator, Dual Op Amp, Motorola MC14575CL
U2,U4	400-00665	Quad Op Amp, National LM224J
U3	400-00666	Triple Input AND-Gate, Motorola MC14073BCL
U5	400-00676	Rms/Dc Converter, Analog Devices AD536AKH
VR1	560-00017	Voltage Regulator, Motorola LM337H
VR2	400-00660	Voltage Regulator, Motorola LM317H
VR3	400-00667	Voltage Reference, 10 V, National LH0070-OH

COMPONENT DESIGNATION	BECO NUMBER	DESCRIPTION
MULTI-STEP VOLTAGE REDUCTION OPTION		
K5,K6	430-00152	Relay, SPDT, 120 V ac, American Zettler AZ4UP-E-1C-120 A
R73	330-00572	Resistor, Metal Film, 54.9 K ±1%, 1/4 W
R76	390-00631	Resistor, Metal Film, 205 K ±1%, 1/8 W
R77	360-00110	Potentiometer, 20 K ±10%, Beckman 93PR20K
R78	390-00594	Resistor, Metal Film, 93 K ±1%, 1/8 W, RN55C
PARALLELING OPTION		
C30	000-00848	Capacitor, Polyester, 3.3 µF ±10%, 63 V
R83	390-00550	Resistor, Metal Film, 32.4 K ±1%, 1/8 W, RN55C
R84	360-00106	Potentiometer, 100 K ±10%, Beckman 93PR100K
T4	410-00023*	Transformer, Current, U-0025
REVERSE POWER FLOW OPTION APPLICABLE TO M-0271, M-0293 AND M-0355 ONLY		
K3	431-10000	Relay, 4PDT, 24 V dc, American Zettler AZ421-V05-1H
K4	430-00143	Relay, DPDT, 24 V dc, American Zettler AZ420-V50-40L
240 V MOTOR/CONTROL POWER OPTION		
RV2,RV3,RV7	400-00733	Varistor, 460 V, 20 J (ac), Panasonic ERZ-C10DK751

COMPONENT DESIGNATION	BECO NUMBER	DESCRIPTION
50 HZ OPERATING FREQUENCY OPTION		
R25	340-00637	Resistor, Metal Film, 237 K ±1%, 1/4 W, RN60C2373F
Rev A		

This page intentionally left blank.

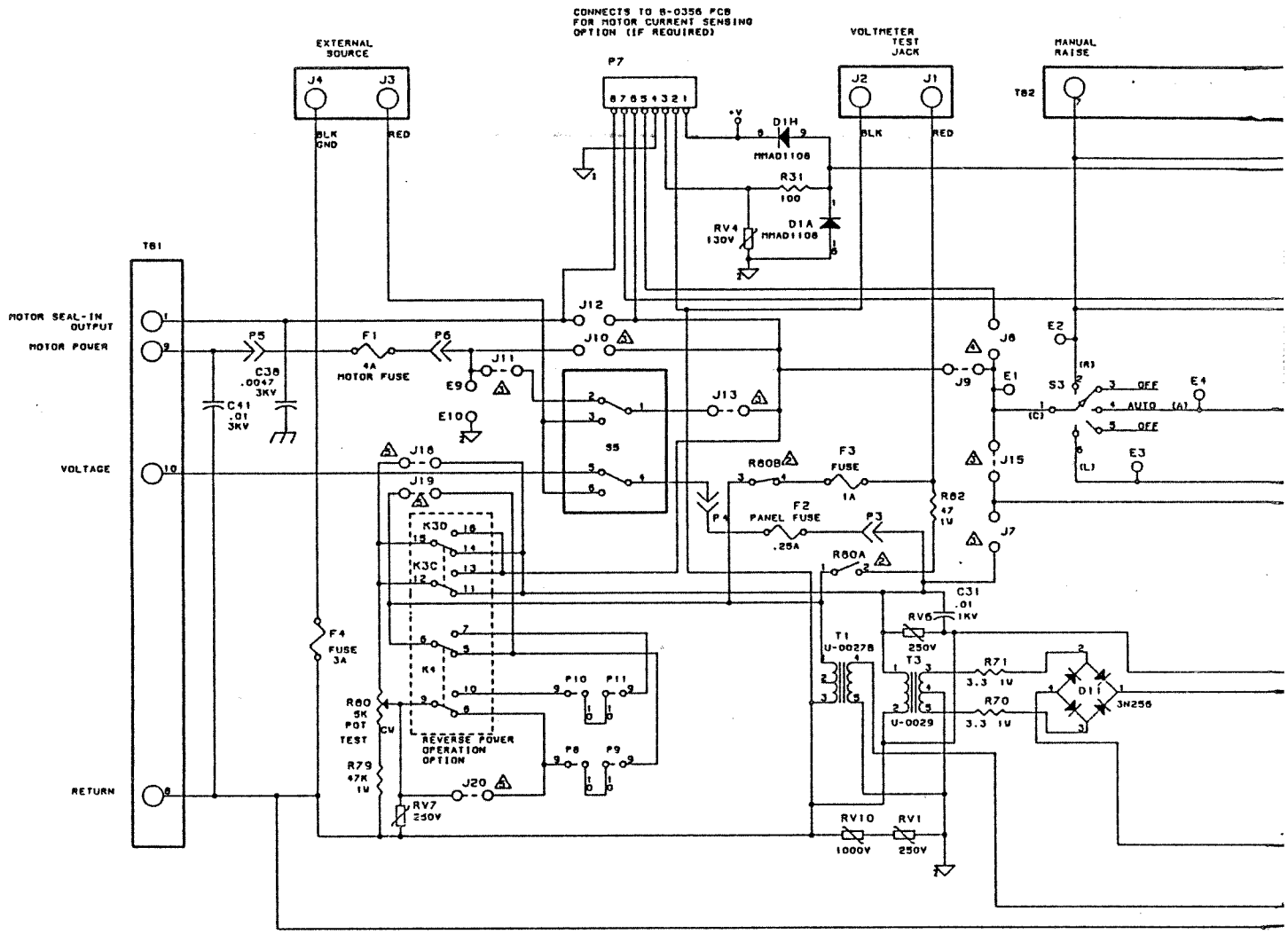

LEGEND

- TEST CONNECTOR
- TERMINAL BLOCK
- PANEL CONNECTION
- ANALOG GROUND
- LOGIC GROUND
- CHASSIS GROUND
- E — PAD FOR SOLDERING JUMPER WIRES TO
- P 12345678 — 8 PIN HEADER

NOTES

1. UNLESS OTHERWISE SPECIFIED:
   CAPACITORS ARE IN MICROFARADS
   CAPACITORS ARE 50V MIN.
   RESISTORS ARE IN OHMS
   RESISTORS ARE 1/4W
2. R80 SHOWN IN OPERATING POSITION.
3. IF 240V MOTOR/CONTROL POWER OPTION IS USED:
   CHANGE RV2, RV3 & RV7 TO 460V, 20J.
   INSTALL JUMPERS J7 AND J10.
   DO NOT INSTALL J11, J13 OR J15.
4. IF MOTOR CURRENT SENSING ASSEMBLY, B-0356, IS USED:
   INSTALL J8, REMOVE J9.
5. IF REVERSE POWER OPERATION OPTION IS USED:
   REMOVE J5, J6, J18, J19 AND J20.
   (NOTE: REVERSE POWER IS ONLY AVAILABLE WITH 120VAC MOTOR POWER)
6. TWO DIGIT PIN NUMBERS ON VERTICAL COMPONENTS ARE DRAWN WITH ONE DIGIT OVER THE OTHER.

FIGURE 7a Main Board B-0338 Schematic

REVISIONS			
REV	DESCRIPTION	DATE	APPROVED
A	RELEASE PER ECO# 0652	4/2/90	KG/JH6-90
B	REVISED PER ECO# 0683	7/5/90	KG/JH1-91
C	REVISED PER ECO# 0787	9/19/91	KG/JH9-91
D	REVISED PER ECO 0851	1/28/92	HB/JH1-92
E	REVISED PER ECO#0821	6/5/92	KG/[illegible]

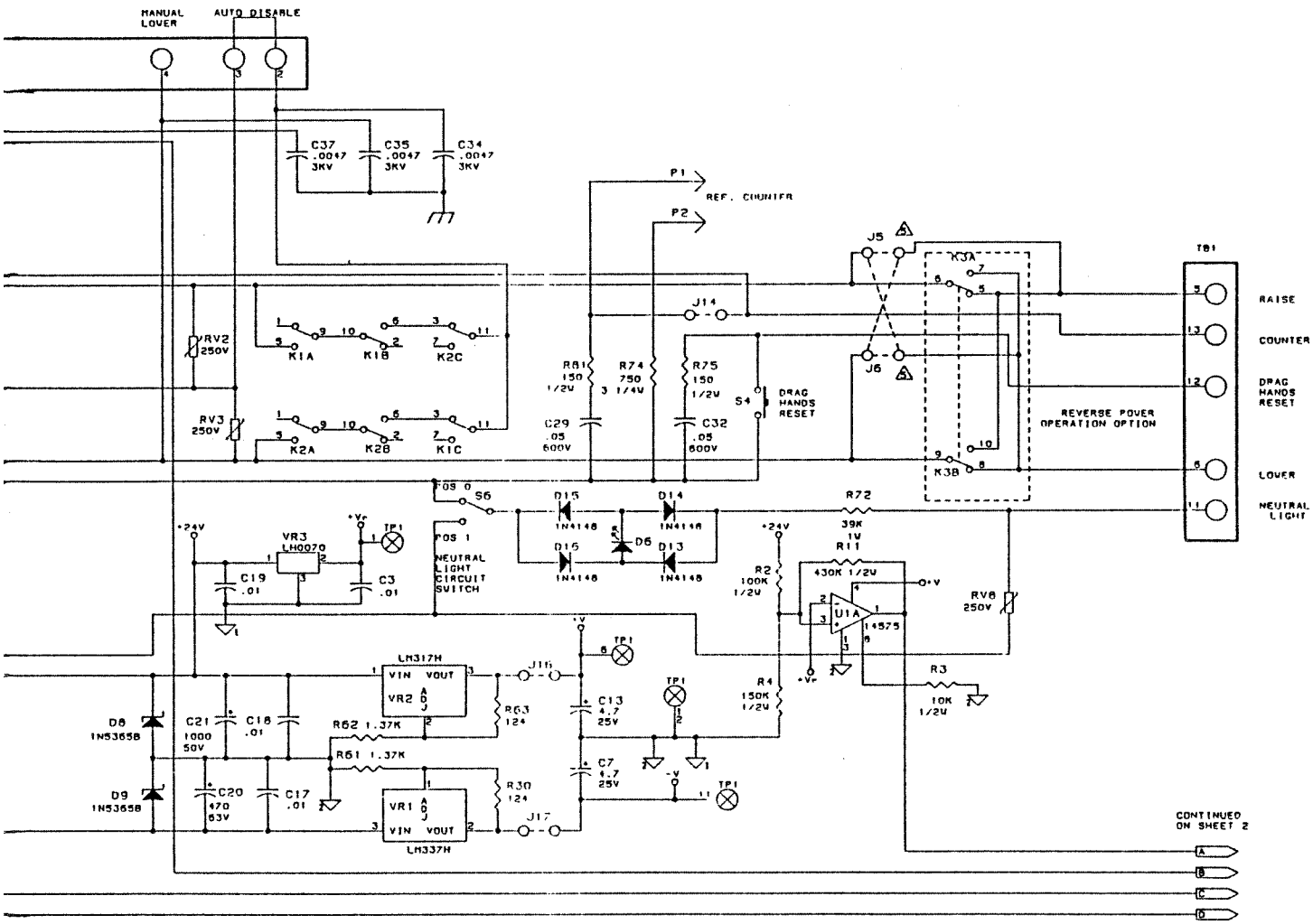

TEST POINTS

TP1-1	+10V REFERENCE
TP1-2	RAISE (ON = 12.5VDC)
TP1-3	LOC CONTROL (2.8V RMS @ 100mA)
TP1-4	LOWER (ON = 12.5VDC)
TP1-5	SUPPLIES OK (OK = 15VDC)
TP1-6	+15VDC SUPPLY
TP1-7	RMS/DC CONVERSION (5.00VDC = CENTER OF BAND)
TP1-8	NOT USED
TP1-9	7.2V RMS @ 120V INPUT
TP1-10	SENSING VOLTAGE. 1/10 VIN (CORRECTED SCALE)
TP1-11	-15VDC SUPPLY
TP1-12	CIRCUIT GROUND

REFER TO SHEET 3 FOR M-0271A.

BECKWITH ELECTRIC CO. INC.

TITLE SCHEMATIC-TAPCHANGER CONTROL

DWN	CHK	APP	DATE	SCALE	SIZE	DRAWING NUMBER	SHT	REV
KLO	GG	JH	8/14/89	NONE	D	Y-0338	1/3	E

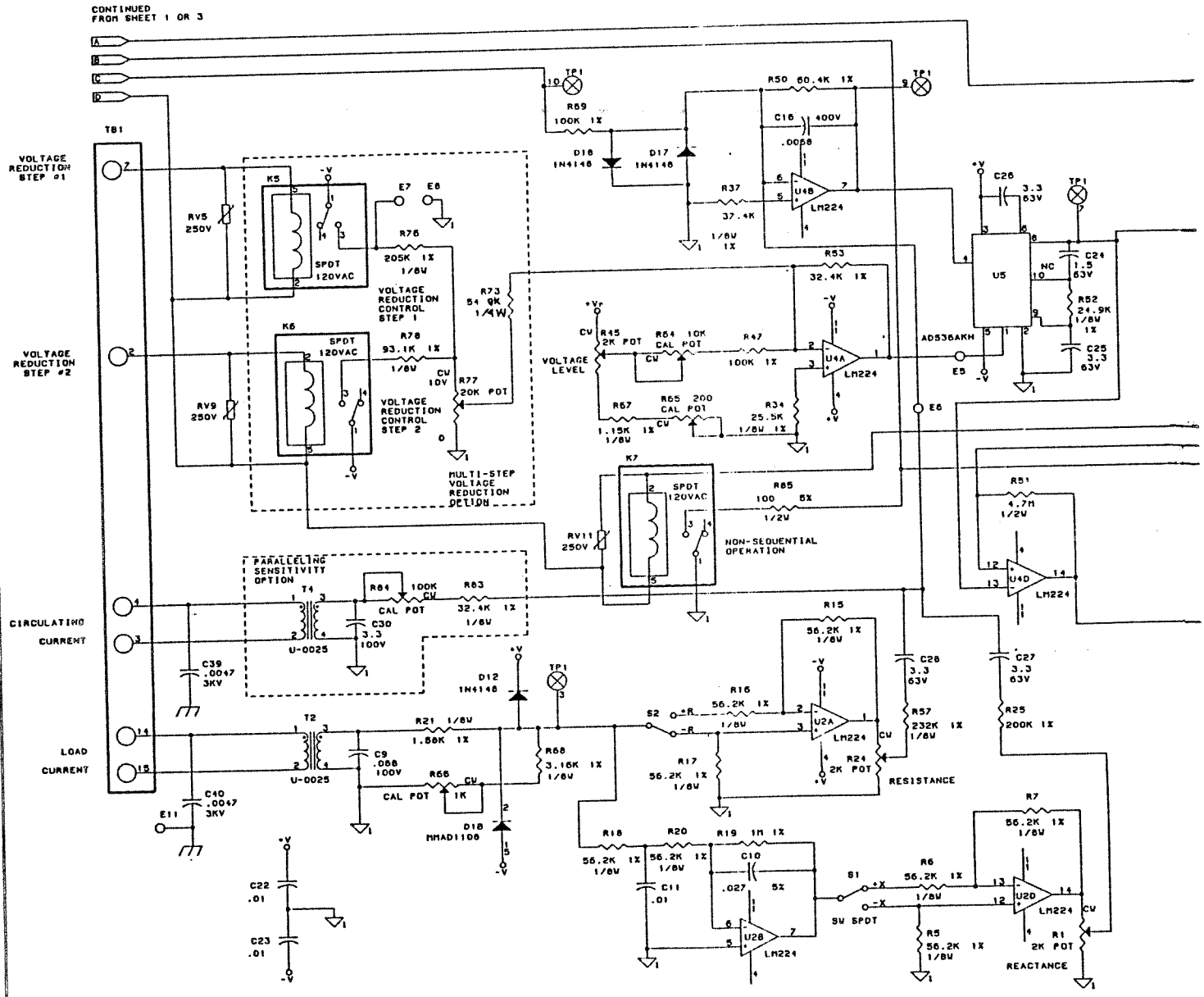

FIGURE 7b Main Board B-0338 Schematic

REVISIONS

REV	DESCRIPTION	DATE	APPROVED
A	RELEASE PER ECO# 0652	4/2/90	KQ/JH6-90
B	REVISED PER ECO# 0683	7/6/90	KQ/JH1-91
C	REVISED PER ECO# 0787	9/19/91	KQ/JH9-91
D	REVISED PER ECO 0851	1/28/92	MB/TB1-92
E	REVISED PER ECO#0921	5/5/92	KQ/TB
F	REVISED PER ECO#0970	11/18/92	MB/

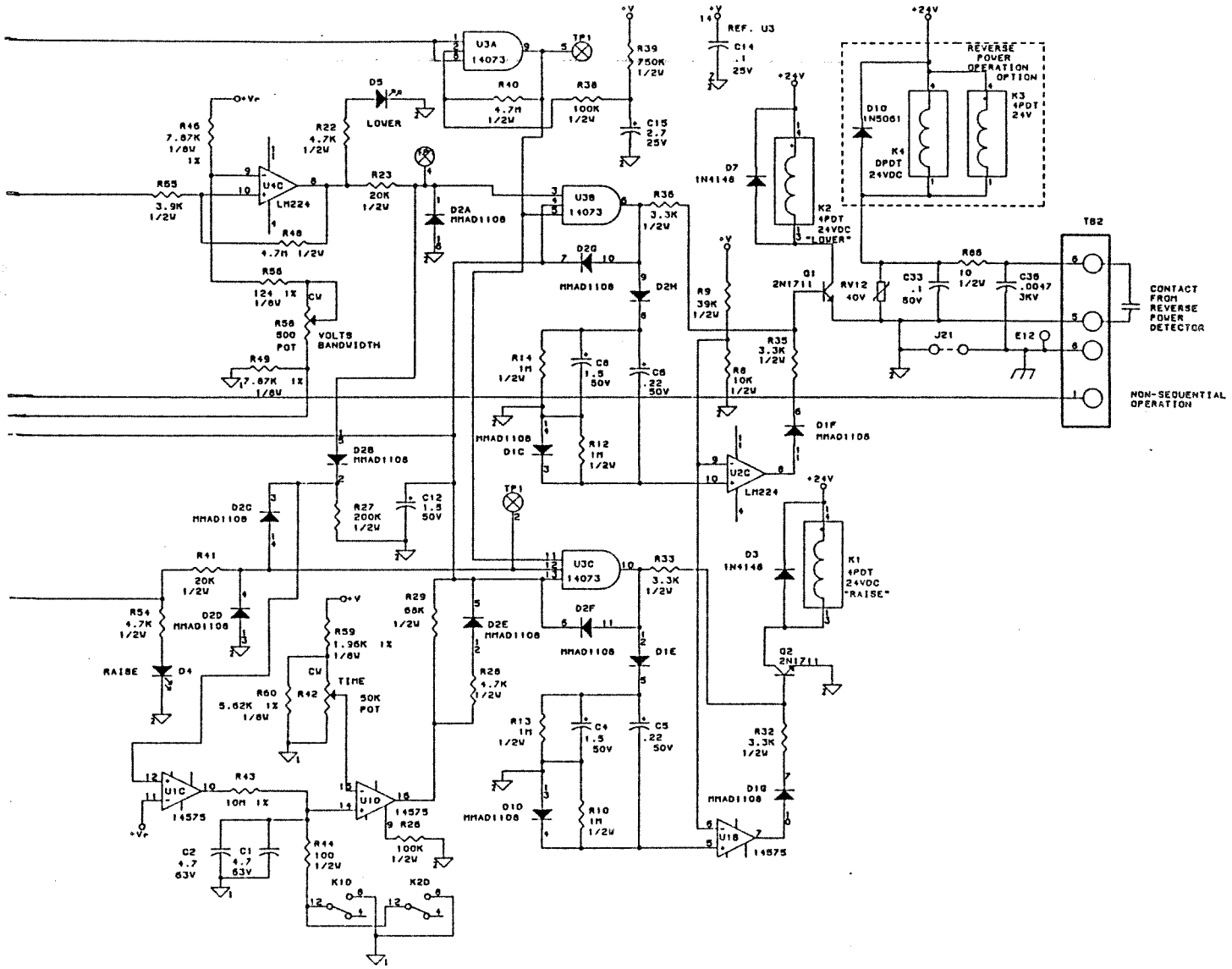

BECKWITH ELECTRIC CO. INC.

TITLE: SCHEMATIC-TAPCHANGER CONTROL

DWN	CHK	APP	DATE	SCALE	SIZE	DRAWING NUMBER	SHT	REV
KLQ	GG	JH	8/14/89	NONE	D	Y-0338	2/3	F

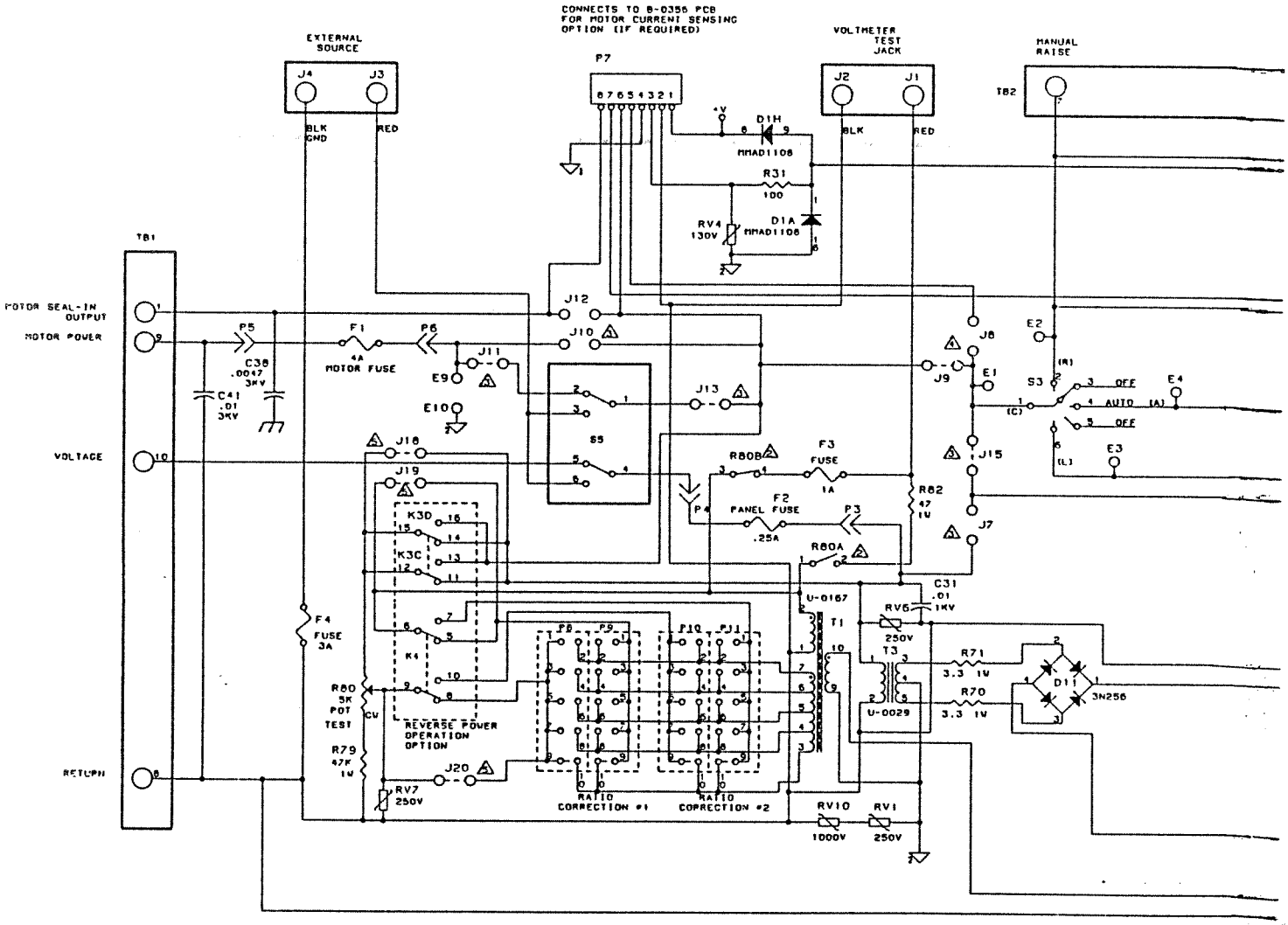

LEGEND

- TEST CONNECTOR
- TERMINAL BLOCK
- PANEL CONNECTION
- ANALOG GROUND
- LOGIC GROUND
- CHASSIS GROUND
- E — PAD FOR SOLDERING JUMPER WIRES TO
- P — 12345678 — 8 PIN HEADER

NOTES

1. UNLESS OTHERWISE SPECIFIED:
   CAPACITORS ARE IN MICROFARADS
   CAPACITORS ARE 50V MIN.
   RESISTORS ARE IN OHMS
   RESISTORS ARE 1/4W
2. R80 SHOWN IN OPERATING POSITION.
3. IF 240V MOTOR/CONTROL POWER OPTION IS USED:
   CHANGE RV2, RV3 & RV7 TO 460V, 20J.
   INSTALL JUMPERS J7 AND J10.
   DO NOT INSTALL J11, J13 OR J15.
4. IF MOTOR CURRENT SENSING ASSEMBLY, B-0356, IS USED:
   INSTALL J8, REMOVE J9.
5. IF REVERSE POWER OPERATION OPTION IS USED:
   REMOVE J5, J6, J18, J19 AND J20.
   (NOTE: REVERSE POWER IS ONLY AVAILABLE WITH 120VAC MOTOR POWER)
6. TWO DIGIT PIN NUMBERS ON VERTICAL COMPONENTS ARE DRAWN WITH ONE DIGIT OVER THE OTHER.

FIGURE 7c Main Board B-0338 Schematic for M-0271 only

REVISIONS			
REV	DESCRIPTION	DATE	APPROVED
D	REVISED PER ECO 0851	4/29/92	HB/TB 4-92
E	REVISED PER ECO#0821	6/5/92	KO [illegible]

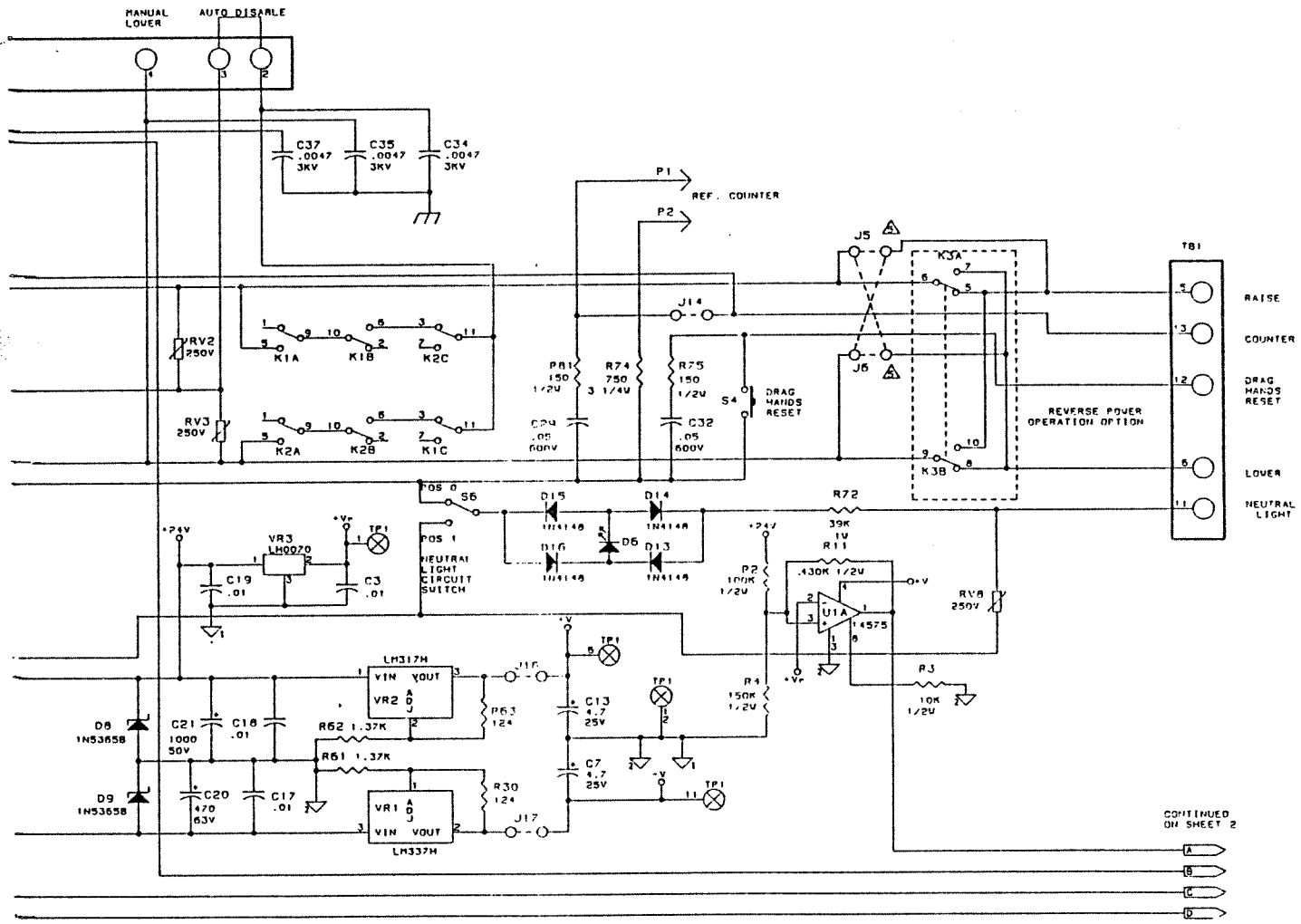

TEST POINTS

TP1-1	+10V REFERENCE
TP1-2	RAISE (ON = 12.5VDC)
TP1-3	LOC CONTROL (2.8V RMS @ 100mA)
TP1-4	LOWER (ON = 12.5VDC)
TP1-5	SUPPLIES OK (OK = 15VDC)
TP1-6	+15VDC SUPPLY
TP1-7	RMS/DC CONVERSION (5.00VDC = CENTER OF BAND)
TP1-8	NOT USED
TP1-9	7.2V RMS @ 120V INPUT
TP1-10	SENSING VOLTAGE. 1/10 Vin (CORRECTED SCALE)
TP1-11	-15VDC SUPPLY
TP1-12	CIRCUIT GROUND

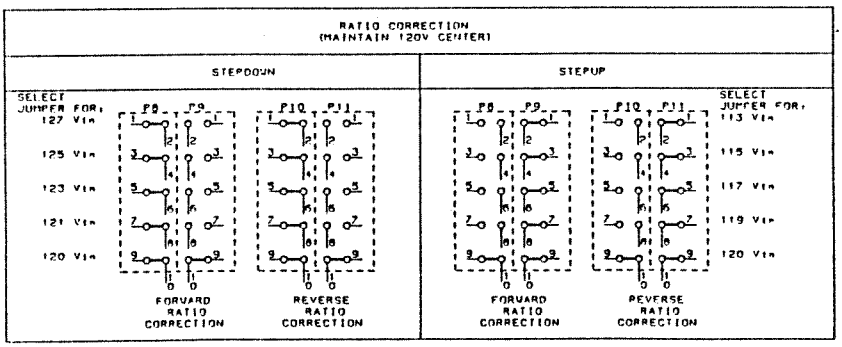

THIS SHEET FOR M-0271A ONLY.

BECKWITH ELECTRIC CO. INC.

TITLE SCHEMATIC-TAPCHANGER CONTROL

DWN	CHK	APP	DATE	SCALE	SIZE	DRAWING NUMBER	SHT	REV
KLO	GG	JH	8/14/89	NONE	D	Y-0338	1/3	E

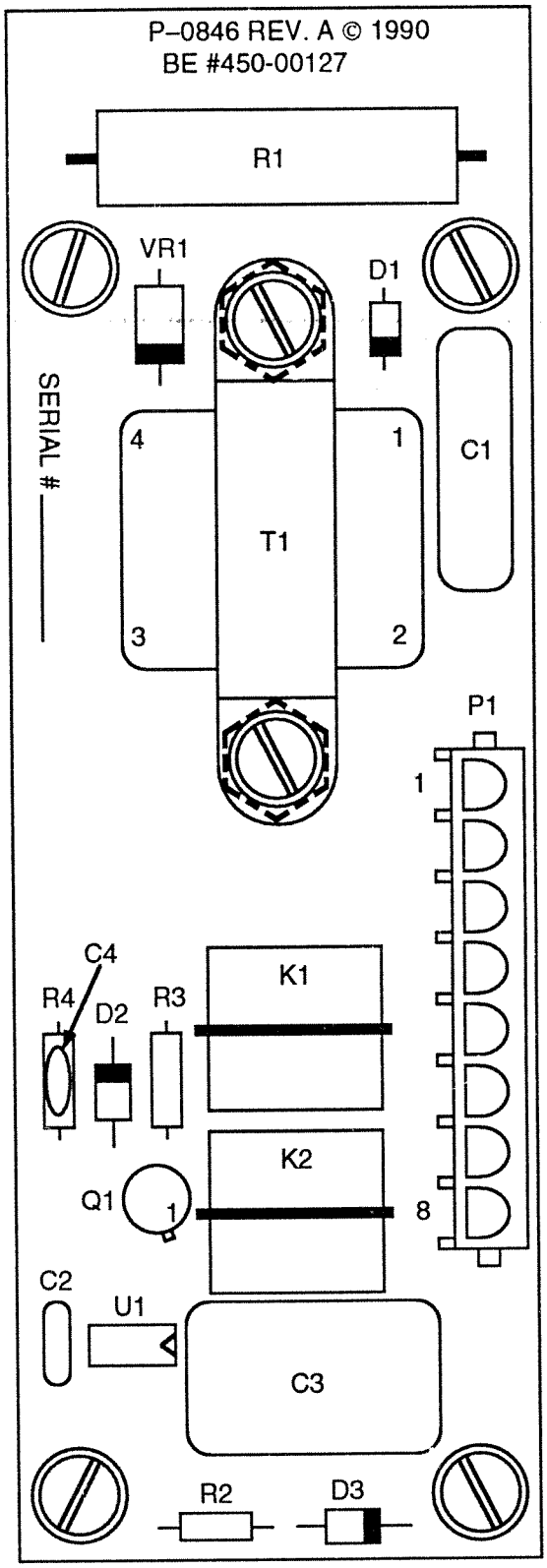

■ **NOTE:** If Motor Current Sensing Option is used, install jumper J8 and remove jumper J9.

FIGURE 8 Motor Current Sensing Board B-0356 Component Location

COMPONENT DESIGNATION	BECO NUMBER	DESCRIPTION
MOTOR CURRENT SENSING BOARD, B-0356 APPLICABLE TO M-0324, M-0345 AND M-0355 ONLY		
C1	000-00822	Capacitor, Polyester, 3.3 µF ±10%, 100 V
C2	000-00917	Capacitor, Ceramic Disc, 0.01 µF ±20%, 50 V
C3	000-00847	Capacitor, Polyester, 10 µF ±10%, 63 V
C4	000-00940	Capacitor, Ceramic, 2.2 µF ±20%, 50 V
D1	400-00211	Diode, 1N5061
D2	400-00224	Diode, 1N4148
D3	400-00225	Diode, FD333
K1,K2	430-00184	Relay, 12 V dc, DPDT, Form-C, American Zettler AZ420-V70-4H
P1	030-00079	Header, 8-Pin, AMP 641828-1
Q1	400-00300	Transistor, 2N1711
R1 for Model M-0324 or M-0345:		
R1	350-00081	Resistor, Wirewound, 5 Ω ±5%, 11 W, Ohmite 90J5R0
R1 for Model M-0355:		
R1	350-00082	Resistor, Wirewound, 3 Ω ±5%, 11 W, Ohmite 90J3R0
R2	390-00626	Resistor, Metal Film, 182 K ±1%, 1/8 W
R3,R4	200-00203	Resistor, Carbon Film, 20 K ±5%
T1	410-00098*	Transformer, Step-Down, U-0154
U1	400-00698	Timer, LM555CN
VR1	400-00086	Diode, Zener, 68 V ±5%, 5 W, 1N5373B

Rev A

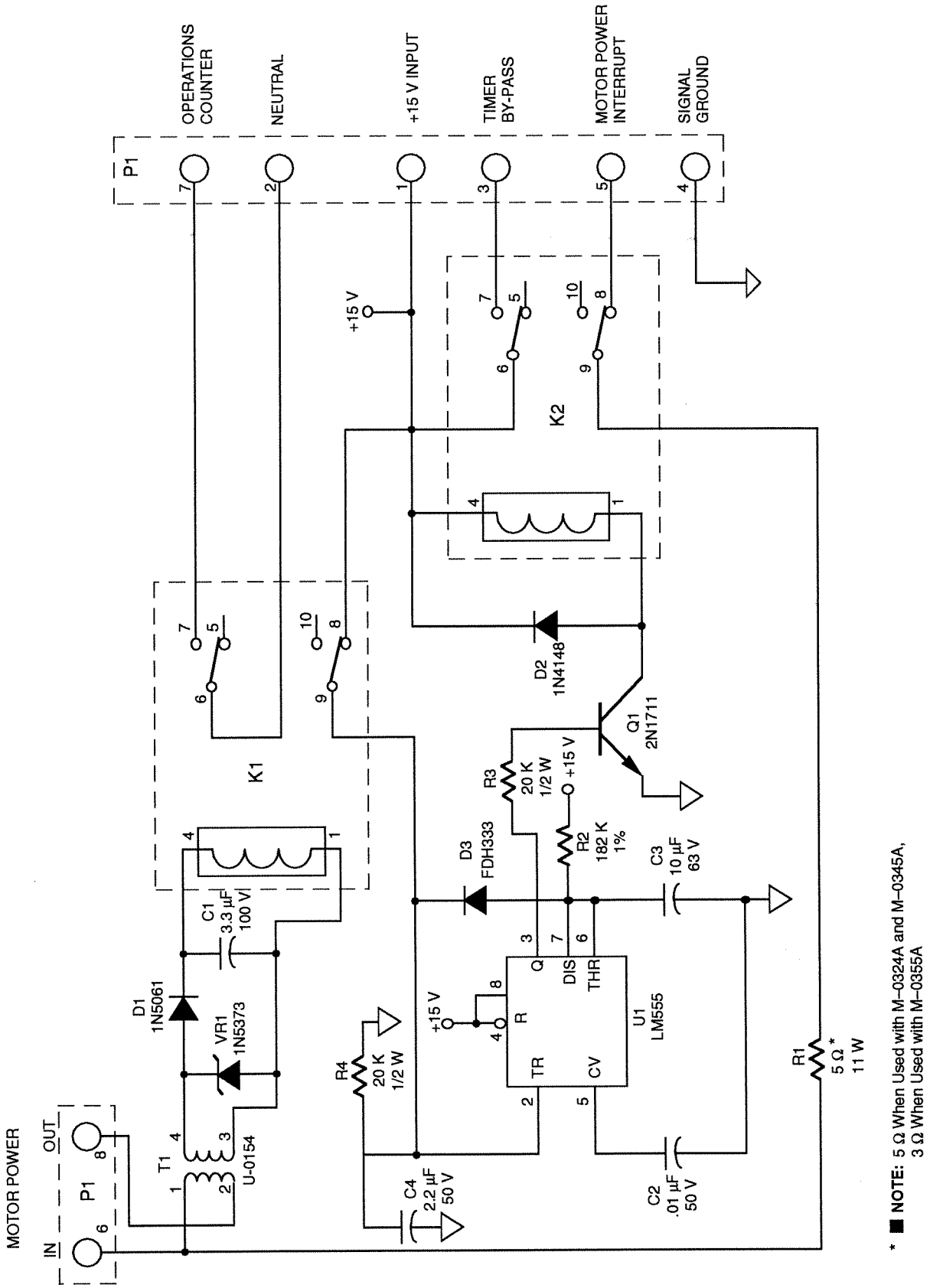

FIGURE 9 Motor Current Sensing Board B-0356 Schematic

Legal Information

Patent

The units described in this manual are covered by U.S. Patents 3,721,894 and 4,323,838; and Canadian Patent 985,368.

Buyer shall hold harmless and indemnify the Seller, its directors, officers, agents, and employees from any and all costs and expense, damage or loss, resulting from any alleged infringementof United States Letters Patent or rights accruing thereform or trademarks, whether federal, state, or common law, arising from the Seller's compliance with Buyer's designs, specifications, or instructions.

Warranty

Seller hereby warrants that the goods which are the subject matter of this contract will be manufactured in a good workmanlike manner and all materials used herein will be new and reasonably suitable for the equipment. Seller warrants that if, during a period of two years from date of shipment of the equipment, the equipment rendered shall be found by the Buyer to be faulty or shall fail to peform in accordance with Seller's specifications of the product, Seller shall at his expense correct the same, provided, however, that Buyers shall ship the equipment prepaid to Seller's facility. The Seller's responsibility hereunder shall be limited to replacement value of the equipment furnished under this contract.

Seller makes no warranties expressed or implied other than those set out above. Seller specifically excludes the implied warranties of merchantibility and fitness for a particular purpose. There are no warranties which extend beyond the description contained herein. In no event shall Seller be liable for consequential, exemplary, or punitive damages of whatever nature.

Any equipment returned for repair must be sent with transportation charges prepaid. The equipment must remain the property of the Buyer. The aforementioned warranties are void if the value of the unit is invoiced to the Seller at the time of return.

Indemnification

The Seller shall not be liable for any property damages whatsoever or for any loss or damage arising out of, connected with, or resulting from this contract, or from the performance or breach thereof, or from all services covered by or furnished under this contract.

In no event shall the Seller be liable for special, incidental, exemplary, or consequential damages, including but not limited to, loss of profits or revenue, loss of use of the equipment or any associated equipment, cost of capital, cost of purchased power, cost of substitute equipment, facilities or services, downtime costs, or claims or damages of customers or employees of the Buyer for such damages, regardless of whether said claim or damages is based on contract, warranty, tort including negligence, or otherwise.

Under no circumstances shall the Seller be liable for any personal injury whatsoever.

It is agreed that when the equipment furnished hereunder are to be used or performed in connection with any nuclear installation, facility, or activity, Seller shall have no liability for any nuclear damage, personal injury, property damage, or nuclear contamination to any property located at or near the site of the nuclear facility. Buyer agrees to indemnify and hold harmless the Seller against any and all liability associated therewith whatsoever whether based on contract, tort, or otherwise. Nuclear installation or facility means any nuclear reactor and includes the site on which any of the foregoing is located, all operations conducted on such site, and all premises used for such operations.

Notice:

Any illustrations and descriptions by Beckwith Electric Co., Inc. are for the sole purpose of identification.

The drawings and/or specifications enclosed herein are the proprietary property of Beckwith Electric Co., Inc., and are issued in strict confidence; therefore, shall not be used as a basis of reproduction of the apparatus described therein without written permission of Beckwith Electric Co., Inc.

No illustration or description contained herein shall be construed as an express warranty of affirmation, promise, description, or sample, and any and all such express warranties are specifically excluded nor shall such illustration or description imply a warranty that the product is merchantable or fit for a particular purpose. There shall be no warranties which extend beyond those contained in the Beckwith Electric Co., Inc. terms of sale.

This Page Left Intentionally Blank

ISO 9001:1994
Registered

BECKWITH ELECTRIC CO., INC.

6190 - 118th Avenue North • Largo, Florida 33773-3724 U.S.A.
PHONE (727) 544-2326 • FAX (727) 546-0121
E-MAIL marketing@beckwithelectric.com
WEB PAGE www.beckwithelectric.com

Printed in USA

800-0355A-IB