SEL-701-1

Monitor
Instruction Manual

Schweitzer Engineering Laboratories, Inc.
2350 NE Hopkins Court
Pullman, WA USA 99163-5603
Tel: (509) 332-1890 FAX: (509) 332-7990

DANGER: Contact with instrument terminals may cause electrical shock which can result in injury or death.

DANGER: Contact with this circuitry may cause electrical shock that can result in injury or death.

WARNING: Overtightening the mounting nuts may permanently damage the monitor chassis.

WARNING: Be sure to carefully align the front panel with the monitor chassis during reassembly. If the front panel is not well aligned with the chassis, you may bend connector pins, causing the monitor to fail.

WARNING: This device is shipped with default passwords. Default passwords should be changed to private passwords at installation. Failure to change each default password to a private password may allow unauthorized access. SEL shall not be responsible for any damage resulting from unauthorized access.

CAUTION: Do not connect external voltages to the monitor contact inputs. Because the contact inputs are internally wetted, permanent damage to the monitor or external equipment may result from connecting external voltage to a monitor contact input.

CAUTION: The monitor contains devices sensitive to Electrostatic Discharge (ESD). When working on the monitor with the front panel removed, work surfaces and personnel must be properly grounded or equipment damage may result.

CAUTION: Removal of enclosure panels exposes circuitry which may cause electrical shock which can result in injury or death.

DANGER: Tout contact avec les bornes de raccordement de l'appareil peut causer un choc électrique pouvant entraîner des blessures ou la mort.

DANGER: Tout contact avec ce circuit peut être la cause d'un choc électrique pouvant entraîner des blessuers ou la mort.

ATTENTION: Une pression excessive sur les écroux de montage peut endommager de façon permanente le chassis l'appareil de surveillance.

ATTENTION: Assurez-vous d'aligner soigneusement le panneau frontal avec le châssis l'appareil de surveillance en cours de remontage. Si le panneau n'était pas bien aligné avec le châssis, vous pourriez plier les broches du connecteur, entraînant une pannel'appareil de surveillance du relais.

ATTENTION: Assurez-vous d'aligner soigneusement le panneau frontal avec le châssis du relais en cours de remontage. Si le panneau du relais n'était pas bien aligné avec le châssis, vous pourriez plier les broches du connecteur, entraînant une panne du relais.

ATTENTION: Ne pas raccorder de tensions externes sur les bornes des entrées de contact de l'appareil de surveillance. Parce que les contacts sont trempés au mercure, des dommages permanents peuvent résulter pour l'appareil de surveillance ou l'équipement externe à la suite du raccordement d'une tension externe à une entrée de contact.

ATTENTION: L'appareil de surveillance contient des pièces sensibles aux décharges électrostatiques. Quand on travaille sur lui, avec les panneaux avant ou du dessus enlevés, toutes les surfaces et le personnel doivent être mis à la terre convenablement pour éviter les dommages à l'équipement.

ATTENTION: Le retrait des panneaux du boîtier expose le circuit qui peut causer des chocos électriques pouvant entraîner des blessures ou la mort.

The information in this manual is furnished for informational use only and is subject to change without notice. The English language manual is the only approved SEL manual.

This product is covered by U.S. Patent Nos: 5,436,784. Foreign Patents issued and other U.S. and Foreign Patents Pending.

This product is covered by the standard SEL 10-year warranty. For warranty details, visit www.selinc.com or contact your customer service representative.

Table of Contents

List of Tables v

List of Figures ix

List of Equations xiii

List of Examples xv

Manual Change Information xvii

Section 1: Introduction and Specifications

Introduction 1.1
Typographic Conventions 1.3
SEL-701-1 Monitor Models 1.4
SEL-701-1 Monitor Applications 1.5
SEL-701-1 Monitor Protection Features 1.6
SEL-701-1 Monitoring and Reporting Features 1.7
Monitor Part Number 1.8
SEL-701-1 Monitor Serial Number Label 1.10
Specifications 1.11

Section 2: Installation

Panel Cut & Drill Plans 2.1
Monitor Mounting 2.4
Monitor Rear-Panel Diagram 2.5
Example AC Wiring Diagrams 2.7
Monitor Connections 2.10
SEL-2600 RTD Module 2.24

Section 3: Settings Calculation

Introduction 3.1
Application Data 3.3
General Data 3.4
Basic Motor Protection 3.8
RTD-Based Protection 3.29
Voltage-Based Protection (Monitor Models 0701101X & 0701111X) 3.37
Output Configuration 3.43
Serial Port Settings 3.52
Sequential Events Recorder (SER) Settings 3.54

Section 4: Front-Panel Operation

Front-Panel Layout 4.1
Normal Front-Panel Display 4.2
Front-Panel Automatic Messages 4.3
Front-Panel Menus & Operations 4.4
Front-Panel Main Menu 4.8

Section 5: ASCII Serial Port Operation

Introduction 5.1
You Will Need… 5.2
Connect Your PC to the Monitor 5.3
Configure Your Terminal Emulation Software 5.5
Using Terminal Commands 5.6
Serial Port Access Levels 5.7
Command Summary 5.8
Command Explanations 5.10
Serial Port Automatic Messages 5.32

Section 6: Commissioning

Introduction 6.1
Monitor Commissioning Procedure 6.2
Selected Functional Tests 6.8

Section 7: Metering & Monitoring

Introduction 7.1
Power Measurement Conventions 7.6
Load Profiling 7.7
Motor Operating Statistics 7.8
Motor Start Report 7.11
Motor Start Trending 7.13

Section 8: Event Analysis

Introduction 8.1
Front-Panel Target LEDs 8.2
Front-Panel Messages 8.4
History Data & Event Summaries 8.5
Event Reports 8.7
Sequential Events Recorder (SER) Report 8.12
Example Event Report 8.15
Example Sequential Events Recorder (SER) Report 8.17

Section 9: Maintenance & Troubleshooting

Routine Maintenance Checks 9.1
Self-Testing 9.3
Troubleshooting Procedure 9.5
Power Supply Fuse Replacement 9.7
Real-Time Clock Battery Replacement 9.8
Firmware Upgrade Installation 9.9
Factory Assistance 9.12

Appendix A: Firmware Versions

Appendix B: SELOGIC® Control Equations and Monitor Logic

Introduction B.1
Monitor Functional Overview B.2
Relay Word Bits B.4
SELOGIC Control Equations B.12

Factory Default Logic Settings B.16
Factory Default LED Settings B.18
Front-Panel Display Message Configuration B.20
Nondedicated SELOGIC
Control Equation Variable Settings B.21
Latch Control Switch Settings B.22
Stop/Trip Logic B.24
Start and Emergency Restart Logic B.27
ACCESS2 SELOGIC Control Equation Setting B.29
TARR SELOGIC Control Equation Setting B.30
Speed Switch SELOGIC Control Equation Setting B.31
Event Triggering SELOGIC Control Equation B.32
Contact Output Control B.33
Remote Control Switches B.34
Selected Monitor Logic Diagrams B.36

Appendix C: Modbus® RTU Communications Protocol

Introduction C.1
Modbus RTU Communications Protocol C.2
01h Read Coil Status Command C.5
02h Read Input Status Command C.6
03h Read Holding Registers Command C.7
04h Read Input Registers Command C.8
05h Force Single Coil Command C.9
06h Preset Single Register Command C.10
07h Read Exception Status Command C.11
08h Loopback Diagnostic Command C.12
10h Preset Multiple Registers Command C.13
Controlling Output Contacts
and Remote Bits Using Modbus C.14
Reading the Monitor Status Using Modbus C.16
Reading Event Data Using Modbus C.17
Modbus Register Map C.18

Appendix D: SEL-2020/SEL-2030 Compatibility Features

Introduction D.1
Fast Binary Message Lists D.2
Fast Binary Message Definitions D.3
Compressed ASCII Commands D.18
CASCII Command D.19
CSTATUS Command D.22
CHISTORY Command D.23
CEVENT Command D.24
CME E Command D.26
CME M Command D.27
CME T Command D.28

Appendix E: Motor Thermal Element

Introduction E.1
Purpose of Motor Thermal Protection E.3
The Basic Thermal Element E.5
Motor Starting Protection E.8
Motor Running Protection E.9
Interpreting Percent Thermal Element Capacity Values E.12
Motor Starting Thermal Capacity E.13

Appendix F: SEL-701-1 Monitor Settings Sheets

Glossary GL.1

Index IN.1

List of Tables

Section 1: Introduction and Specifications

Table 1.1 Typographic Conventions 1.3
Table 1.2 SEL-701-1 Monitor Models 1.4
Table 1.3 SEL-701-1 Monitor Part Number Creation Table 1.8

Section 2: Installation

Table 2.1 Typical Maximum RTD Lead Length 2.19

Section 3: Settings Calculation

Table 3.1 Identifier Settings 3.4
Table 3.2 CT Configuration Settings 3.4
Table 3.3 Phase Rotation, Nominal Frequency Settings 3.5
Table 3.4 VT Configuration Settings 3.6
Table 3.5 Thermal Element Configuration Settings, Setting Method = RATING 3.9
Table 3.6 Thermal Element Configuration Settings, Setting Method = GENERIC 3.11
Table 3.7 Generic Thermal Limit Curve Tripping Times From Reset versus Multiples of Full Load Amps, Curves 1–10 (Thermal Limit Times in Seconds) 3.14
Table 3.8 Generic Thermal Limit Curve Tripping Times From Reset versus Multiples of Full Load Amps, Curves 15, 20, 25, 30, 35, 40, 45 (Thermal Limit Times in Seconds) 3.15
Table 3.9 Thermal Element Configuration Settings, Setting Method = USER 3.16
Table 3.10 3000 HP Motor Thermal Limit Times 3.19
Table 3.11 Thermal Capacity Alarm Setting 3.20
Table 3.12 Thermal Capacity to Start Settings 3.20
Table 3.13 Motor Cooling Time Settings 3.21
Table 3.14 Overcurrent Element Settings 3.22
Table 3.15 Jogging Block Element Settings 3.24
Table 3.16 Load-Jam Function Settings 3.24
Table 3.17 Load-Loss Element Settings, No Voltage Option 3.25
Table 3.18 Load-Loss Element Settings, With Voltage Option 3.26
Table 3.19 Current Unbalance Element Settings 3.26
Table 3.20 Phase Reversal Tripping Setting 3.27
Table 3.21 Speed Switch Tripping Time Delay Setting 3.28
Table 3.22 RTD Configuration Settings 3.29
Table 3.23 RTD Location Settings 3.30
Table 3.24 RTD Type Settings 3.31
Table 3.25 RTD Alarm and Trip Temperatures 3.32
Table 3.26 RTD Resistance versus Temperature 3.36
Table 3.27 Under- and Overvoltage Settings, Phase-to-Phase Potentials 3.37
Table 3.28 Under- and Overvoltage Settings, Phase-to-Neutral Potentials 3.38
Table 3.29 Reactive Power Element Settings 3.39

Table 3.30 Underpower Element Settings 3.40
Table 3.31 Power Factor Element Settings 3.41
Table 3.32 Frequency Element Settings 3.42
Table 3.33 Analog Output Settings 3.43
Table 3.34 Front-Panel Configuration Settings 3.44
Table 3.35 Display Message Settings 3.45
Table 3.36 LED Logic Settings 3.46
Table 3.37 Output Contact Fail-Safe and Trip Duration Settings 3.47
Table 3.38 Antibackspin Setting 3.48
Table 3.39 Factory Logic Settings 3.48
Table 3.40 SET P Serial Port Settings, Protocol = ASCII 3.52
Table 3.41 SET P Rear-Panel Serial Port Settings, Protocol = MOD 3.53
Table 3.42 SET R SER Trigger Settings 3.54
Table 3.43 Default SER Trigger Setting Relay Word Bits Definitions 3.56
Table 3.44 SET R SER Enable Alias Settings 3.58
Table 3.45 SET R SER Alias Settings 3.59

Section 4: Front-Panel Operation

Table 4.1: Front-Panel Automatic Messages 4.3
Table 4.2: Front-Panel Pushbutton Functions 4.5

Section 5: ASCII Serial Port Operation

Table 5.1 Pin Functions and Definitions for SEL-701-1 Monitor EIA-232 Serial Ports 5.4
Table 5.2 SEL-701-1 Monitor Serial Communication Default Settings 5.5
Table 5.3 Serial Port Control Characters 5.6
Table 5.4 SEL-701-1 Serial Port Command Summary 5.8
Table 5.5 SEL-701-1 Monitor Control Subcommand 5.12
Table 5.6 Event Commands 5.13
Table 5.7 EVE Command Examples 5.13
Table 5.8 LDP Command Options 5.14
Table 5.9 MSR General Command Format 5.19
Table 5.10 PULSE Command Format 5.20
Table 5.12 Serial Port SET Commands 5.22
Table 5.11 SER Command Options 5.22
Table 5.13 SET Command Editing Keystrokes 5.23
Table 5.14 SET Command Format 5.23
Table 5.15 SHOW Command Options 5.24
Table 5.16 STATUS Command Options 5.26
Table 5.17 TARGET Command Options 5.28
Table 5.18 Front-Panel LEDs and the TAR 0 Command 5.29
Table 5.19 SEL-701-1 Monitor Word and Corresponding TAR Command 5.30
Table 5.20 Serial Port Automatic Messages 5.32

Section 6: Commissioning

Table 6.1 Serial Port Commands That Clear Monitor Data Buffer 6.6
Table 6.2 Test Source Connections for Different Monitor Configurations .. 6.8
Table 6.3 Phase Current Measuring Accuracy 6.11
Table 6.4 Neutral Current Measuring Accuracy 6.12
Table 6.5 Current Unbalance Measuring Accuracy 6.13

Table 6.6 Thermal Element Expected Trip Times 6.14
Table 6.7 Analog Output Test 6.15
Table 6.8 100-Ohm Platinum RTD Type (RTDs 1–6) 6.16
Table 6.9 100-Ohm Platinum RTD Type (RTDs 7-12) 6.16
Table 6.10 120-Ohm Nickel RTD Type (RTDs 1–6) 6.17
Table 6.11 120-Ohm Nickel RTD Type (RTDs 7–12) 6.17
Table 6.12 100-Ohm Nickel RTD Type (RTDs 1–6) 6.18
Table 6.13 100-Ohm Nickel RTD Type (RTDs 7–12) 6.18
Table 6.14 10-Ohm Copper RTD Type (RTDs 1–6) 6.19
Table 6.15 10-Ohm copper RTD Type (RTDs 7–12) 6.19
Table 6.16 Power Measuring Accuracy Test Values, Wye Voltages 6.20
Table 6.17 Power Measuring Accuracy Test Values, Delta Voltages 6.21

Section 7: Metering & Monitoring

Table 7.1 Measured Values 7.2
Table 7.2 Demand Meter Values 7.3
Table 7.3 Max/Min Recorded Value 7.3
Table 7.4 Thermal Meter Values 7.4
Table 7.5 RTD Input Status Messages 7.4
Table 7.6 Energy Meter Values 7.5
Table 7.7 Load Profile Values 7.7

Section 8: Event Analysis

Table 8.1 SEL-701-1 Monitor Factory Front-Panel Target LED Definitions 8.2
Table 8.2 Event Commands 8.8
Table 8.3 EVE Command Options 8.8
Table 8.4 Event Report Current and Voltage Columns 8.9
Table 8.5 Output, Input, and Element Event Report Columns 8.9
Table 8.6 Retrieving SER Reports 8.12
Table 8.7 Example Sequential Events Recorder (SER) Event Report Explanations 8.18

Section 9: Maintenance & Troubleshooting

Table 9.1 Data Capture 9.2
Table 9.2 Monitor Self-Tests 9.3
Table 9.3 Enabled Front-Panel LED Dark 9.5
Table 9.4 Cannot See Characters on Monitor Front-Panel Display Screen 9.5
Table 9.5 Monitor Does Not Accurately Measure Voltages or Currents 9.5
Table 9.6 Monitor Does Not Respond to Commands From Device Connected to Serial Port 9.6
Table 9.7 Monitor Does Not Respond to Faults 9.6

Appendix A: Firmware Versions

Appendix B: SELOGIC® Control Equations and Monitor Logic

Table B.1 SEL-701-1 Relay Word Bits B.4
Table B.2 Relay Word Bit Definitions for SEL-701-1 ....B.5
Table B.3 SELOGIC Control Equation Operators (listed in processing order) B.12
Table B.4 SEL-701-1 Monitor Programmable Front-Panel LEDs B.18
Table B.5 Remote Control Switch B.34

Appendix C: Modbus® RTU Communications Protocol

Table C.1 Modbus Query Fields C.2
Table C.2 SEL-701-1Monitor Modbus Function Codes C.3
Table C.3 SEL-701-1 Monitor Modbus Exception Codes C.3
Table C.4 01h Read Coil Status Command C.5
Table C.5 02h Read Input Status Command C.6
Table C.6 03h Read Holding Registers Command C.7
Table C.7 04h Read Input Registers Command C.8
Table C.8 05h Force Single Coil Command C.9
Table C.9 SEL-701-1 Monitor Command Coils C.9
Table C.10 06h Preset Single Register Command C.10
Table C.11 07h Read Exception Status Command C.11
Table C.12 08h Loopback Diagnostic Command C.12
Table C.13 10h Preset Multiple Registers Command C.13
Table C.14 SEL-701-1 Monitor Modbus Command Region C.14
Table C.15 Modbus Command Codes C.14
Table C.16 Monitor Self-Test Result in Bit Definition C.16
Table C.17 Assign Event Report Channel Using Address 03A2h C.17
Table C.18 Modbus Register Map C.18

Appendix D: SEL-2020/SEL-2030 Compatibility Features

Table D.1 Binary Message List D.2
Table D.2 ASCII Configuration Message List D.2
Table D.3 A5C0 Monitor Definition Block D.3
Table D.4 A5C1 Fast Meter Configuration Block D.4
Table D.5 A5D1 Fast Meter Data Block D.9
Table D.6 A5C2/A5C3 Demand/Peak Demand Fast Meter Configuration Messages D.10
Table D.7 A5D2/A5D3 Demand/Peak Demand Fast Meter Message D.12
Table D.8 A5CE Fast Operate Configuration Block D.13
Table D.9 A5E0 Command D.14
Table D.10 A5E3 Command D.15
Table D.11 Compressed ASCII Commands D.18

Appendix E: Motor Thermal Element

Appendix F: SEL-701-1 Monitor Settings Sheets

List of Figures

Section 1: Introduction and Specifications

Figure 1.1 SEL-701-1 Monitor Functional Description 1.4
Figure 1.2 SEL-701-1 Monitor Applications 1.5
Figure 1.3 SEL-701-1 Monitor Serial Number Label. 1.10

Section 2: Installation

Figure 2.1 SEL-701-1 Monitor Mechanical Dimensions (Front and Top Views). 2.2
Figure 2.2 SEL-701-1 Monitor Cut and Drill Dimensions. 2.3
Figure 2.3 SEL-701-1 Monitor Panel Mounting Detail. 2.4
Figure 2.4 SEL-701-1 Monitor Rear Panel. 2.5
Figure 2.5 SEL-701-1 Monitor Left- and Right-Side Panel Drawings. 2.6
Figure 2.6 Example AC Wiring Diagram, Four-Wire Wye Voltages and Ground CT. 2.7
Figure 2.7 Example AC Wiring Diagram, Open-Delta Voltages and Residual IN Connection. 2.8
Figure 2.8 Example AC Voltage Wiring Diagram, Single Phase-to-Phase Voltage. 2.9
Figure 2.9 Example AC Voltage Wiring Diagram, Single Phase-to-Neutral Voltage. 2.9
Figure 2.10 Ground CT Placement. 2.12
Figure 2.11 Contact Output Factory Default Wiring Diagram. 2.14
Figure 2.12 Trip Contact Fail-Safe, NonFail-Safe Wiring Options. 2.15
Figure 2.13 Optional Motor Start Wiring Using Factory Default Settings for Output Contact OUT3. ..2.16
Figure 2.14 Contact Input Factory Default Wiring Diagram. 2.17
Figure 2.15 Analog Output Wiring. 2.18
Figure 2.16 RTD Input Wiring. 2.20
Figure 2.17 Rear-Panel EIA-485 Serial Port Connections. 2.23

Section 3: Settings Calculation

Figure 3.1 Phase Rotation Settings. 3.5
Figure 3.2 Generic Thermal Limit Curves, Cold Motor. 3.13
Figure 3.3 3000 HP Example Motor Cold Thermal Limit Curve. 3.18
Figure 3.4 Ground Fault Currents Using a Window CT. 3.23
Figure 3.5 SEL-701-1 LED Locations 3.46
Figure 3.6 Factory Tripping Logic. 3.49
Figure 3.7 Factory Contact Output Logic. 3.50
Figure 3.8 Factory Contact Input Logic. 3.50
Figure 3.9 Factory Event Triggering Logic. 3.51

Section 4: Front-Panel Operation

Figure 4.1 SEL-701-1 Monitor Front Panel. 4.1
Figure 4.2 Default Meter Display Screen. 4.2
Figure 4.3 Default Display Message Screen. 4.2

Figure 4.4 Front-Panel Pushbuttons. 4.4
Figure 4.5 Access Level Security Padlock Symbol. 4.5
Figure 4.6 Password Entry Screen. 4.6
Figure 4.7 Activate Front-Panel Display. 4.8
Figure 4.8 Front-Panel Main Menu. 4.8
Figure 4.9 Main Menu: Start Motor Function. 4.9
Figure 4.10 Main Menu: Emergency Restart Function. 4.9
Figure 4.11 Main Menu: Stop Motor Function. 4.9
Figure 4.12 Main Menu: Reset Trip/Targets Function. 4.10
Figure 4.13 Main Menu: Set Monitor Function. 4.10
Figure 4.14 Set Monitor\Monitor Elements Function. 4.11
Figure 4.15 Set Monitor\SER Setting Categories. 4.12
Figure 4.16 Set Monitor\Front Serial Port Settings. 4.13
Figure 4.17 Set Monitor\Rear Serial Port Settings. 4.14
Figure 4.18 Set Monitor\Date Function. 4.14
Figure 4.19 Set Monitor\Time Function. 4.15
Figure 4.20 Set Monitor\Password Function. 4.15
Figure 4.21 Main Menu: Meter Values Function. 4.16
Figure 4.22 Meter Values Display Functions. 4.16
Figure 4.23 Meter Values Reset Functions. 4.17
Figure 4.24 Main Menu: History Data Function. 4.17
Figure 4.25 History Data\Display History Function. 4.17
Figure 4.26 History Data\Clear History Function. 4.18
Figure 4.27 Main Menu: Motor Statistics Function. 4.18
Figure 4.28 Motor Statistics\Motor Use Data Function. 4.18
Figure 4.29 Motor Statistics\Average and Peak Data Function. 4.19
Figure 4.30 Motor Statistics\Trip and Alarm Data Function. 4.19
Figure 4.31 Motor Statistics\Reset Statistics Function. 4.20
Figure 4.32 Main Menu: Status of Monitor Function. 4.20
Figure 4.33 Main Menu: View Relay Word Function. 4.21
Figure 4.34 Main Menu: Pulse Out Contact Function. 4.21
Figure 4.35 Pulse Output Contact Menu Function. 4.21
Figure 4.36 Main Menu: Reset Thermal Model Function. 4.22
Figure 4.37 Main Menu: Reset Learned Param Function. 4.22
Figure 4.38 Reset Learned Param\Reset Cooling Time Function. 4.22
Figure 4.39 Reset Learned Param\Reset Start Therm Cap Function. 4.23

Section 5: ASCII Serial Port Operation

Figure 5.1 Cable C234A Pinout. 5.3
Figure 5.2 DB-9 Connector Pinout for EIA-232 Serial Ports. 5.3
Figure 5.3 HELP Command Response. 5.10
Figure 5.4 2AC Command Example. 5.11
Figure 5.5 ANA Command Example. 5.11
Figure 5.6 DATE Command Example. 5.13
Figure 5.7 HISTORY Command Example. 5.14
Figure 5.8 METER Command Example. 5.16
Figure 5.9 METER D Command Example. 5.16

Figure 5.10 METER E Command Example. 5.17
Figure 5.11 METER M Command Example. 5.17
Figure 5.12 METER T Command Example. 5.18
Figure 5.13 PULSE Command Example. 5.21
Figure 5.14 RLP Command Example. 5.21
Figure 5.15 SHOW Command Example. 5.25
Figure 5.16 STATUS Command Example. 5.27
Figure 5.17 TARGET Command Example. 5.28
Figure 5.18 TIME Command Example. 5.31
Figure 5.19 TRIGGER Command Example. 5.31

Section 6: Commissioning

Figure 6.1 Three-Phase AC Connection Test Signals. 6.4
Figure 6.2 Open-Delta AC Potential Connection Test Signals. 6.5
Figure 6.3 Three Voltage Source and Three Current Source Test Connections 6.9
Figure 6.4 Two Voltage Source and Three Current Source Test Connections 6.10

Section 7: Metering & Monitoring

Figure 7.1 Power Measurement Conventions. 7.6
Figure 7.2 LDP Command Response. 7.7
Figure 7.3 MOTOR Command Example. 7.10
Figure 7.4 Motor Start Report Example. 7.12
Figure 7.5 Motor Start Trending Report Example. 7.13

Section 8: Event Analysis

Figure 8.1 Example Event Report. 8.16
Figure 8.2 Example Sequential Events Recorder (SER) Event Report. 8.17

Section 9: Maintenance & Troubleshooting

Appendix A: Firmware Versions

Appendix B: SELOGIC® Control Equations and Monitor Logic

Figure B.1 Monitor Processing Order. B.3
Figure B.2 Result of Falling-Edge Operator on a Deasserting Underfrequency Element. B.14
Figure B.3 SELOGIC Control Equation Variable Timer Logic. B.21
Figure B.4 Traditional Latching Relay. B.22
Figure B.5 Latch Control Switches Drive Latch Bits LT1 through LT4. ....B.22
Figure B.6 Stop/Trip Logic. B.25
Figure B.7 Start Logic. B.27
Figure B.8 Remote Control Switches Drive Remote Bits RB1 through RB4. .....B.34
Figure B.9 Undervoltage Element Logic. B.36
Figure B.10 Underpower Element Logic. B.36
Figure B.11 Current Unbalance Element Logic. B.37
Figure B.12 Phase Reversal Element Logic. B.38
Figure B.13 Overcurrent Element Logic. B.39

Figure B.14 Power Factor Elements Logic. B.40
Figure B.15 Overvoltage Element Logic. B.41
Figure B.16 Over-/Underfrequency Element Logic. B.43
Figure B.17 Load-Jam Elements Logic. B.44
Figure B.18 Load-Loss Logic; No Voltage Option. B.44
Figure B.19 Load-Loss Logic; Voltage Option Included. B.45
Figure B.20 Reactive Power Elements Logic. B.46
Figure B.21 Speed Switch Tripping Logic. B.46

Appendix C: Modbus® RTU Communications Protocol

Appendix D: SEL-2020/SEL-2030 Compatibility Features

Appendix E: Motor Thermal Element

Figure E.1 Motor Thermal Limit Characteristic Plotted With Motor Starting Current. E.4
Figure E.2 Electrical Analog of a Thermal System. E.5
Figure E.3 Typical Induction Motor Current, Torque, and Rotor Resistance versus Slip. E.6
Figure E.4 Motor Starting Thermal Element. E.8
Figure E.5 Motor Running Thermal Element With Resistance and Trip Level Undefined. E.9
Figure E.6 Calculating the Normal Operating Energy Using Locked Rotor Trip Times. E.9
Figure E.7 Motor Running Thermal Element. E.10

Appendix F: SEL-701-1 Monitor Settings Sheets

List of Equations

Section 1: Introduction and Specifications

Section 2: Installation

Section 3: Settings Calculation

Equation 3.1 ..... 3.21
Equation 3.2 ..... 3.27
Equation 3.3 ..... 3.27
Equation 3.4 ..... 3.35

Section 4: Front-Panel Operation

Section 5: ASCII Serial Port Operation

Section 6: Commissioning

Section 7: Metering & Monitoring

Section 8: Event Analysis

Section 9: Maintenance & Troubleshooting

Appendix A: Firmware Versions

Appendix B: SELOGIC® Control Equations and Monitor Logic

Equation B.1 ..... B.13
Equation B.2 ..... B.13
Equation B.3 ..... B.13
Equation B.4 ..... B.14
Equation B.5 ..... B.28

Appendix C: Modbus® RTU Communications Protocol

Appendix D: SEL-2020/SEL-2030 Compatibility Features

Appendix E: Motor Thermal Element

Equation E.1 ..... E.5
Equation E.2 ..... E.6
Equation E.3 ..... E.6
Equation E.4 ..... E.7
Equation E.5 ..... E.7
Equation E.6 ..... E.7
Equation E.7 ..... E.7
Equation E.8 ..... E.11
Equation E.9 ..... E.13

Appendix F: SEL-701-1 Monitor Settings Sheets

This page intentionally left blank

List of Examples

Section 1: Introduction and Specifications

Example 1.1 SEL-701-1 Monitor Part Number Creation 1.8

Section 2: Installation

Example 2.1 Phase CT Ratio Selection 2.11

Section 3: Settings Calculation

Example 3.1 Phase CT Ratio Setting Calculation 3.4
Example 3.2 Phase VT Ratio Setting Calculations..... 3.6
Example 3.3 Thermal Element Rating Method Setting 3.9
Example 3.4 Locked Rotor Trip Time Dial Setting Calculation 3.10
Example 3.5 Thermal Element Generic Method Setting 3.12
Example 3.6 Thermal Element User Method Setting 3.17
Example 3.7 Learned Starting Thermal Capacity Calculation 3.20
Example 3.8 Ground Fault CT Application 3.23

Section 4: Front-Panel Operation

Section 5: ASCII Serial Port Operation

Section 6: Commissioning

Section 7: Metering & Monitoring

Section 8: Event Analysis

Section 9: Maintenance & Troubleshooting

Appendix A: Firmware Versions

Appendix B: SELOGIC® Control Equations and Monitor Logic

Example B.1 Breaker Auxiliary Contact SELOGIC Control Equation Setting B.26
Example B.2 Initiating a Motor Start Using a Monitor Contact Input B.27

Appendix C: Modbus® RTU Communications Protocol

Appendix D: SEL-2020/SEL-2030 Compatibility Features

Appendix E: Motor Thermal Element

Example E.1 Starting and Running Trip Level Calculations E.11

Appendix F: SEL-701-1 Monitor Settings Sheets

This page intentionally left blank

Manual Change Information

The date code at the bottom of each page reflects the most recent release date of this manual. With each release, the table of contents, list of tables, list of figures, list of equations, list of examples, and index are updated. Changes in this manual since its initial release are summarized in the table below (most recent releases listed at the top).

Release Date	Summary of Changes in this Release
This *Manual Change Information* section is provided as a record of changes made to this manual since the initial release.	
20011005	Update Appendix D.
20010815	Date of Initial Release.

This page intentionally left blank

Section 1

Introduction and Specifications

Introduction

The SEL-701-1 Monitor is designed to protect three-phase, medium voltage motors. The basic monitor provides locked rotor, overload, unbalance, and short-circuit protection functions. You can select options that add voltage-based and RTD-based protection and monitoring capabilities. All monitor models offer innovative monitoring functions, such as:

- Motor Start Reports and Motor Start Trend Data.
- Load Profiling.
- Motor Operating Statistics.
- Event Reports and Summaries and a Sequential Events Record (SER).
- Complete Suite of Accurate Metering Functions.

This manual contains the information you need to select, install, set, test, operate, and maintain any SEL-701-1 Monitor. You probably will not need to review the whole book to perform the specific tasks that are your responsibility. The following is an overview of the sections in this instruction manual:

Section 1: Introduction & Specifications. Describes how to locate information in this instruction manual; describes the basic features and functions of the SEL-701-1 Monitor; shows how to create an SEL-701-1 Monitor part number; lists the SEL-701-1 Monitor specifications.

Section 2: Installation. Describes how to mount and wire the SEL-701-1 Monitor; illustrates wiring connections for various applications.

Section 3: Settings Calculation. Describes how to calculate and record settings for basic motor protection, RTD-based protection functions, and voltage-based functions.

Section 4: Front-Panel Operation. Explains the features and use of the SEL-701-1 Monitor front panel, including front-panel command menu, default displays, and automatic messages.

Section 5: ASCII Serial Port Operation. Describes how to connect the SEL-701-1 Monitor to a PC for communication; shows serial port connector pinouts; lists and defines serial port commands.

Section 6: Commissioning. Describes the monitor commissioning procedure; provides protection element test procedures.

Section 7: Metering & Monitoring. Describes the operation of metering functions, load profiling function, motor operating statistics function, motor start reports, and motor start trending function.

Section 8: Event Analysis. Describes front-panel target LED operation, trip-type front-panel messages, event summary data, standard 15-cycle event reports, and Sequential Events Recorder (SER) report.

Section 9: Maintenance & Troubleshooting. Describes monitor self-test alarms, monitor troubleshooting, and power supply fuse replacement; provides firmware upgrade instructions.

Appendix A: Firmware Versions. Lists the current monitor firmware version and details differences between the current and previous versions.

Appendix B: SELogic® Control Equations and Monitor Logic. Discusses the relay word, SELOGIC control equations, motor stop and start logic, local and remote control switches, and front-panel display configuration; provides tables detailing all Relay Word bits and their definitions.

Appendix C: Modbus® RTU Communications Protocol. Describes the Modbus protocol support provided by the SEL-701-1 Monitor.

Appendix D: SEL-2020/SEL-2030 Compatibility Features. Describes commands implemented to support the SEL communications processors.

Appendix E: Motor Thermal Element. Contains a fundamental description of the SEL-701-1 Monitor's thermal element. Describes interpretation of % Thermal Capacity and Thermal Capacity Used to Start quantities.

Appendix F: SEL-701-1 Monitor Settings Sheets. Contains completed monitor settings sheets containing factory default settings and blank settings sheets you can photocopy and complete to record settings for the SEL-701-1 Monitor.

SEL-701-1 Monitor Command Summary. Briefly describes the serial port commands that are described in detail in *Section 5: ASCII Serial Port Operation*.

Typographic Conventions

Table 1.1 Typographic Conventions

Example	Description
OTTER	Commands you type appear in bold/uppercase.
<ENTER>	Computer keys you press appear in bold/uppercase/brackets.
{ENTER}	Monitor front-panel buttons you press appear in bold/uppercase/curly brackets.
Set Monitor\Front Port	Front-panel menu functions you select in sequence are shown with a backslash [\] between the main menu selection and subsequent selections.
SEL-701-1 MONITOR	Monitor serial port command responses.
Section 1: Introduction & Specifications	Manual section and heading names are shown in italics.
`SEL-701-1` `MONITOR`	Monitor front-panel display information and examples.

SEL-701-1 Monitor Models

This instruction manual covers the SEL-701-1 Monitor models listed in *Table 1.2*.

Table 1.2 SEL-701-1 Monitor Models

SEL-701-1 Monitor Model Number	Internal RTD Inputs	Voltage Inputs	Current Inputs
0701100X	No	No	IA, IB, IC, IN
0701110X	11	No	IA, IB, IC, IN
0701101X	No	Wye or Delta	IA, IB, IC, IN
0701111X	11	Wye or Delta	IA, IB, IC, IN

Refer to *Monitor Part Number on page 1.8* for more information on creating an SEL-701-1 Monitor part number. When differences between the SEL-701-1 Monitor models in *Table 1.2* are explained, model numbers are referenced for clarity.

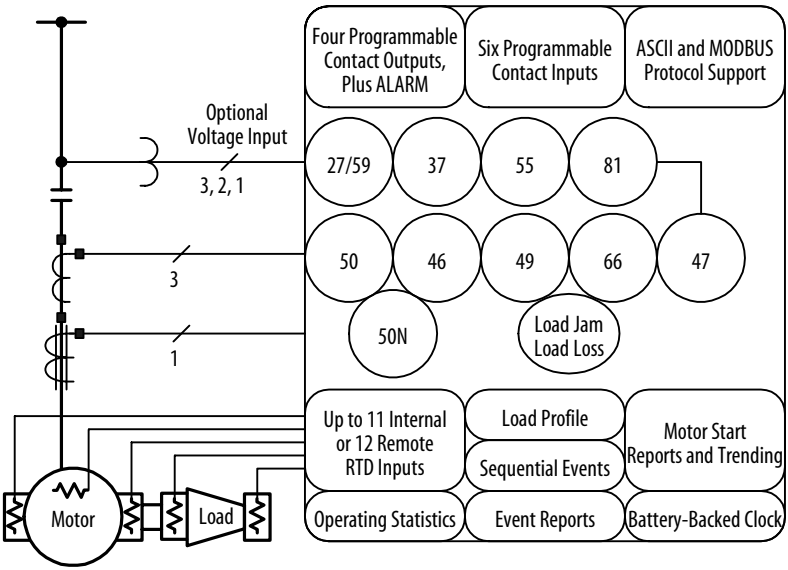

Figure 1.1 SEL-701-1 Monitor Functional Description

SEL-701-1 Monitor Applications

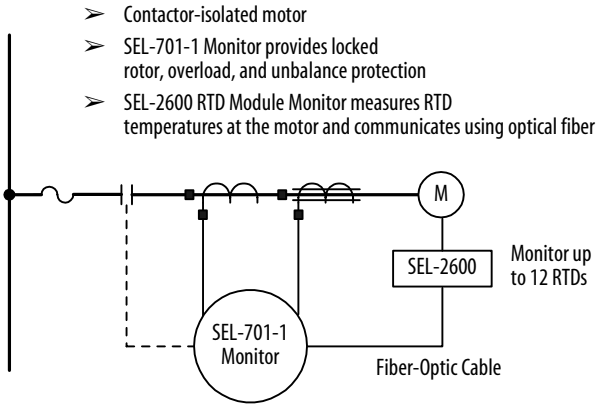

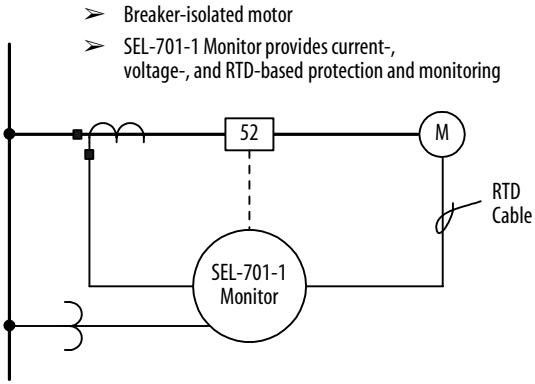

Figure 1.2 SEL-701-1 Monitor Applications

SEL-701-1 Monitor Protection Features

The SEL-701-1 Monitor offers a full range of elements for motor protection, including:

- Flexible motor thermal element (49) that provides integrated protection for locked rotor, running overload, unbalanced current/negative-sequence current heating, and repeated or frequent starts.
- Phase, neutral, residual, and negative-sequence overcurrent (50) elements for tripping due to motor or cable short circuits.
- Load-loss and load-jam protection.
- Antijogging protection (66) function using minimum time between starts and number of starts per hour limit functions.
- Unbalance current (46) element and phase reversal (47) element protection.
- Optional RTD inputs through an 11-input internal RTD option or through purchase of the SEL-2600 RTD Module. The SEL-2600 RTD Module connects to the monitor through a fiber-optic cable and provides 12 RTD inputs plus an additional contact input. Select the RTD type for each input from a list of four popular types. Each RTD input has 1 TRIP and 3 ALARM setpoints
- Optional voltage inputs that support four-wire wye, open-delta, or single-phase voltage inputs and provide voltage-based protection and metering functions. Added functions include over- and undervoltage elements, over- and underfrequency elements, underpower elements, reactive power elements, power factor elements, plus power and energy metering.
- Support to control contactors or medium-voltage motor circuit breakers.
- Fail-safe and nonfail-safe settings for monitor output contacts.

SEL-701-1 Monitoring and Reporting Features

In addition to the protection functions outlined earlier, the SEL-701-1 Monitor offers advanced measuring and monitoring capabilities not found in other motor monitors, including:

- Extensive metering capabilities that provide real-time operating data.
- Configurable front-panel display that replaces separate panel meters.
- A load profiling function that records currents, voltages, and RTD temperatures every 15 minutes for over 30 days.
- Event and SER reports that offer detailed information about electrical faults.
- Motor start reporting that shows current, voltage, and thermal element values through 60 seconds of motor start. Use this information to validate transformer and cable sizing and confirm motor starting simulations.
- Motor start trending that shows average accelerating times, maximum currents, and minimum voltages for each of the past eighteen 30-day periods.
- SELOGIC control equations that allow you to customize the operation of contact inputs and outputs for your specific applications, if necessary.
- Programmable LEDs that allow a SELOGIC control equation to control each LED.

Monitor Part Number

To obtain a quotation or place an order for an SEL-701-1 Monitor, it is helpful to have a monitor part number. The following information helps you create a part number for the SEL-701-1 Monitor and provides some additional information that you may wish to include when you place your monitor order.

Create a Monitor Part Number

The SEL-701-1 Monitor part number has the following form:

0 7 0 1 1 **a** **b** X

The answers to the questions listed in *Table 1.3* will determine the value of options **a** and **b**.

Table 1.3 SEL-701-1 Monitor Part Number Creation Table

	Question	Then
1	Does your application require 11 internal RTD inputs?	
	a) Yes	a = 1
	b) No	a = 0
2	Does your application require ac voltage inputs?	
	a) Yes	b = 1
	b) No	b = 0

EXAMPLE 1.1 SEL-701-1 Monitor Part Number Creation

The part number 0701101X describes an SEL-701-1 Monitor equipped without internal RTD inputs and with ac voltage inputs.

Formula	0701	1	a	b	X
Part No.	0701	1	0	1	X

All SEL-701-1 Monitors are equipped with 1 A and 5 A nominal CT inputs, a broad operating range power supply (20–250 ±20% Vdc <15 VA or 95–240 ±10% Vac 50/60 Hz), a single analog current output with settable range, six (6) self-wetted contact inputs, and four (4) programmable form-C contact outputs. Refer to the *Specifications on page 1.11* for more product operating range information.

Communication Cables

Remember to order required serial communication cables with the monitor.

- Use SEL Cable C234A or a null-modem cable to connect the monitor front-panel serial port to a PC 9-pin serial port for setting upload and download and for other activities during monitor installation and operation. This cable is **not** included with the monitor. You can purchase this cable separately from SEL or build your own using the cable pinout shown in *Connect Your PC to the Monitor on page 5.3 in Section 5: ASCII Serial Port Operation.*
- Use fiber-optic cable C801FD to connect the monitor rear-panel fiber-optic receiver port to an SEL-2600 RTD Module. You can also purchase this cable directly from SEL.
- Use the free SEL-5801 Cable SELECTOR software (available for free download at the SEL web site, www.selinc.com) to help determine the other communication cables you need for a particular application.

Place a Request for Quotation or Order

You may order an SEL-701-1 Monitor from your local SEL Sales Representative or International Distributor Office, one of SEL's Regional Technical Service Centers, or directly from the factory. Contact the SEL factory by telephone at (509) 332-1890 or by fax at (509) 332-7990.

SEL-701-1 Monitor Serial Number Label

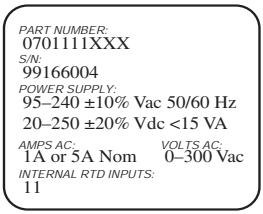

Figure 1.3 SEL-701-1 Monitor Serial Number Label.

Figure 1.3 shows the serial number label for the SEL-701-1 Monitor. The label is affixed to the top of the monitor chassis. From the top of the label, the information includes:

- Monitor part number.
- Monitor serial number.
- Power supply ratings.
- AC current input ratings.
- AC voltage input ratings, or ‘None’ if voltage option was not ordered.
- Number of internal RTD inputs, either 11 or ‘None’.

Specifications

Standard Monitor Features & Functions

Phase Current Inputs

Nominal Current, I_{NOM}: 1 A or 5 A
Range: 0.05–20.00 • I_{NOM}
Burden: 0.14 VA @ 5 A, 5 A tap
0.06 VA @ 1 A, 1 A tap
Continuous: 3 • I_{NOM}
200 Second Thermal: 10 • I_{NOM}
10 Second Thermal: 20 • I_{NOM}
1 Second Thermal: 50 • I_{NOM}
Measuring Error: ±1%, ±0.01 • I_{NOM}

Neutral/Ground Current Input

Nominal Current, IN_{NOM}: 1 A or 5 A
Range: 0.005–2.000 • IN_{NOM}
Burden: 0.28 VA @ 5 A, 5 A tap
0.19 VA @ 1 A, 1 A tap
Continuous: 0.3 • IN_{NOM}
1 Second Thermal: 5.0 • IN_{NOM}
Measuring Error: ±1%, ±0.01 • I_{NOM}

Motor Thermal Model

Locked Rotor Time: 1.0–240.0 s
Locked Rotor Current: 0.5–16.0 • I_{NOM}
Service Factor: 1.0–1.5
Setting Modes:
45 standard curve shapes
Nameplate ratings
Custom curve shape
Pickup Error: <±1%, ±0.01 • I_{NOM}
Timing Error: ±2.5%, ±25 ms for currents > 1.1 times multiples of pickup
Independent Stop/Run Cooling Rates
Thermal estimate retained through monitor power cycle.

Overcurrent Elements (Phase, Residual, Negative-Sequence)

Setting Range: 0.05–20.00 • I_{NOM}
Time Delays: 0.00–400.00 s

Neutral/Ground Overcurrent Element

Setting Range: 0.005–2.000 • IN_{NOM}
Time Delays: 0.00–400.00 s

Current Unbalance Element

Alarm and Trip Elements
Setting Range: 2%–80%
Time Delays: 0.00–400.00 s
Error: <±1%
Definitions
For I_{av} > FLA
$UB\% = 100\% \cdot |I_m - I_{av}|/I_{av}$
For I_{av} < FLA
$UB\% = 100\% \cdot |I_m - I_{av}|/FLA$
Where:
I_{av} = Avg phase current
I_m = Phase most different from I_{av}
FLA = Motor rated full load amps

Load-Loss/Load-Jam Function

Load-Loss Alarm and Trip
Setting Range: 0.10–1.00 • FLA
Load-Jam Trip
Setting Range: 0.5–6.0 • FLA
Time Delays: 0.00–400.00 s

Starts Per Hour, Time Between Starts

Maximum Starts/Hour: 1–15 starts
Minimum Time Between Starts: 1–150 minutes
Start data retained through monitor power cycle.

Phase Reversal Tripping

Phase reversal tripping based on current or optional voltage inputs.

Meter Accuracy

Current Metering: <±1%, ±0.01 • I_{NOM}
Demand Current Metering: <±1%
Opt. Voltage Metering: <±1%, ±0.2 V
Opt. Power Metering: ±2%
Opt. Power Factor Metering: <±1.5%
Opt. Frequency Metering: ±0.01 Hz
Opt. kW, kVa, kVAR Demand: ±2%

Analog Output

Single Analog Current Output
Settable Range: 0–1 mA, 0–20 mA, 4–20 mA
Max. Load: 8 k or 400 ohms
Error: ±0.5%, Full Scale
Select from:
%FLA, %Thermal Cap, Hottest RTD, Avg phase current, Max. phase current

Contact Inputs

6 Self-Wetted Contact Inputs, Programmable Function

Contact Outputs

1 Trip Contact, 3 Programmable Contacts, Monitor Self-Test Alarm
Form C Contacts
Make/Carry/Interrupt Ratings
Make: 30 A
Carry: 6 A
Interrupt: 8 A Resistive @ 250 Vac
0.75 A, L/R = 40 ms @ 24 Vdc
0.50 A, L/R = 40 ms @ 48 Vdc
0.30 A, L/R = 40 ms @ 125 Vdc
0.20 A, L/R = 40 ms @ 250 Vdc

Serial Ports

Front-Panel EIA-232 Port: 300–19200 baud
ASCII text communication
Rear Panel
ASCII EIA-232 port: 300–19200 baud
Or Modbus™ EIA-485 port: 300–19200 baud
EIA-485 port isolation: 500 V

Optional Features & Functions

Optional Phase Voltage Inputs

Nominal Voltage: 0–300 Vac
Four-Wire Wye or Open-Delta Voltages
Burden: <2 VA at 300 V
Measuring Error: ±1%, ±0.2 V

Over-/Undervoltage Elements
Setting Range: 1–300 Vac
Two Phase Overvoltage Elements
Two Phase Undervoltage Elements
One Residual Overvoltage Element

Power Factor Element
Alarm and Trip Levels
Setting Range: 0.05–0.99 pf
Time Delays: 0.00–400.00 s
Measuring Error: <±1.5%

Reactive Power Element
Alarm and Trip Levels
Setting Range: 30–2000 VAR, 5 A tap
6–400 VAR, 1 A tap
Time Delays: 0.00–400.00 s
Measuring Error: <±2%

Underpower Element
Alarm and Trip Levels
Setting Range: 30–2000 W, 5 A tap
6–400 W, 1 A tap
Time Delays: 0.00–400.00 s
Measuring Error: <±2%

Over/Underfrequency Elements
Three Settable Levels
Setting Range: 20.00–70.00 Hz
Time Delays: 0.00–400.00 s
Error: ±0.01 Hz

Optional Internal RTD Inputs
11 Internal RTD Inputs
Monitor Winding, Bearing, Ambient, or Other Temperatures
PT100, Ni100, Ni120, and Cu10 RTD-Types Supported, Field Selectable

Trip and Alarm Temperatures
Setting Range: 0°–250°C
Error: <±2°C
Open and Short Circuit Detection
Trip Voting
Thermal Model Biasing
Motor Cooling Time Learning

Optional External RTD Module
12 Remote RTD Inputs
Trip, Alarm, and Thermal Features as with Internal RTDs
Up to 500 m Away Using Fiber-Optic Cable
Adds Remote Speed Switch Input

Reporting Functions

Event Summaries/Event Reports
14 Latest Summaries and 15-Cycle Oscillographic Records
Resolution: 4 or 16 samples/cycle

Load Profile Function
Stores up to 17 quantities every 15 minutes for 48 days (without voltage option) or 34 days (with voltage option).

Sequential Events Records
512 Latest Time-Tagged Events

Motor Start Reports
5 Latest Starts
Report Length: 3600 cycles
Quantities stored every 5 cycles during and immediately after each start.

Motor Start Trend
Stores 30-day averages of starting data for each of the past eighteen 30-day periods.

Ratings, Type Tests, & Certifications

Operating Temperature Range
–40°C to +85°C
–40°F to +185°F

Power Supply Voltage Range
20–250 ±20% Vdc
95–240 ±10% Vac 50/60 Hz
<15 VA Total Burden
Hold-Up Time: 50 ms @125 Vdc
150 ms @ 120 Vac

Type Tests

Front Panel:	NEMA12/IP54
Dielectric:	IEC 255-5: 1977 IEEE C37.90: 1989, 2500 Vac on analogs, contact inputs, and contact outputs; 3100 Vdc on power supply, 2200 Vdc on EIA-485 communications port
Environmental:	IEC 68-2-1 : 1990 IEC 68-2-2 : 1974
Damp Heat Cycle:	IEC 68-2-30 : 1980
Impulse:	IEC 255-5 : 1977, 5 kV 0.5 J
Electrostatic Discharge:	EN 61000-4-2: 1995, Level 4 IEC 255-22-2 : 1996, Level 4
Radio Frequency Immunity:	IEC 801-3 : 1984 IEC 255-22-3 : 1989 ENV 50140: 1994 IEEE C37.90.2: 1987, 10 V/m
Fast Transient Burst:	EN 61000-4-4: 1995, Level 4 IEC 255-22-4 : 1992, Level 4
1 MHz Burst:	IEC 255-22-1 : 1988
Surge Withstand:	IEEE C37.90.1 : 1989
Magnetic Field Immunity:	EN 61000-4-8 : 1993, Level 5
Vibration:	IEC 255-21-1 : 1988
Endurance:	Class 1
Response:	Class 2
Shock and Bump:	IEC 255-21-2 : 1988
Bump:	Class 1
Shock Withstand:	Class 1
Shock Response:	Class 2
Seismic:	IEC 255-21-3 : 1993, Level 2

Certifications

ISO: Monitor is designed and manufactured to an ISO-9001 certified quality program.

UL/CSA: UL recognized to the requirements of UL-508; CSA C22.2, N.14 for Industrial Control Equipment; and UL-1053, "Ground-Fault Sensing and Relay Equipment."

CE: CE Mark.

This page intentionally left blank

Section 2

Installation

Panel Cut & Drill Plans

Figure 2.1 on page 2.2 shows the mechanical dimensions of the SEL-701-1 Monitor. *Figure 2.2 on page 2.3* shows the dimensions of the panel cutout required to mount the monitor.

DANGER: Contact with instrument terminals may cause electrical shock which can result in injury or death.

Guard against accidental contact with monitor rear terminals by mounting the monitor in an approved enclosure or by using any of the following methods:

- Locate the monitor in a room, vault, or similar enclosure that is accessible only to qualified persons.
- Locate the monitor on a suitable balcony, gallery, or platform that is elevated and accessible only to qualified persons.
- Use suitable permanent, substantial partitions or screens arranged so that only qualified persons have access to the space within reach of live parts. Locate and size any openings in partitions or screens so that neither people nor conducting objects are likely to come into accidental contact with live parts.

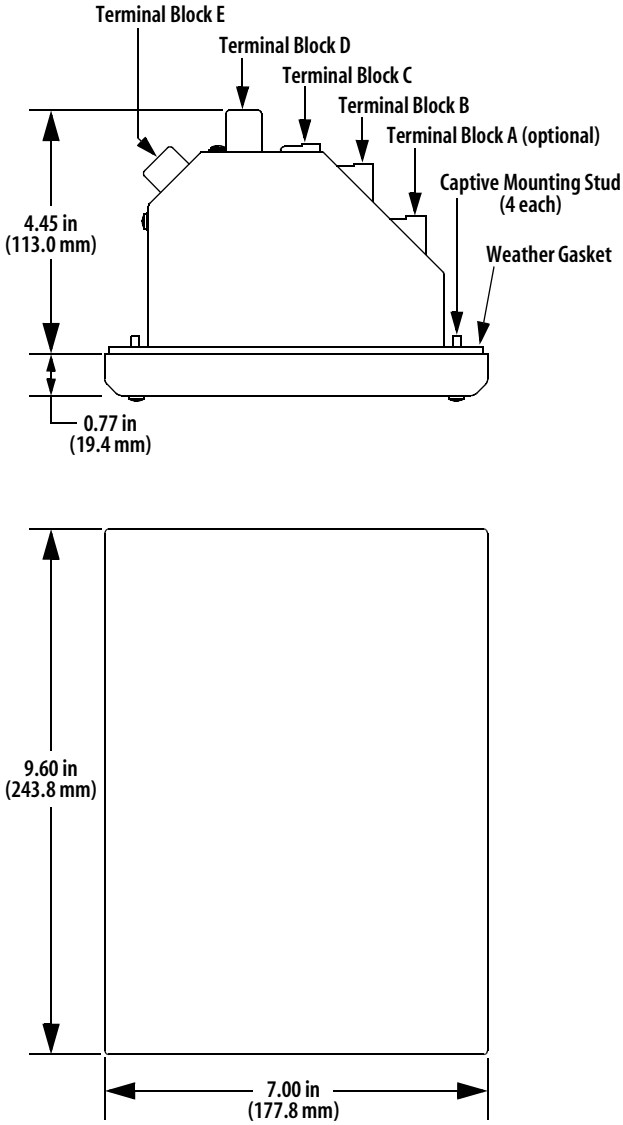

Figure 2.1 SEL-701-1 Monitor Mechanical Dimensions (Front and Top Views).

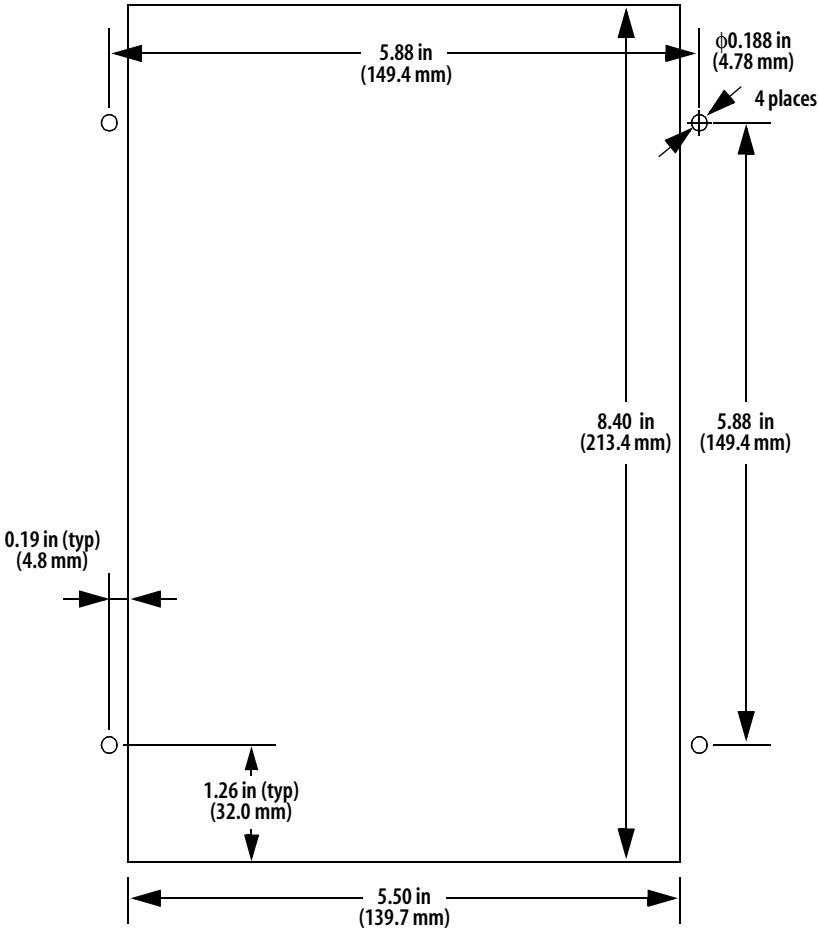

Figure 2.2 SEL-701-1 Monitor Cut and Drill Dimensions.

Monitor Mounting

Mount the monitor in the prepared panel cutout using the four mounting studs and the locknuts provided. Tighten the four nuts until snug (10–15 in/lb torque); be careful not to overtighten. Tightening these nuts causes the rubber weather seal to compress in the channel, pressing against the panel and sealing the cutout.

WARNING: Overtightening the mounting nuts may permanently damage the monitor chassis.

After mounting the monitor, you may remove the protective film that covers the rear panel. This film is meant to protect the monitor finish during installation and is not required by the monitor in operation.

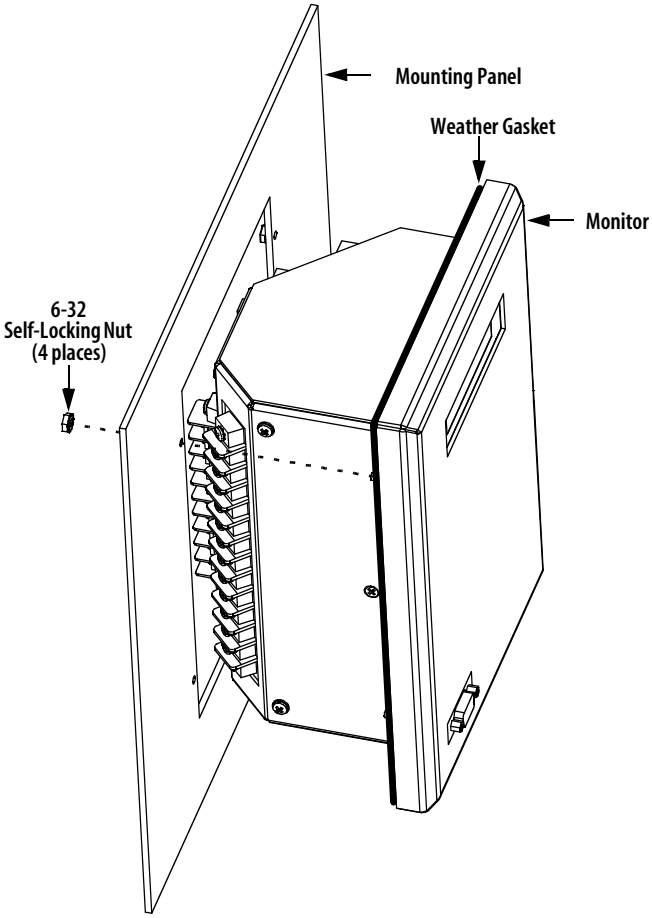

Figure 2.3 SEL-701-1 Monitor Panel Mounting Detail.

Monitor Rear-Panel Diagram

All monitor electrical connections, except the front-panel EIA-232 connections, are made at the monitor rear panel, shown in *Figure 2.4*. The monitor rear panel is designed with two 45° sections illustrated in *Figure 2.1 on page 2.2*. These cutaway areas provide additional clearance for swing-panel mounting. The monitor sides include drawings that indicate the factory default function of each monitor terminal and typical wiring diagrams.

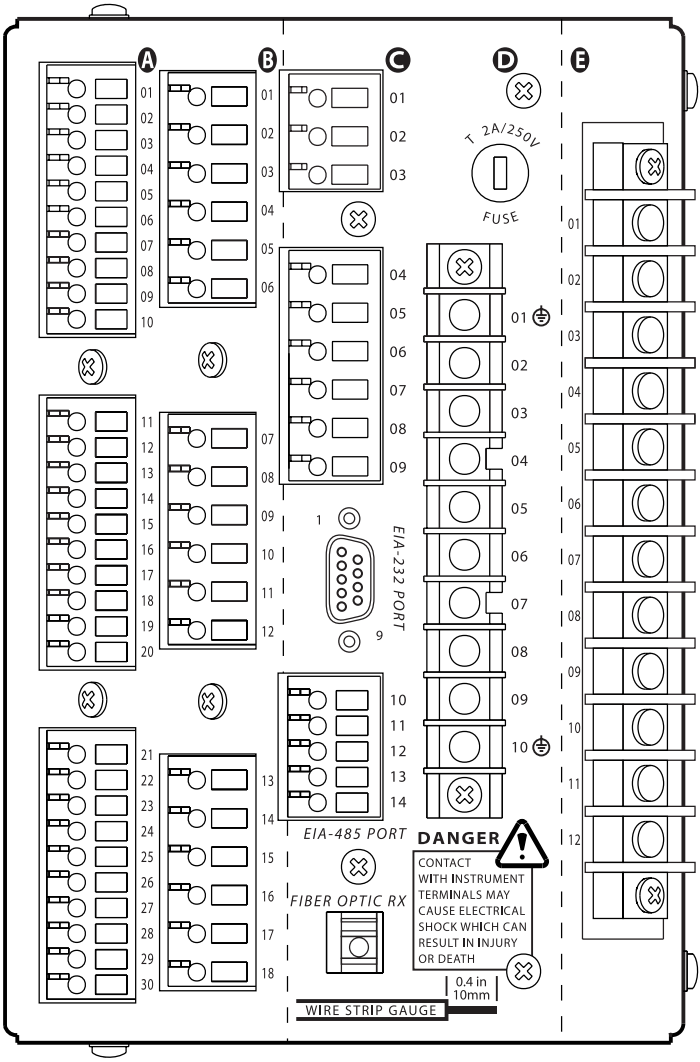

Figure 2.4 SEL-701-1 Monitor Rear Panel.

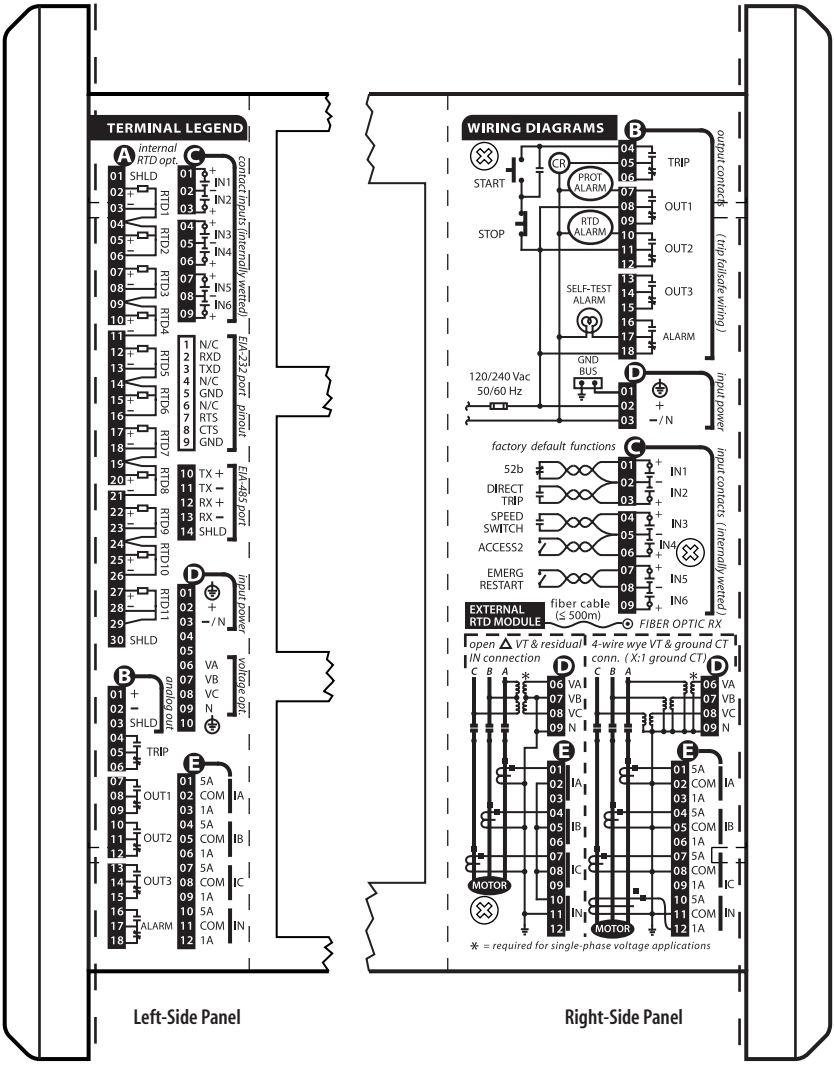

Figure 2.5 SEL-701-1 Monitor Left- and Right-Side Panel Drawings.

Example AC Wiring Diagrams

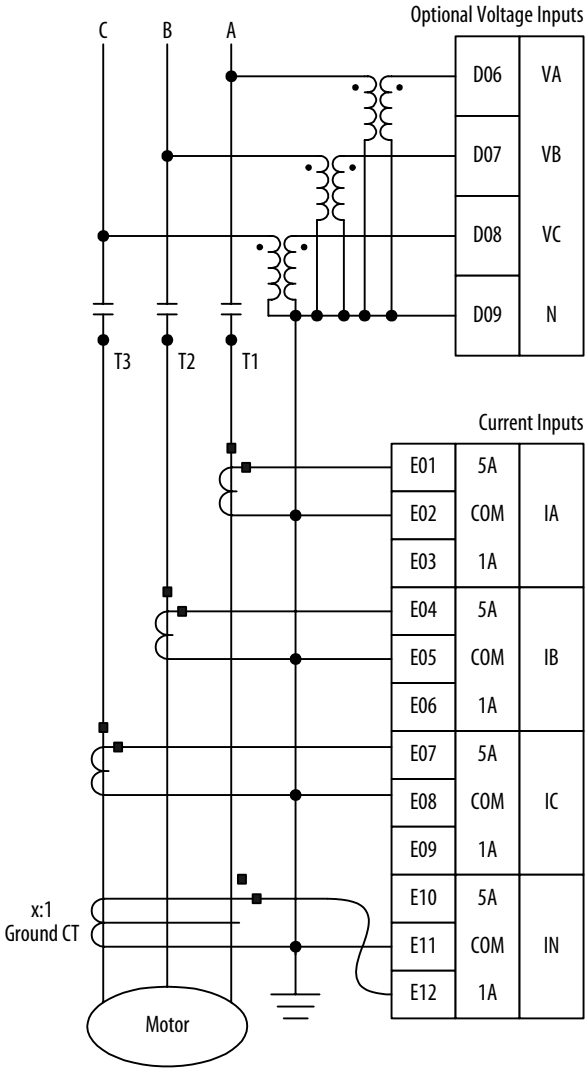

Figure 2.6 Example AC Wiring Diagram, Four-Wire Wye Voltages and Ground CT.

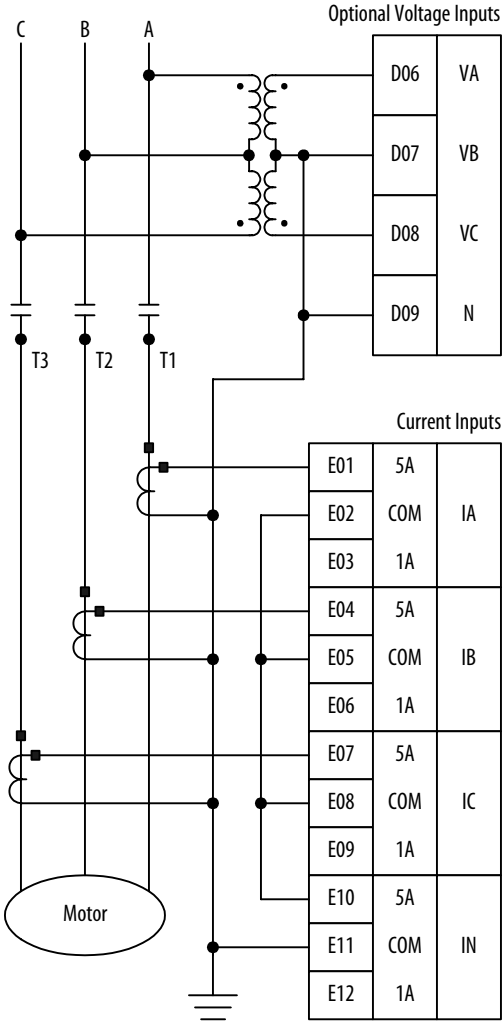

Figure 2.7 Example AC Wiring Diagram, Open-Delta Voltages and Residual IN Connection.

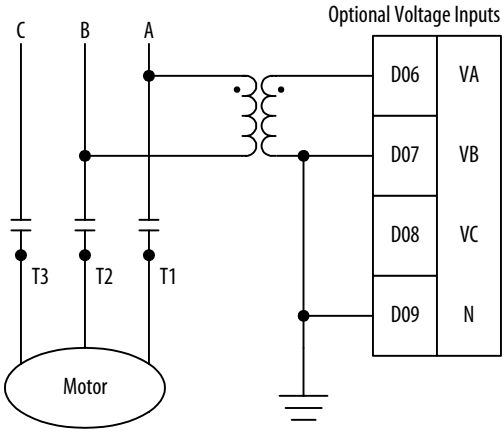

Figure 2.8 Example AC Voltage Wiring Diagram, Single Phase-to-Phase Voltage.

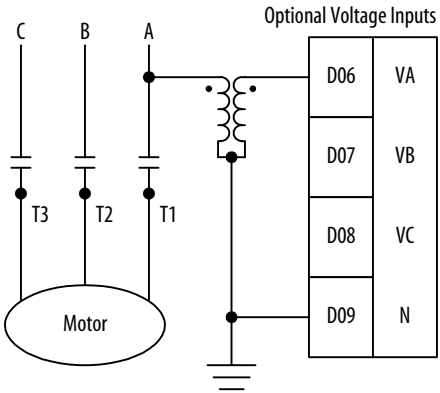

Figure 2.9 Example AC Voltage Wiring Diagram, Single Phase-to-Neutral Voltage.

Monitor Connections

DANGER: Contact with instrument terminals may cause electrical shock which can result in injury or death.

Input Power Connections

The SEL-701-1 Monitor power supply has a broad operating range that can accept ac or dc inputs.

Power Supply Operating Range:

- 95–240 ±10% Vac 50/60 Hz.
- 20–250 ±20% Vdc.
- <15 VA, typical.

The monitor power supply is fused internally. If the fuse operates, make sure that the cause of the fuse operation has been isolated and corrected before replacing the fuse and returning the monitor to service. See *Section 9: Maintenance & Troubleshooting* for instructions on how to replace the power supply fuse.

Replacement Power Supply Fuse Ratings: T 2 A/250 V, high breaking capacity.

Monitor Chassis Ground Connection

Terminals D01 and D10 are the chassis ground terminals. At least one of these terminals must be solidly connected to the cabinet ground bus for correct monitor operation and personal safety.

Current Transformer Inputs

The SEL-701-1 Monitor is equipped with four current transformer inputs: IA, IB, IC, and IN. Each input can accept either 1 A nominal or 5 A nominal CT secondary inputs.

The monitor sequence current and power measurements are sensitive to the polarity of current applied to the monitor. Make sure that the current connections observe the polarity markings shown in *Figure 2.6 on page 2.7* and *Figure 2.7 on page 2.8*. Connect the CT nonpolarity lead to the COM CT terminal. Connect the CT polarity lead to the 5 A or 1 A input, depending on the secondary rating of the CT.

Select the phase CT ratios so that the motor full load current is greater than 50% of the CT primary rating.

EXAMPLE 2.1 Phase CT Ratio Selection

A 200 HP, 575 V, three-phase motor draws 192 A at full load. Use one of the following CT ratios:

- 200:5.
- 250:5.
- 300:5.

Ground Current Transformer Input

The monitor IN input can be connected in either of two ways, as shown in *Figure 2.6 on page 2.7* and *Figure 2.7 on page 2.8*. The preferred method is the ground CT method in *Figure 2.6*. Connecting the IN input residually, as in *Figure 2.7*, requires you to select a relatively high overcurrent element pickup setting to avoid tripping due to false residual current caused by CT saturation during high starting current. The IN connection shown in *Figure 2.6* is preferred and provides for a lower ratio flux-balance CT that avoids saturation and provides greater ground fault sensitivity.

When you use a ground CT, its placement is critical and depends on the type of cable used to connect the motor to the source. As *Figure 2.10 on page 2.12* shows, using unshielded cable requires that the CT be placed between the neutral connection to ground and the motor, with the neutral lead included in the CT window. With shielded cable, the shield connection to ground must pass through the CT window.

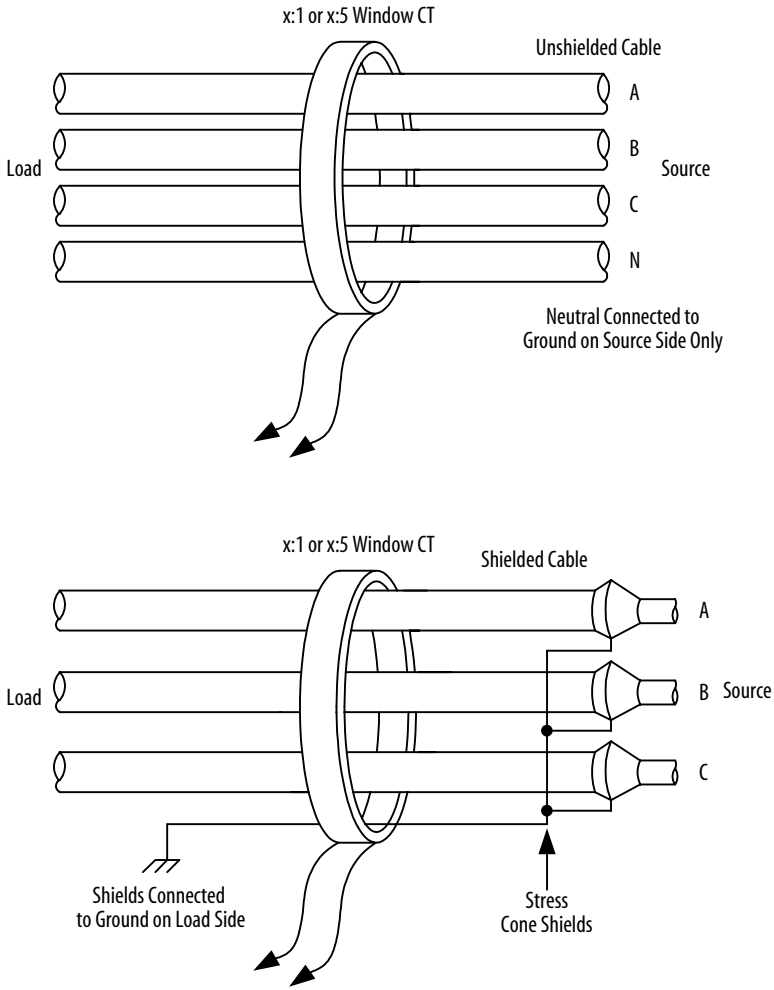

Figure 2.10 Ground CT Placement.

Contact Outputs

The SEL-701-1 Monitor is equipped with five contact outputs. Each one provides a normally opened and a normally closed contact. The contacts are rated to switch 8 A resistive at 250 Vac. For dc operation, the contacts are rated for tripping duty, according to IEEE standards.

The contact positions indicated in *Figure 2.11 on page 2.14* and on the monitor chassis are the positions the contacts are in when the monitor is deenergized. The monitor self-test ALARM contact always operates in a fail-safe mode; you can use monitor settings to program the remaining outputs for fail-safe operation. When you set an output to operate in fail-safe mode, the monitor holds the contact in an energized position continuously, then deenergizes the contact to trip. The contact is also deenergized if the monitor input power is removed. The connections shown in *Figure 2.11 on page 2.14* are suitable for use with a motor contactor when trip fail-safe operation is desired.

When you set an output to operate in nonfail-safe mode, the monitor energizes the contact to trip. The contacts do not change position when monitor input power is removed.

NOTE: When you select trip fail-safe operation, the monitor will automatically trip the motor when input power is removed from the monitor or if the monitor fails. This is desirable if the protected motor is more valuable than the process the motor supports. If the process is more valuable than the motor, disable trip fail-safe operation and make appropriate wiring modifications. See *Output Contact Fail-Safe, Trip Duration, & Starting Lockout Settings on page 3.47 in Section 3: Settings Calculation* for additional information on fail-safe settings.

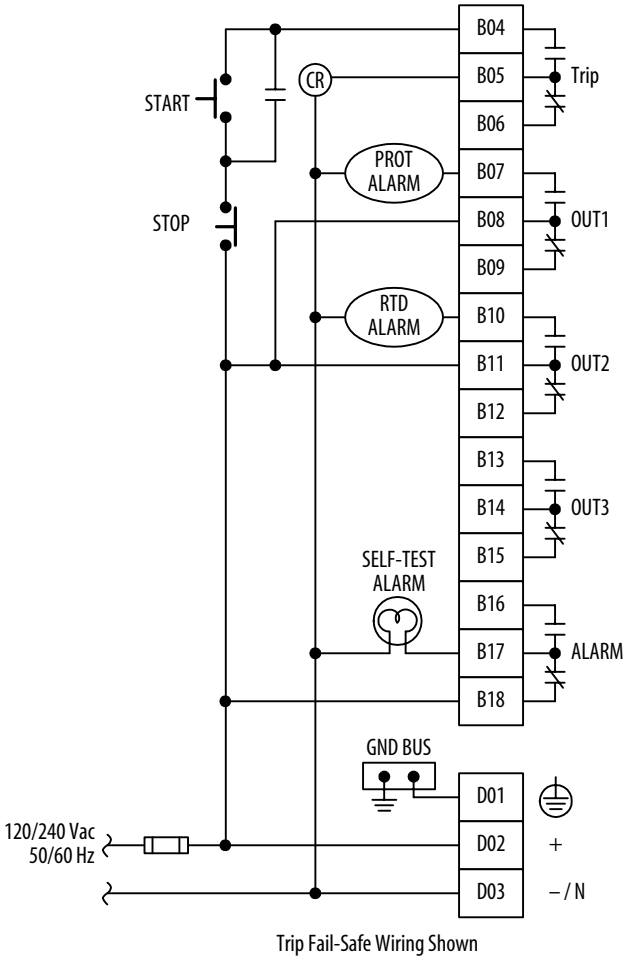

Figure 2.11 Contact Output Factory Default Wiring Diagram.

Figure 2.12 on page 2.15 shows various wiring methods for fail-safe and nonfail-safe wiring to control breakers and contactors.

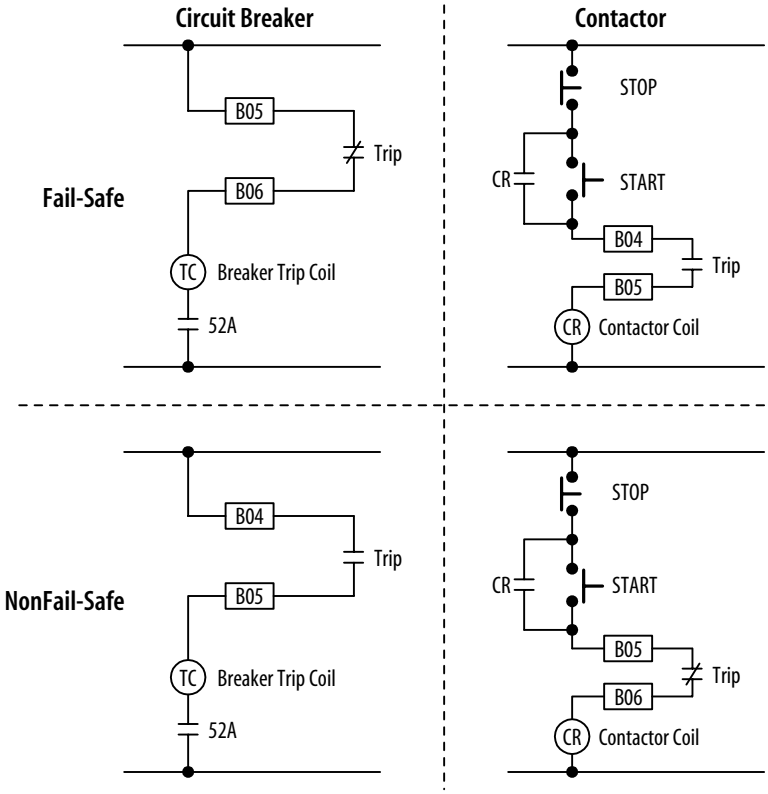

Figure 2.12 Trip Contact Fail-Safe, NonFail-Safe Wiring Options.

The monitor output contacts are fully programmable using the monitor settings described in *Appendix B: SELogic® Control Equations and Monitor Logic*. For many applications, the factory default configuration will provide the desired performance.

The factory configuration for OUT1 provides an alarm for selected protection elements such as the motor thermal element, load loss element, current unbalance element, and power element alarms. The normally open output contact of OUT1 closes if it detects any of these alarm conditions.

The factory configuration for OUT2 provides an alarm for RTD-based functions. The monitor closes the normally open output contact if an RTD alarm temperature is exceeded, if the RTD Bias alarm picks up, if RTD leads short or open, or if the monitor loses communication with the SEL-2600 RTD Module. This output is inactive if the monitor is not equipped with RTD inputs.

Output OUT3 can be used to start the motor using the factory default settings as shown in *Figure 2.13*.

The ALARM normally closed output contact is a fail-safe contact. This contact opens while the monitor is in service and closes when:

- Input power is removed.
- Three incorrect Access Level 2 passwords are entered.
- Successful Access Level 2 admission is achieved.
- The monitor fails.

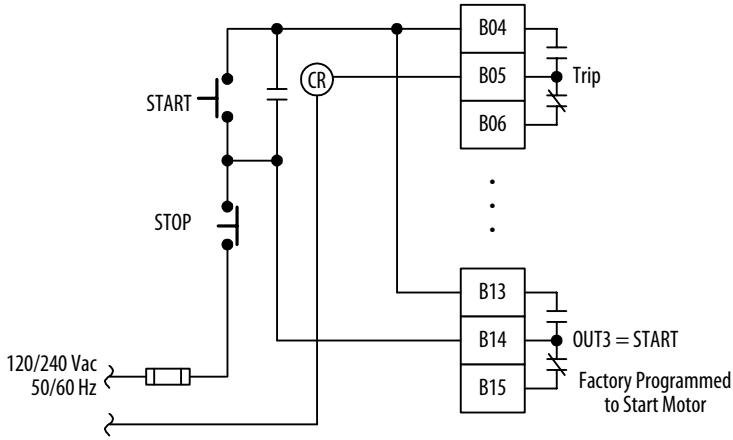

Figure 2.13 Optional Motor Start Wiring Using Factory Default Settings for Output Contact OUT3.

Contact Inputs

The SEL-701-1 Monitor is equipped with six internally wetted contact inputs. The monitor supplies 28 Vdc wetting voltage for each input so you only need to connect a dry contact, switch, or jumper to the input.

CAUTION: Do not connect external voltages to the monitor contact inputs. Because the contact inputs are internally wetted, permanent damage to the monitor or external equipment may result from connecting external voltage to a monitor contact input.

The contact input functions are fully programmable using the monitor settings described in *Appendix B: SELogic® Control Equations and Monitor Logic*. For many applications the factory default configuration, shown in *Figure 2.14 on page 2.17* and described as follows, will provide the desired performance.

- Input IN1 is configured to monitor the motor breaker or contactor 52B contact, if available.

- Input IN2 is configured for direct tripping. When the contact connected to IN2 closes, the monitor will trip to shut down the motor.
- Input IN3 is configured for a speed switch. If you want speed switch tripping, connect the speed switch contact to IN3 or to the contact input on the SEL-2600 RTD Module. See *Speed Switch Tripping on page 3.28 in Section 3: Settings Calculation* for additional information regarding the speed switch tripping function.
- Input IN4 is configured for Access Level 2 control. You can connect a key switch to this input. When the switch contact is closed, you can use monitor Access Level 2 commands to change monitor settings or control output contacts.

NOTE: The monitor does not require that this input be used for Level 2 access. You can also enter the appropriate monitor password using the serial port or front panel to gain entry to Access Level 2. Shorting the IN4 input makes password entry unnecessary; this is useful if the Access Level 2 password is lost.

- Input IN5 is configured to enable an emergency restart. The Emergency Restart function resets the monitor thermal model and overrides all other starting lockout functions to allow an immediate motor start.
- Input IN6 is not applied in the factory default settings.

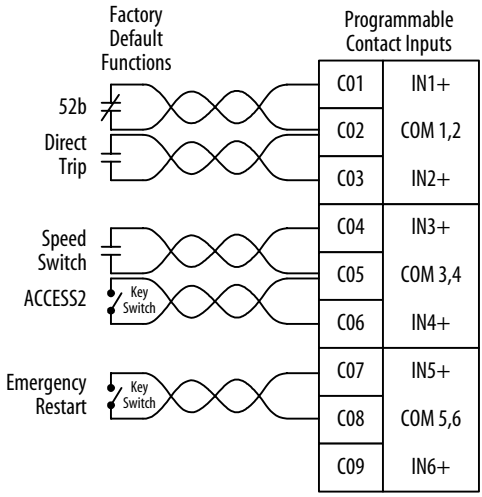

Figure 2.14 Contact Input Factory Default Wiring Diagram.

Analog Output

The SEL-701-1 Monitor single analog output provides a dc current level signal proportional to any one of several monitor measurements. Monitor settings described in *Analog Output Settings on page 3.43 in Section 3: Settings Calculation* allow you to select the analog output range (0 –1 mA, 0 –20 mA, or 4 –20 mA). Connect the monitor output to the input of your PLC or panel meter.

The maximum load for the analog output depends on the selected output range. When you select 0–20 mA or 4–20 mA, the maximum load is 400 ohms. When you select 0–1 mA, the maximum load is 8000 ohms.

Connect the analog output cable shield to ground at terminal B03 (SHLD), or at the PLC or meter location. Do not connect the shield to ground at both locations.

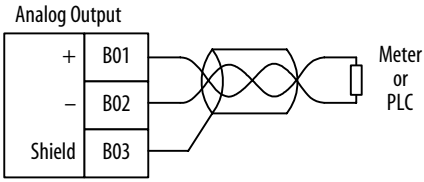

Figure 2.15 Analog Output Wiring.

Internal RTD Connections (Monitor Models 0701110X & 0701111X)

The SEL-701-1 Monitor is available with 11 optional internal RTD inputs.

When the monitor is equipped with internal RTD inputs, you can enter monitor settings that define the type, location, trip, and alarm temperatures for each input individually. RTDs can measure the temperature of the motor stator windings, motor or load bearings, ambient temperature, or other temperatures. The monitor can accurately measure temperature represented by 100-ohm platinum, 100-ohm nickel, 120-ohm nickel, or 10-ohm copper RTDs, but does not support temperature measurement using thermistors or thermocouples.

The monitor supports three-lead RTDs, providing terminals for +, –, and common leads. For best lead-resistance compensation, all three leads should be the same length and wire gauge. Maximum lead resistance is 25 ohms for platinum and nickel RTDs and 3 ohms for copper RTDs

Table 2.1 shows typical maximum RTD lead lengths for various wire gauges. Use shielded cable for the RTD connections, with the shield connected to ground at the monitor. Two shield connection terminals, A01 and A30, are provided for grounding at the monitor. You may also connect shield wires to the common connection terminals, A04, A09, A14, A19, A24, and A29.

Table 2.1 Typical Maximum RTD Lead Length

RTD Lead AWG	Platinum or Nickel RTD	Copper RTD
24	950 ft (290 m)	110 ft (290 m)
22	1500 ft (455 m)	180 ft (54 m)
20	2400 ft (730 m)	290 ft (88 m)
18	3800 ft (1155 m)	450 ft (137 m)

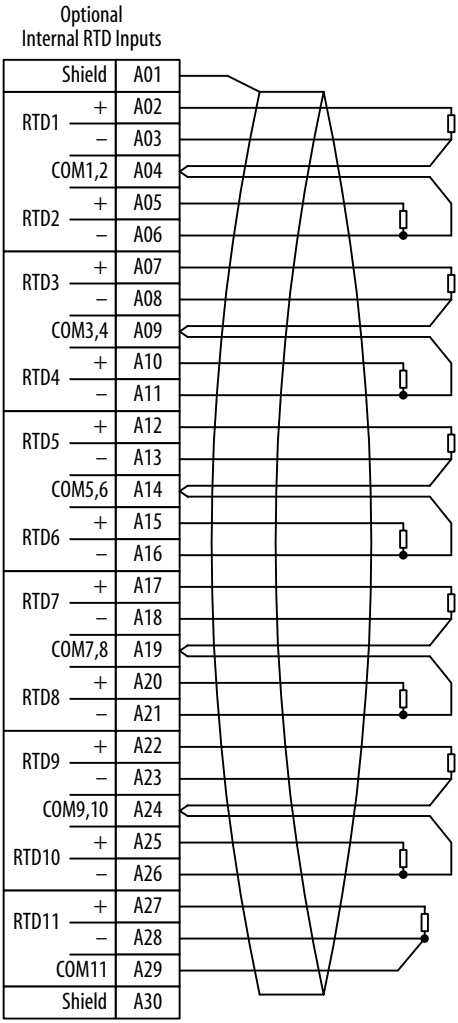

Figure 2.16 RTD Input Wiring.

AC Voltage Connections (Monitor Models 0701101X & 0701111X)

The SEL-701-1 Monitor is available with optional voltage inputs and associated metering, protection, and reporting functions. When your monitor is equipped to measure voltages, you can connect the monitor in any of the following ways:

- Three-phase, four-wire, wye-connected voltages, 0–300 Vac, phase-to-neutral.
- Three-phase, three-wire, open-delta connected voltages, 0–300 Vac, phase-to-phase.
- Single phase-to-neutral, 0–300 Vac.
- Single phase-to-phase, 0–300 Vac.

Refer to *Figure 2.6 on page 2.7* through *Figure 2.9 on page 2.9* for examples of each type of connection.

The connection method shown in *Figure 2.8 on page 2.9* may allow you to use the motor control voltage transformer to supply the phase-to-phase voltage for the monitor. If the control voltage transformer is connected to the bus for the protected motor and the transformer is connected A-B, you can connect the ac control voltage to the monitor voltage inputs, as shown in *Figure 2.8*. Using this connection method, the monitor voltage measurement accuracy is dependent on the control voltage transformer ratio accuracy, regulation, and loading. However, this accuracy may be satisfactory for your application.

NOTE: The SEL-701-1 Monitor calculates system frequency for the over- and underfrequency elements using the A-N or A-B voltage. When single-phase voltage is applied, make sure that either the A-N or A-B voltage is connected to the monitor.

The SEL-701-1 Monitor tracks frequency from 20–70 Hz. In monitor models 0701100X and 0701110X, the monitor tracks frequency using the current waveform, while monitor models 0701101X and 0701111X use the voltage applied to the VA channel to track the frequency.

NOTE: SEL-701-1 Monitors with voltage option will track frequency only if voltage is applied to the monitor.

EIA-232 Communication Cables

The SEL-701-1 Monitor is equipped with 9-pin EIA-232 serial port connectors on the front and rear panels. The front-panel port is always available for connection to a local PC for setting entry or information download. Use SEL Cable C234A (pinout shown in *Connect Your PC to the Monitor on page 5.3 in Section 5: ASCII Serial Port Operation*) or a null-modem cable for direct connection to a local PC serial port.

The rear-panel EIA-232 serial port is available when you disable Modbus® protocol support by monitor settings. You can connect the monitor rear-panel port to a local PC, modem, or SEL-2020/2030 Communications Processor. Fiber-optic cable modems are also available for communication at distances greater than 50 feet (15.2 meters). Use the SEL-5801 Cable SELECTOR software (available for free download at the SEL web site, www.selinc.com) to determine the correct metallic or fiber-optic cable for your particular application. If you prefer to build your own, this software also shows the cable pinout for metallic cables.

EIA-485 Communication Cables

The SEL-701-1 Monitor is equipped with a rear-panel EIA-485 serial port connector which operates using Modbus protocol when you enable that feature by monitor settings. Connect the SEL-701-1 Monitor EIA-485 port to a Modbus Master device as shown in *Figure 2.17 on page 2.23*.

NOTE: When you enable Modbus protocol for the rear-panel serial port, the monitor disables the EIA-232 serial port and enables the EIA-485 serial port.

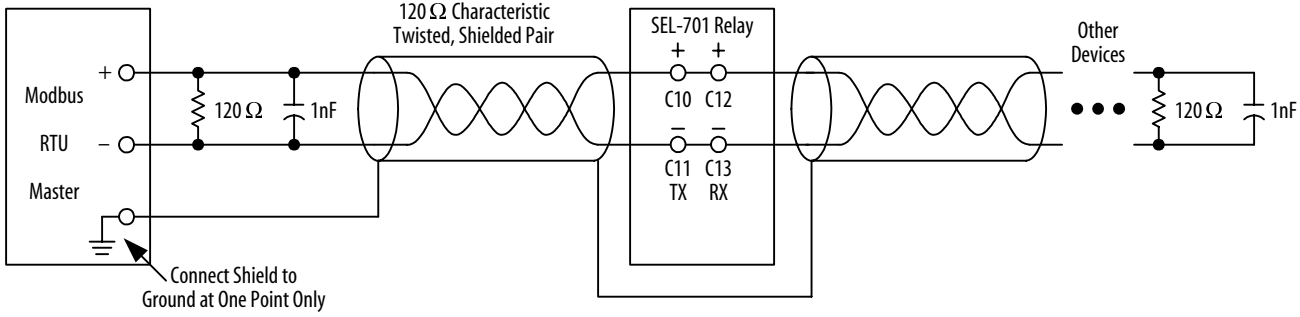

Figure 2.17 Rear-Panel EIA-485 Serial Port Connections.
To minimize reflections in an EIA-485 network, use termination resistors at each end of the line. Also, to ensure that the network will "float" to A logic Level 1 or "high" when all drivers on the EIA-485 network are tristated, bias resistors may be required.

SEL-2600 RTD Module

RTD Connections at the SEL-2600 RTD Module

The SEL-701-1 Monitor is compatible with the SEL-2600 RTD Module that monitors up to 12 RTD inputs and a single contact input. The module uses a fiber-optic cable to communicate temperature measurements and the contact status back to the monitor.

You may connect any of the four supported RTD types to any of the 12 available RTD inputs. The SEL-2600 RTD Module has the same RTD input requirements as the SEL-701-1 Monitor, described in *Internal RTD Connections (Monitor Models 0701110X & 0701111X) on page 2.18*. The module does not require settings.

You can locate the module up to 1600 feet (500 meters) from the monitor, near the protected motor.

Fiber-Optic Connection to SEL-2600 RTD Module

Connect the SEL-2600 RTD Module Fiber-Optic TX port to the SEL-701-1 Monitor Fiber-Optic RX port using an SEL Fiber-Optic Cable C801FD. The maximum cable length allowed is 1600 feet (500 meters).

Section 3

Settings Calculation

Introduction

The SEL-701-1 Monitor protection settings are divided into two major categories. The first category, described in this section, includes settings to configure the motor protection elements and basic functions. The second category, described in *Appendix B: SELogic® Control Equations and Monitor Logic*, includes logic settings that allow you, if you wish, to customize the monitor contact input and output operation. The monitor also includes settings that control the function of the serial ports and the sequential events recorder (SER) function.

NOTE: Each SEL-701-1 Monitor is shipped with default factory settings summarized in *Appendix F: SEL-701-1 Monitor Settings Sheets*. Calculate and enter settings for your motor to ensure that the monitor provides secure, dependable protection.

This instruction manual section includes the following subsections:

Application Data. Lists information that you will need to know about the protected motor before starting to calculate the monitor settings.

General Data. Lists settings that configure the monitor inputs to accurately measure and interpret the ac current and optional voltage input signals.

Basic Motor Protection. Lists settings for protection elements that are included in all models of the SEL-701-1 Monitor, including the thermal element, overcurrent elements, load-loss, and load-jam functions.

RTD-Based Protection. Lists settings associated with the optional internal RTD inputs (Monitor Models 0701110X and 0701111X) or if the monitor will be connected to the SEL-2600 RTD Module. You can skip this subsection if your application does not include RTD measuring.

Voltage-Based Protection (Monitor Models 0701101X & 0701111X). Lists settings associated with the optional ac voltage-based protection elements. You can skip this subsection if your monitor is not equipped with optional voltage inputs.

Output Configuration. Lists settings for the analog output, front-panel display control, LED control, output contact fail-safe function, and additional settings controlling the tripping functions for all monitor models.

Serial Port Settings. Lists settings that configure the monitor front- and rear-panel serial ports.

Sequential Events Recorder (SER) Settings. Lists settings that configure the monitor sequential events recorder (SER) function.

When you calculate the protection element settings to protect your motor, proceed through the subsections listed earlier. Skip the RTD- and voltage-based protection subsections if they do not apply to your specific monitor model or installation. As you calculate the settings, record them using a photocopy of the Settings Sheets found in *Appendix F: SEL-701-1 Monitor Settings Sheets*.

If you record the settings manually, you can enter them using the front-panel Set Monitor function, or the front-panel serial port and the Access Level 2 commands listed below.

Command	Activity
SET	Enter monitor settings
SET R	Enter **SER** function settings
SET P F	Enter settings for the front-panel serial port
SET P R	Enter settings for the rear-panel serial port

Section 4: Front-Panel Operation includes information on using the front-panel interface; *Section 5: ASCII Serial Port Operation* includes details on using the serial port **SET** command.

Application Data

It is quicker and easier for you to calculate settings for the SEL-701-1 Monitor if you collect the following information before you begin:

- Specifications of the protected motor including:
  - Rated full load current.
  - Service factor.
  - Locked rotor current.
  - Maximum locked rotor time with the motor at ambient and/or operating temperature.
  - Maximum motor starts per hour, if known.
  - Minimum time between motor starts, if known.
- Additional data regarding the motor application including:
  - Minimum no load current or power, if known.
  - Motor accelerating time. This is the normal time required for the motor to reach full speed.
  - Maximum time to reach motor full load. This time may be significantly longer than the motor accelerating time, particularly in pump motor applications where the motor may run at full speed for some time before the pump reaches full head and full load.
- Current transformer primary and secondary ratings and connections.
- System phase rotation and nominal frequency.
- Voltage transformer ratios and connections, if used.
- Type and location of resistance temperature devices (RTDs), if used.
- Expected fault current magnitudes for motor or cable ground and three-phase faults.

General Data

Identifier Settings

All models of the SEL-701-1 Monitor have the following identifier settings:

Table 3.1 Identifier Settings

Setting Prompt	Setting Range	Setting Name = Factory Default
Relay Identifier	20 Characters	**RID** = SEL-701-1
Terminal Identifier	20 Characters	**TID = MONITOR**

The SEL-701-1 Monitor prints the Relay and Terminal Identifier strings at the top of responses to serial port commands to identify messages from individual monitors. Enter up to 20 characters, include capital letters A–Z, numbers 0–9, periods (.), dashes (-), and spaces. Suggested identifiers include the location, process, circuit, size, or equipment number of the protected motor.

Current Transformer (CT) Configuration Settings

Table 3.2 CT Configuration Settings

Setting Prompt	Setting Range	Setting Name = Factory Default
Phase (IA, IB, IC) CT Ratio	1–6000 to 1	CTR = 100
Phase CT Secondary Rating	1, 5 A	ITAP = 5
Neutral (IN) CT Ratio	1–6000 to 1	CTRN = 100
Neutral CT Secondary Rating	1, 5 A	INTAP = 5

The CT ratio and secondary rating settings configure the monitor to accurately scale measured values and report the primary quantities. Calculate the phase and neutral CT ratios by dividing the primary rating by the secondary rating.

EXAMPLE 3.1 Phase CT Ratio Setting Calculation

Consider an application where the phase CT ratios are 600:5.

Set CTR = 600/5 = 120.

Set ITAP = 5 A.

Select phase current transformers for your application so that the primary current rating is equal to or greater than the motor full load current. Full load current should not be less than half the CT primary current rating. See *Example 3.1.*

If you connect the IN current input to the secondary of a neutral or ground current transformer as shown in *Figure 2.6 on page 2.7 in Section 2: Installation*, calculate CTRN and INTAP based on the ground CT ratings similar to the phase CT calculations shown in the example above.

If you connect the IN input residually, as shown in *Figure 2.7 on page 2.8 in Section 2: Installation*, set CTRN equal to CTR and INTAP equal to ITAP.

Phase Rotation, Nominal Frequency Settings

Table 3.3 Phase Rotation, Nominal Frequency Settings

Setting Prompt	Setting Range	Setting Name = Factory Default
Phase Rotation	ABC, ACB	PHROT = ABC
Nominal Frequency	50, 60 Hz	FNOM = 60
Date Format	MDY, YMD	DATE_F = MDY
Demand Meter Time Constant	5, 10, 15, 30, 60 min	DMTC = 15

The phase rotation setting tells the monitor your phase labeling standard. Set PHROT equal to ABC when B-phase current lags A-phase current by 120°. Set PHROT equal to ACB when B-phase current leads A-phase current by 120°.

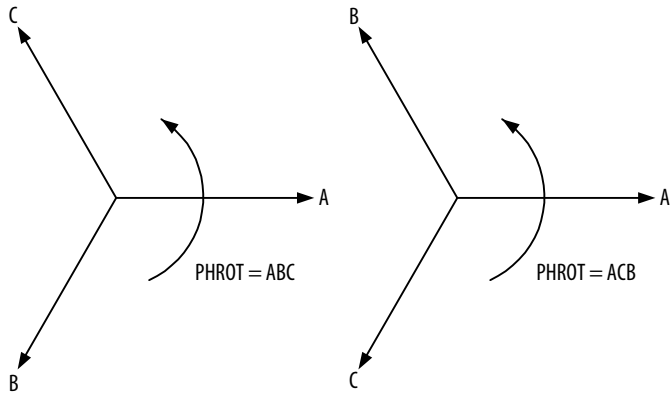

Figure 3.1 Phase Rotation Settings.

Set the FNOM setting equal to your system nominal frequency. The DATE_F setting allows you to change the monitor date presentation format to either North American standard (Month/Day/Year) or engineering standard (Year/Month/Day). The DMTC setting defines the thermal time constant used by the monitor current and power demand meter function, if voltages are included.

Voltage Transformer (VT) Configuration Settings (Monitor Models 0701101X & 0701111X)

Table 3.4 VT Configuration Settings

Setting Prompt	Setting Range	Setting Name = Factory Default
Phase (VA, VB, VC) VT Ratio	1–6000 to 1	PTR = 100
Phase VT Connection	D, Y	DELTA_Y = Y
Single Voltage Input	Y, N	SINGLEV = N

These settings configure the optional monitor voltage inputs to correctly measure and scale the voltage signals. Set the Phase VT Ratio (PTR) setting equal to the VT ratio to 1.

EXAMPLE 3.2 Phase VT Ratio Setting Calculations

Consider a 4160 V motor application where the phase-to-phase connected voltage transformer ratios are 4160:118.

Set PTR = 4160/118 = 35.25 = 35

When phase-to-phase potentials are connected to the monitor, set DELTA_Y equal to D. When phase-to-neutral potentials are connected to the monitor, set DELTA_Y equal to Y.

In applications where only a single voltage is available, set SINGLEV equal to Y. As shown in *Figure 2.8 on page 2.9 in Section 2: Installation* and *Figure 2.9 on page 2.9 in Section 2: Installation*, the single voltage must be connected to the A-phase input, but it may be an A-N or an A-B voltage. Be sure to set DELTA_Y equal to Y for an A-N input or DELTA_Y equal to D for an A-B input voltage.

When you set SINGLEV equal to Y, the monitor performance changes in the following ways:

- **Voltage Elements.** When you use one phase-to-phase voltage, the monitor overvoltage and undervoltage elements use the applied phase-to-phase voltage only. When you use one phase-to-neutral voltage, the monitor voltage elements use the applied phase-to-neutral voltage only.
- **Power Elements.** When you use one voltage, the monitor assumes that the system voltages are balanced in both magnitude and phase angle to calculate apparent, real, and reactive power and the power factor.
- **Metering.** When you use one phase-to-phase voltage, the monitor displays that magnitude and phase angle. When you use one phase-to-neutral voltage, the monitor multiplies that magnitude by the

square-root of three to calculate an approximate phase-to-phase voltage for display. The monitor also adjusts the phase angle of the measured phase-to-neutral voltage by ±30º to represent phase-to-phase voltage. The monitor displays zero for the magnitudes of the unmeasured voltages. Balanced voltages are assumed for power and power factor calculations.

Monitors that are not equipped with phase voltage inputs hide these settings and disable voltage-based protection and metering functions.

Basic Motor Protection

Thermal Model Element

The SEL-701-1 Monitor includes a thermal element that provides integrated protection for all of the following motor operating conditions:

- Locked Rotor Starts.
- Running Overload.
- Unbalance Current/Negative-Sequence Current Heating.
- Repeated or Frequent Starting.

The Setting Method setting selects the thermal element algorithm that will be used in the SEL-701-1 Monitor. The Setting Method setting offers four options: Rating, Generic, User, and OFF.

Rating Setting Method. When selected, the monitor configures a thermal curve based on the motor Full Load Amps, Service Factor, Locked Rotor Amps, Hot and Cold Locked Rotor Time, and Locked Rotor Trip Time Dial settings.

Generic Setting Method. When selected, the monitor offers 45 standard motor thermal limit curves which you can select by curve number.

User Setting Method. When selected, the monitor allows you to build a customized thermal limit curve by directly entering from 5 to 25 time-current points based on your motor's published thermal limit curve.

All three thermal element setting methods can provide outstanding motor protection. In each case the monitor operates a thermal model with a trip value defined by the monitor settings and a present heat estimate that varies with time and changing motor current. The monitor expresses the present motor thermal estimate as a % Thermal Capacity. When the % Thermal Capacity reaches 100%, the monitor trips. You can see the present % Thermal Capacity value using the monitor front panel Meter Values\Thermal & RTD Data function or the serial port **METER T** command.

If the Thermal Model is turned off (SETMETH=OFF), the thermal model is disabled, the output of the thermal model is blocked, and the monitor reports the % Thermal Capacity as either 0 or 999.9% as noted in *Section 7: Metering & Monitoring*. It is recommended that you reset Load Profile, Motor Statistic, Motor Start Trend data and Learned Motor Parameters when the Thermal Model is turned back on. See *Section 4: Front-Panel Operation* and *Section 5: ASCII Serial Port Operation* for the reset procedure.

Thermal Element RATING Setting Method

Table 3.5 Thermal Element Configuration Settings, Setting Method = RATING

Setting Prompt	Setting Range	Setting Name = Factory Default
Setting Method	OFF, Rating, Generic, User	SETMETH = RATING
Full Load Amps	1.00–8.00 A ITAP = 5 A	FLA = 5.00
	0.20–1.60 A[A] ITAP = 1 A	FLA = 1.00
Service Factor	1.00–1.50	SF = 1.15
Locked Rotor Amps	2.50–80.00 A ITAP = 5 A	LRA = 30.00
	0.50–16.00 A[a] ITAP = 1 A	LRA = 6.00
Hot Locked Rotor Time	1.0–200.0 s	LRTHOT = 2.1
Cold Locked Rotor Time	1.0–240.0 s	LRTCOLD = 2.5
Locked Rotor Trip Time Dial	0.10–1.50	TD = 1.00

[A] The range of the Full Load Amps and Locked Rotor Amps settings depends on the ITAP setting as shown.

When you select the RATING thermal element setting method, the monitor requests information on the protected motor capabilities. Obtain all of the requested information except the Locked Rotor Trip Time Dial from the motor specifications.

Occasionally, only one locked rotor time will be specified for a particular motor. Unless the specification states otherwise, assume the time is the cold locked rotor time. Multiply the cold locked rotor time by 0.833 to determine a hot locked rotor time that is acceptable for most motors. If only the hot locked rotor time is specified, multiply that value by 1.2 to determine a cold locked rotor time that is acceptable for most motors.

EXAMPLE 3.3 Thermal Element Rating Method Setting

A 4160 V, 600 HP motor is to be protected using the SEL-701-1 Monitor Thermal Element Rating Method. The motor data sheet includes the following information.

Rated Horsepower (HP) = 600 HP
Rated Voltage (V) = 4160 V
Rated Full Load Current (A) = 76.9 A
Rated Locked Rotor Amps (A) = 462.0 A
Safe Stall Time at 100% Volts

Cold = 21 seconds
Hot = 16 seconds
Service Factor = 1.2

Phase current transformers having 80:5 ratios are selected for the application. The SEL-701-1 Monitor settings for the application are calculated as shown below.

Current Transformer Ratio (CTR) = 80/5 = 16
CT Secondary Rating (ITAP) = 5
Full Load Amps (FLA) = 76.9/16 = 4.81 A secondary
Service Factory (SF) = 1.2
Locked Rotor Amps (LRA) = 462.0/16 = 28.9 A secondary
Hot Locked Rotor Time (LRTHOT) = 16 seconds
Cold Locked Rotor Time (LRTCOLD) = 21 seconds

The Locked Rotor Trip Time Dial setting reduces or extends the allowed accelerating time under locked rotor conditions. You can always safely set this value equal to 1.00. If you know that the driven load will always accelerate in less than the rated locked rotor time, you may wish to use a Locked Rotor Trip Time Dial less than 1.00 to provide a faster trip in locked rotor conditions. Do not set the Locked Rotor Trip Time Dial setting greater than 1.00, except in an emergency to allow a start with a longer than normal accelerating time.

EXAMPLE 3.4 Locked Rotor Trip Time Dial Setting Calculation

In a particular application, a motor with a 10 second hot locked rotor time always starts in 5 seconds.

Setting the Locked Rotor Trip Time Dial setting equal to 0.75 causes the monitor to trip in 7.5 seconds under locked rotor conditions. This setting allows ample time for the motor to start, but does not subject the motor to the full 10 seconds of locked rotor current if a locked rotor start attempt takes place.

Continue calculating the balance of thermal element settings with *Thermal Capacity Alarm Setting on page 3.20*.

Thermal Element GENERIC Setting Method

Table 3.6 Thermal Element Configuration Settings, Setting Method = GENERIC

Setting Prompt	Setting Range	Setting Name = Example Setting
Setting Method	OFF, Rating, Generic, User	SETMETH = GENERIC
Full Load Amps	1.00–8.00 A ITAP = 5 A	FLA = 5.00
	0.20–1.60 A ITAP = 1 A	FLA = 1.00
Service Factor	1.00–1.50	SF = 1.15
Curve Number	1–45	CURVE = 1

For simple, yet thorough motor protection, you may elect to use one of the 45 available standard motor overload/locked rotor curves. Set the motor rated Full Load Amps and Service Factor, then select the desired curve from *Figure 3.2 on page 3.13*. Be sure that the standard curve you select trips in a time less than or equal to the motor rated locked rotor time at locked rotor current. Each increase in the curve number yields a 2.5-second increase in the curve thermal limit time at six times full load current. For a cold motor, the curve 10 trip time at six times full load current is 25 seconds. *Table 3.7 on page 3.14* and *Table 3.8 on page 3.15* show the cold motor thermal limit time versus current for several curves.

Each increase in the curve number yields a 2.1-second increase in the hot motor thermal limit time at six times full load current.

Continue calculating the balance of thermal element settings with *Thermal Capacity Alarm Setting on page 3.20*.

EXAMPLE 3.5 Thermal Element Generic Method Setting

A 4160 V, 800 HP motor is to be protected using the SEL-701-1 Monitor Thermal Element Generic Curve Method. The motor data sheet includes the following information.

Rated Horsepower (HP) = 800 HP
Rated Voltage (V) = 4160 V
Rated Full Load Current (A) = 101.0 A
Rated Locked Rotor Amps (A) = 620.4 A
Safe Stall Time, Hot = 30 seconds
Service Factor = 1.15

Each increase in generic curve number increases the hot motor thermal limit time by 2.1 seconds at six times full load current. Therefore, we can select the maximum curve number using the following equation.

$$\text{Curve} = \frac{\text{Safe Stall Time, Hot (seconds)}}{\text{2.1 seconds}}$$

$$\text{Curve} = 30/2.1 = 14.3\text{; select curve 14 or less}$$

Phase current transformers having 150:5 ratios are selected for the application. The SEL-701-1 Monitor settings for the application are shown below.

Current Transformer Ratio (CTR) = 150/5 = 30
CT Secondary Rating (ITAP) = 5
Full Load Amps (FLA) = 101/30 = 3.36 A secondary
Service Factor (SF) = 1.15
Curve Number (CURVE) = 14

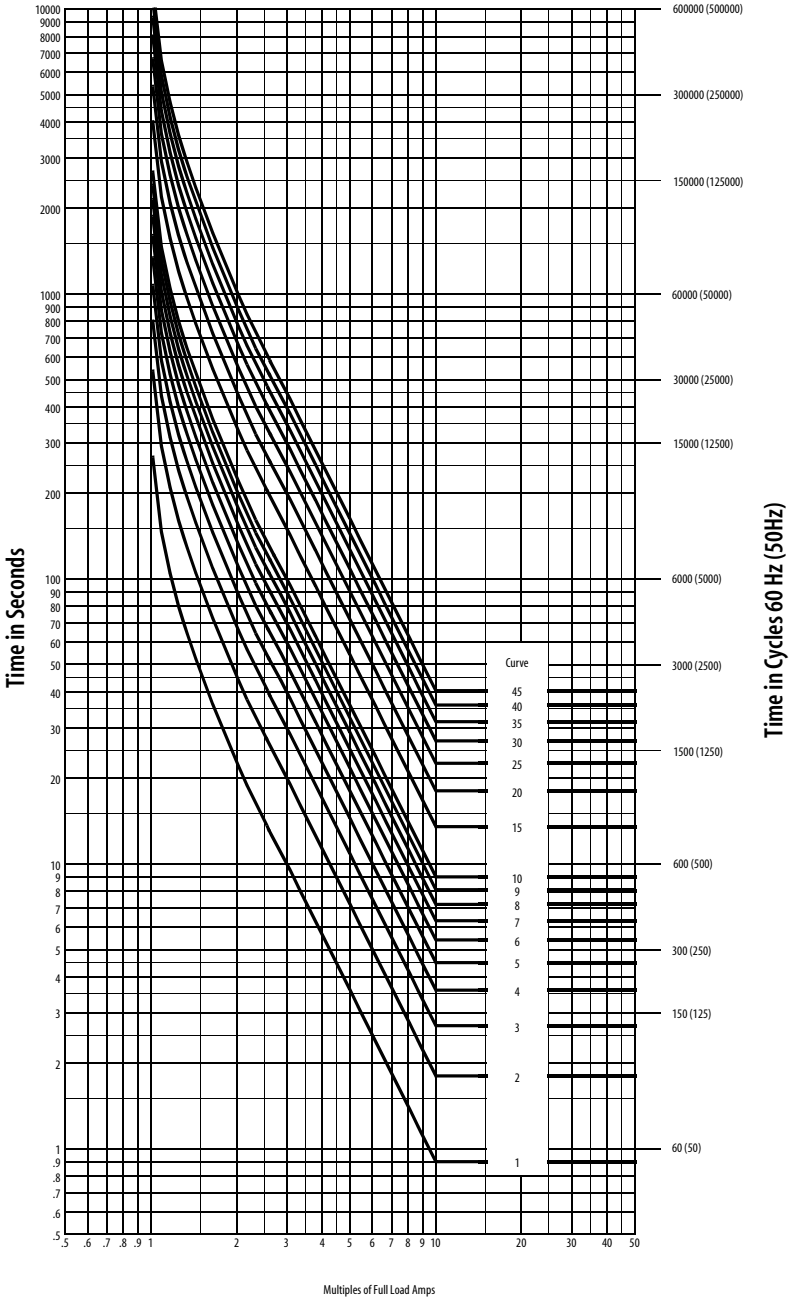

Figure 3.2 Generic Thermal Limit Curves, Cold Motor.

Table 3.7 Generic Thermal Limit Curve Tripping Times From Reset versus Multiples of Full Load Amps, Curves 1–10
(Thermal Limit Times in Seconds)

Multiples of Full Load Amps	Curves									
	1	2	3	4	5	6	7	8	9	10
1.01	311.4	622.7	934.1	1245.4	1556.8	1868.1	2179.5	2490.8	2802.2	3113.6
1.10	138.9	277.7	416.6	555.4	694.3	833.1	972.0	1110.8	1249.7	1388.5
1.15	111.9	223.8	335.7	447.6	559.4	671.3	783.2	895.1	1007.0	1118.9
1.20	94.0	188.0	282.0	376.0	470.0	564.0	658.0	752.0	846.0	940.0
1.30	71.0	142.0	213.1	284.1	355.1	426.1	497.2	568.2	639.2	710.2
1.40	56.6	113.2	169.8	226.4	283.0	339.6	396.2	452.7	509.3	565.9
1.50	46.6	93.2	139.8	186.4	233.0	379.6	326.2	372.8	419.4	466.0
1.70	33.7	67.3	101.0	134.7	168.4	202.0	235.7	269.4	303.0	336.7
2.00	22.8	45.6	68.4	91.2	114.0	136.9	159.7	182.5	205.3	228.1
2.50	14.4	28.8	43.2	57.6	72.0	86.4	100.8	115.2	129.6	144.0
3.00	10.0	20.0	40.0	10.0	50.0	60.0	70.0	80.0	90.0	100.0
3.50	7.3	14.7	22.0	29.4	36.7	44.1	51.4	58.8	66.1	73.5
4.00	5.6	11.2	16.9	22.5	28.1	33.7	39.4	45.0	50.6	56.2
4.50	4.4	8.9	13.3	17.8	22.2	26.7	31.1	35.6	40.0	44.4
5.00	3.6	7.2	10.8	14.4	18.0	21.6	25.2	28.8	32.4	36.0
6.00	2.5	5.0	7.5	10.0	12.5	15.0	17.5	20.0	22.5	25.0
7.00	1.8	3.7	5.5	7.4	9.2	11.0	12.9	14.7	16.5	18.4
8.00	1.4	2.8	4.2	5.6	7.0	8.4	9.8	11.3	12.7	14.1
9.00	1.1	2.2	3.3	4.4	5.5	6.6	7.7	8.8	10.0	11.1
10.00	0.9	1.8	2.7	3.6	4.5	5.4	6.3	7.2	8.1	9.0

Table 3.8 Generic Thermal Limit Curve Tripping Times From Reset versus Multiples of Full Load Amps, Curves 15, 20, 25, 30, 35, 40, 45 *(Thermal Limit Times in Seconds)*

Multiples of Full Load Amps	Curves						
	15	20	25	30	35	40	45
1.01	4670.3	6227.1	7783.9	9340.7	10897.4	12454.2	14011.0
1.10	2082.8	2777.1	3471.3	4165.6	4859.9	5554.1	6248.4
1.15	1678.3	2237.8	2797.2	3356.7	3916.1	4475.6	5035.0
1.20	1410.1	1880.1	2350.1	2820.1	3290.2	3760.2	4230.2
1.30	1065.4	1420.5	1775.6	2130.7	2485.9	2841.0	3196.1
1.40	848.9	1131.9	1414.8	1697.8	1980.8	2263.7	2546.7
1.50	699.1	932.1	1165.1	1398.1	1631.2	1864.2	2097.2
1.70	505.1	673.4	841.8	1010.1	1178.5	1346.8	1515.2
2.00	342.1	456.2	570.2	684.3	798.3	912.4	1026.4
2.50	216.0	288.0	360.0	432.0	504.0	576.0	648.0
3.00	150.0	200.0	250.0	300.0	350.0	400.0	450.0
3.50	110.2	146.9	183.7	220.4	257.1	293.9	330.6
4.00	84.4	112.5	140.6	168.7	196.9	225.0	253.1
4.50	66.7	88.9	111.1	133.3	155.6	177.8	200.0
5.00	54.0	72.0	90.0	108.0	126.0	144.0	162.0
6.00	37.5	50.0	62.5	75.0	87.5	100.0	122.5
7.00	27.6	36.8	45.9	55.1	64.3	73.5	82.7
8.00	21.1	28.1	35.2	42.2	49.2	56.3	63.3
9.00	16.7	22.2	27.8	33.3	38.9	44.4	50.0
10.00	13.5	18.0	22.5	27.0	31.5	36.0	40.5

Thermal Element USER Setting Method

Table 3.9 Thermal Element Configuration Settings, Setting Method = USER

Setting Prompt	Setting Range	Setting Name = Example Setting
Setting Method	OFF, Rating, Generic, User	SETMETH = USER
Full Load Amps	1.00–8.00 A ITAP = 5 A 0.20–1.60 A ITAP = 1 A	FLA = 3.66 FLA = 0.732
Service Factor	1.00–1.50	SF = 1.25
Time to trip at 1.05 o FLA	1.0–6000.0 s, NP	TTT105 = NP
Time to trip at 1.10 o FLA	1.0–6000.0 s, NP	TTT110 = NP
Time to trip at 1.20 o FLA	1.0–6000.0 s, NP	TTT120 = NP
Time to trip at 1.30 o FLA	1.0–6000.0 s, NP	TTT130 = NP
Time to trip at 1.40 o FLA	1.0–6000.0 s, NP	TTT140 = NP
Time to trip at 1.50 o FLA	1.0–6000.0 s, NP	TTT150 = NP
Time to trip at 1.75 o FLA	1.0–6000.0 s, NP	TTT175 = 625.0
Time to trip at 2.00 o FLA	1.0–6000.0 s	TTT200 = 400.0
Time to trip at 2.25 o FLA	1.0–6000.0 s, NP	TTT225 = NP
Time to trip at 2.50 o FLA	1.0–6000.0 s	TTT250 = 225.0
Time to trip at 2.75 o FLA	1.0–6000.0 s, NP	TTT275 = NP
Time to trip at 3.00 o FLA	1.0–6000.0 s, NP	TTT300 = NP
Time to trip at 3.50 o FLA	1.0–6000.0 s, NP	TTT350 = NP
Time to trip at 4.00 o FLA	1.0–6000.0 s, NP	TTT400 = 72.0
Time to trip at 4.50 o FLA	1.0–6000.0 s, NP	TTT450 = 58.0
Time to trip at 5.00 o FLA	1.0–600.0 s, NP	TTT500 = 30.0
Time to trip at 5.50 o FLA	1.0–600.0 s	TTT550 = 25.0
Time to trip at 6.00 o FLA	1.0–600.0 s	TTT600 = 18.1
Time to trip at 6.50 o FLA	1.0–600.0 s	TTT650 = 15.2
Time to trip at 7.00 o FLA	1.0–450.0 s, NP	TTT700 = 13.2
Time to trip at 7.50 o FLA	1.0–400.0 s, NP	TTT750 = NP
Time to trip at 8.00 o FLA	1.0–400.0 s, NP	TTT800 = NP
Time to trip at 8.50 o FLA	1.0–350.0 s, NP	TTT850 = NP

Table 3.9 Thermal Element Configuration Settings, Setting Method = USER

Setting Prompt	Setting Range	Setting Name = Example Setting
Time to trip at 9.00 o FLA	1.0–300.0 s, NP	TTT900 = NP
Time to trip at 10.00 o FLA	1.0–225.0 s, NP	TTT1000 = NP

When the thermal element setting method is set to USER, the monitor allows you to construct a custom motor protection curve using as few as 5 or as many as 25 thermal limit points. The monitor requires:

- The Full Load Amps and Service Factor ratings for the motor.
- Time to Trip settings at 2.00 and 2.50 times Full Load Amps for overload protection.
- Time to Trip settings at 5.50, 6.00, and 6.50 times Full Load Amps for locked rotor protection.

If you wish to emulate a manufacturer's specified thermal limit curve, you may enter additional time points along the curve. If you do not wish to enter a time for a point, enter NP. The monitor automatically creates a smooth thermal limit curve between the entered time points.

Normally, you would use this method only if the motor thermal limit curve includes a discontinuity between the stator limit curve and the locked rotor limit curve, as shown in *Figure 3.3 on page 3.18*.

EXAMPLE 3.6 Thermal Element User Method Setting

A 4000 V, 3000 HP motor is to be protected using the SEL-701-1 Monitor Thermal Element User Method. The motor data sheet includes the following information:

Rated Horsepower (HP) = 3000 HP
Rated Voltage (V) = 4000 V
Rated Full Load Current (A) = 366 A
Rated Locked Rotor Amps (A) = 2380 A
Safe Stall Time at 100% Volts
  Cold = 16 seconds
  Hot = 12 seconds
Service Factor = 1.25

The data sheet also includes the Thermal Limit Curve shown in *Figure 3.3*.

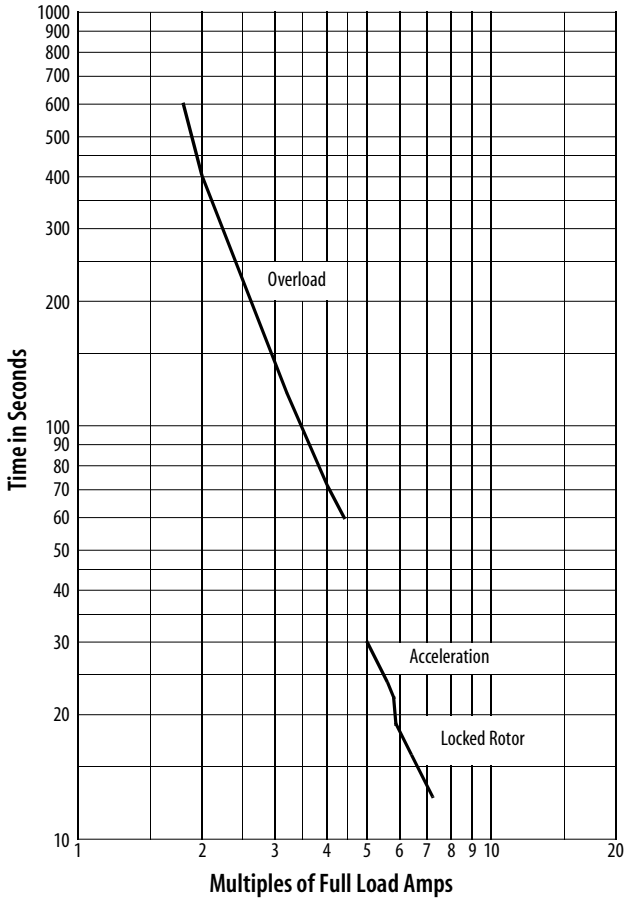

Figure 3.3 3000 HP Example Motor Cold Thermal Limit Curve.

The discontinuities in the thermal limit curve between the Overload, Acceleration, and Locked Rotor curve sections make this motor ideal for protection using a purpose-built thermal limit curve. The User setting method provides the facility to protect this motor.

By examining the curve, we can find the thermal limit times at various multiples of Full Load Current, as listed in *Table 3.10 on page 3.19*. These times map directly to the monitor settings shown below the table.

Table 3.10 3000 HP Motor Thermal Limit Times

Multiples of Full Load Current	Thermal Limit Time (Sec)
1.75	625
2.00	400
2.50	225
4.00	72
4.50	58
5.00	30
5.50	25
6.00	18.1
6.50	15.2
7.00	13.2

Phase current transformers having 500:5 ratios are selected for the application. The SEL-701-1 Monitor settings for the application are calculated as shown below.

Current Transformer Ratio (CTR) = 500/5 = 100
CT Secondary Rating (ITAP) = 5
Full Load Amps (FLA) = 366/100 = 3.66 A secondary
Service Factor (SF) = 1.25
Time to Trip at 1.30 x FLA (TTT130) = NP
Time to Trip at 1.40 x FLA (TTT140) = NP
Time to Trip at 1.50 x FLA (TTT150) = NP
Time to Trip at 1.75 x FLA (TTT175) = 625.0 seconds
Time to Trip at 2.00 x FLA (TTT200) = 400.0 seconds
Time to Trip at 2.25 x FLA (TTT225) = NP
Time to Trip at 2.50 x FLA (TTT250) = 225.0 seconds
Time to Trip at 2.75 x FLA (TTT275) = NP
Time to Trip at 3.00 x FLA (TTT300) = NP
Time to Trip at 3.50 x FLA (TTT350) = NP
Time to Trip at 4.00 x FLA (TTT400) = 72.0 seconds
Time to Trip at 4.50 x FLA (TTT450) = 58.0 seconds
Time to Trip at 5.00 x FLA (TTT500) = 30.0 seconds
Time to Trip at 5.50 x FLA (TTT550) = 25.0 seconds
Time to Trip at 6.00 x FLA (TTT600) = 18.1 seconds
Time to Trip at 6.50 x FLA (TTT650) = 15.2 seconds
Time to Trip at 7.00 x FLA (TTT700) = 13.2 seconds
Time to Trip at 7.50 x FLA (TTT750) = NP
Time to Trip at 8.00 x FLA (TTT800) = NP
Time to Trip at 8.50 x FLA (TTT850) = NP
Time to Trip at 9.00 x FLA (TTT900) = NP
Time to Trip at 10.00 x FLA (TTT1000) = NP

The monitor neither requests settings for thermal limit times less than the service factor nor does it require that all settings have a time entered. You can enter NP for some points and the monitor

automatically builds the thermal limit curve between the nearest two specified points. For instance, the monitor thermal limit characteristic between 2.5 and 4.0 times Full Load Amps forms a continuous curve between 225 seconds and 72 seconds.

Thermal Capacity Alarm Setting

Table 3.11 Thermal Capacity Alarm Setting

Setting Prompt	Setting Range	Setting Name = Factory Default
Thermal Capacity Alarm Pickup	50%–100%	TCAPU = 90

For all thermal element settings methods, the monitor provides a thermal alarm. When the motor thermal capacity used exceeds the Thermal Capacity Alarm Pickup (TCAPU), the monitor issues an alarm. The early alarm may allow you to correct the load problem before a thermal trip occurs.

Thermal Capacity to Start Settings

Table 3.12 Thermal Capacity to Start Settings

Setting Prompt	Setting Range	Setting Name = Factory Default
Thermal Capacity Used To Start	20%–100%	TCSTART = 85
Use Learned Starting Thermal Capacity	Y, N	TCLRNEN = Y

The motor tripping and starting functions include supervision to help prevent a thermal trip on a normal start. The monitor prevents motor starting until the thermal element has enough available thermal capacity to allow a motor start without tripping. The available thermal capacity required to start is (100% – 10% – TCSTART), where the Thermal Capacity Used To Start (TCSTART) setting or the monitor can learn a value.

When you use the Use Learned Starting Thermal Capacity function (TCLRNEN = Y), the monitor records the thermal capacity used during the past five starts and uses it in the thermal model in place of the Thermal Capacity Used to Start setting. The monitor adds 10% to the largest of the last five starting thermal capacities and requires that the motor thermal model cool enough to permit that start.

EXAMPLE 3.7 Learned Starting Thermal Capacity Calculation

Over the past five starts, a motor has used 24%, 27%, 22%, 25%, and 26% of thermal capacity. The largest thermal capacity to start is 27%. The monitor requires that the present thermal capacity drop below 63% (100%–37%) before a new start is allowed.

You can view the present learned thermal capacity to start using the serial port **MOTOR** command or the front-panel Motor Statistics\Average and Peak Data Function (see *Figure 4.29 on page 4.19 in Section 4: Front-Panel Operation*).

Motor Cooling Time Settings

Table 3.13 Motor Cooling Time Settings

Setting Prompt	Setting Range	Setting Name = Factory Default
Motor Stopped Cooling Time	180–72000 s	COOLTIME = 259
Use Learned Cooling Time	Y, N	COOLEN = Y

A stopped motor may take longer to cool than a running motor due to reduced airflow or loss of forced coolant. The factory default settings assume that the motor stopped cooling time is twice the motor running cooling time. Based on the setting names, the equation is:

$$\begin{aligned} \text{COOLTIME} &= 2 \bullet \left[9 \bullet (\text{LRTCOLD} - \text{LRTHOT}) \bullet \left(\frac{\text{LRA}}{\text{FLA}} \right)^2 \right] \\ &= 2 \bullet \left[9 \bullet (2.5 - 2.1) \bullet \left(\frac{30.00}{5.00} \right)^2 \right] \\ &= 259 \text{ s} \end{aligned}$$

Equation 3.1

You can take similar steps to calculate the COOLTIME setting for your application.

Motor running and stopped cooling times or time constants may be provided by the motor manufacturer. If a time constant is provided, multiply that value by 3 to calculate the Motor Stopped Cooling Time (COOLTIME) setting.

When the monitor is monitoring one or more RTDs in the motor windings and an ambient temperature RTD, the monitor can learn the stator cooling time by monitoring the winding temperature when the motor is stopped. If you set Use Learned Cooling Time equal to Y, the monitor learns the cooling time over five stops and uses it in the thermal model in place of the Motor Stopped Cooling Time setting. When you apply the user-defined curve Thermal Element Setting Method (SETMETH = USER), the rotor and stator cooling time constants for the motor may be significantly different. Therefore, Use Learned Cooling Time should be disabled (COOLEN = N) in this case, unless a cooling time or time constant is recommended by the motor manufacturer.

Overcurrent Elements

Table 3.14 Overcurrent Element Settings

Setting Prompt	Setting Range	Setting Name = Factory Default
Level 1 Phase O/C Pickup	OFF, 0.25–100.00 A[A]	50P1P = OFF
Level 1 Phase O/C Time Delay	0.00–400.00 s	50P1D = 0.60
Level 2 Phase O/C Pickup	OFF, 0.25–100.00 A[a]	50P2P = OFF
Level 2 Phase O/C Time Delay	0.00–400.00 s	50P2D = 0.50
Level 1 Residual O/C Pickup	OFF, 0.25–100.00 A[a]	50G1P = OFF
Level 1 Residual O/C Time Delay	0.00–400.00 s	50G1D = 0.60
Level 2 Residual O/C Pickup	OFF, 0.25–100.00 A[a]	50G2P = OFF
Level 2 Residual O/C Time Delay	0.00–400.00 s	50G2D = 0.50
Level 1 Neutral O/C Pickup	OFF, 0.025–10.000 A[B]	50N1P = 0.500
Level 1 Neutral O/C Time Delay	0.00–400.00 s	50N1D = 0.10
Level 2 Neutral O/C Pickup	OFF, 0.025–10.000 A[b]	50N2P = OFF
Level 2 Neutral O/C Time Delay	0.00–400.00 s	50N2D = 0.50
Negative-Seq. O/C Pickup	OFF, 0.25–100.00 A[b]	50QP = OFF
Negative-Seq. O/C Time Delay	0.10–400.00 s	50QD = 0.60

[A] Setting range shown for ITAP = 5 A. Range is 0.05–20.00 A when ITAP = 1 A.

[B] Setting range shown for INTAP = 5 A. Range is 0.005–2.000 A when INTAP = 1 A.

If the SEL-701-1 Monitor is connected to a motor protected by a fused contactor, disable the phase overcurrent elements by setting their pickups to OFF. If the monitor is connected to a device capable of interrupting fault current, use the Level 1 phase overcurrent element to detect and trip for short circuit faults. Set the Level 1 pickup equal to 1.2 to 1.5 times the motor locked rotor current with a 0.10 second time delay. Set the Level 2 pickup equal to 2.0 times the locked rotor current with a 0.00 second time delay.

The monitor offers two types of ground fault detecting overcurrent elements. The neutral overcurrent elements (50N1T and 50N2T) operate using current measured by the IN input. The residual overcurrent elements (50G1T and 50G2T) operate using the sum of the measured phase currents.

When a ground fault CT is connected to the monitor IN input, as in *Figure 2.6 on page 2.7 in Section 2: Installation*, use the Level 1 ground overcurrent element to detect motor ground faults. Calculate the pickup setting based on the available ground fault current and the neutral CT ratio.

EXAMPLE 3.8 Ground Fault CT Application

A resistance-grounded transformer limits the current for motor or cable ground faults. The resistor is sized to limit the current to 10 A primary. The three motor leads are passed through the window of a 10:1 CT. The CT secondary is connected to the SEL-701-1 Monitor 1 A IN current input, as shown in *Figure 3.4*. The monitor IN input measures 1 A for a motor or cable ground fault. Setting the Level 1 Neutral O/C Pickup (50N1P) equal to 0.5 A with 0.10 second time delay ensures that the element will quickly detect and trip for motor ground faults, but prevent misoperation due to unequal breaker or contactor pole closing times.

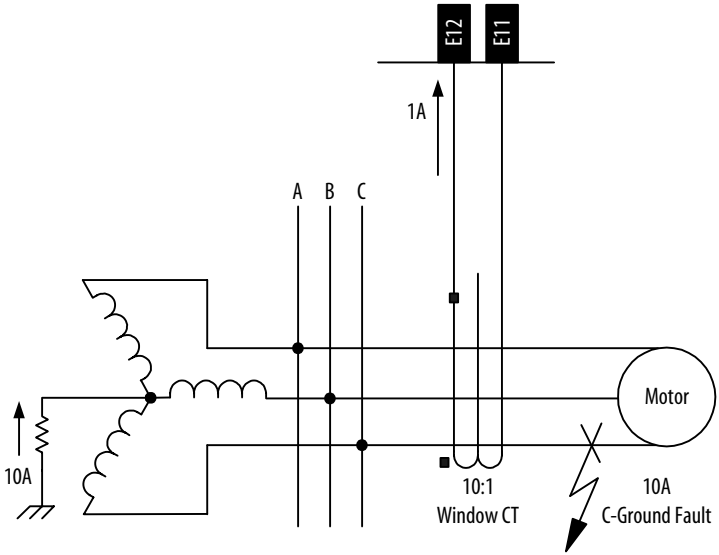

Figure 3.4 Ground Fault Currents Using a Window CT.

When a ground fault CT is not available, either use the 50G residual overcurrent elements or connect the IN input residually, as in *Figure 2.7 on page 2.8 in Section 2: Installation*. Set the Level 1 O/C Pickup between one-half and one-fifth of the full load phase current and set the Level 1 Time Delay equal to 0.2 seconds. Set the Level 2 element more sensitively, but with a longer time delay. The long time delay allows the sensitive Level 2 element to ride through the false residual current that can be caused by phase CT saturation during motor starting.

NOTE: Phase CT ratios are typically higher than ground CT ratios. For this reason, the monitor sensitivity to motor ground faults is less when IN is connected residually than if IN is connected to the secondary winding of an appropriate ground CT. A separate ground fault detection method should be used if a ground CT is not available in applications where resistance grounding reduces available ground fault current.

Use the negative-sequence overcurrent element in addition to or instead of the 46 Current Unbalance Element to detect phase-to-phase faults, single phasing, and heavy motor unbalance. Sensitive unbalance protection is provided by setting the Negative-Seq. O/C Pickup (50QP) equal to 0.1 • ITAP with a 4-second time delay.

Jogging Block Elements

Table 3.15 Jogging Block Element Settings

Setting Prompt	Setting Range	Setting Name = Factory Default
Maximum Number of Starts per Hour	OFF, 1–15	MAXSTART = 3
Minimum Time Between Starts	OFF, 1–150 min	TBSDLY = 20

When the protected motor is rated for a specific maximum number of starts per hour or minimum time between starts, set the MAXSTART and TBSDLY settings accordingly. If the monitor detects MAXSTART starts within 60 minutes and the motor stops or is tripped, the monitor asserts the TRIP output contact to prevent an additional start until 60 minutes after the oldest start. If the motor stops or is tripped within TBSDLY minutes of the last start, the monitor asserts the TRIP output contact to prevent a new start until TBSDLY minutes after the most recent start. The monitor retains accurate start time data (within ±5 seconds) through control power cycles.

The monitor will maintain the trip signal until enough time passes that the motor can be safely restarted. During the lockout period, the monitor will display a countdown time in minutes to the next allowed start if a start is attempted through the monitor. The Emergency Restart function overrides both of these limits allowing the motor to be placed back in service in an emergency.

Load-Jam Elements

Table 3.16 Load-Jam Function Settings

Setting Prompt	Setting Range	Setting Name = Factory Default
Load Jam Trip Pickup	OFF, 0.5–6.0 pu FLA	LJTPU = 2.0
Load Jam Trip Delay	0.00–400.00 s	LJTDLY = 1.00

When the motor is running, the monitor offers load-jam detection. When the motor load jams, stalling the motor, the phase current will increase to near the locked rotor value. When Load Jam Tripping is enabled, if the phase current exceeds the Load Jam Trip Pickup setting for longer than the time delay setting, the monitor will trip. Set the Load Jam Trip Pickup greater than the expected normal load current but less than rated locked rotor current. This setting is entered in per unit of the Full Load Amps (FLA) setting.

Load-Loss Elements

Load-Loss Element, No Voltage Option (Monitor Models 0701100X & 0701110X)

Table 3.17 Load-Loss Element Settings, No Voltage Option

Setting Prompt	Setting Range	Setting Name = Factory Default
Load Loss Alarm Threshold	OFF, 0.10–1.00 pu FLA	LLAPU = OFF
Load Loss Trip Threshold	0.10–1.00 pu FLA	LLTPU = 0.50
Load Loss Starting Time Delay	0–15000 s	LLSDLY = 0
Load Loss Alarm Time Delay	0.00–400.00 s	LLADLY = 5.00
Load Loss Trip Time Delay	0.00–400.00 s	LLTDLY = 10.00

When the monitor is not equipped with optional voltage inputs, the load-loss detection function is dependent on current alone. The monitor arms the load-loss detection logic a settable time after the motor starts, as defined by the Load Loss Starting Time Delay setting. Set this delay to allow pumps or compressors to reach normal load. Once armed, the function issues an alarm or trip if phase current drops below the alarm or trip threshold for the specified time delay.

Set the Load Loss Trip and Alarm thresholds greater than the expected motor no load current but less than the minimum current expected when the motor is operating normally. These settings are entered in per unit of the Full Load Amps (FLA) setting.

If you expect the motor to operate at no load normally, disable this function by setting LLAPU equal to OFF. The monitor automatically hides the remaining load-loss settings.

Load-Loss Element, Voltage Option Included (Monitor Models 0701101X & 0701111X)

Table 3.18 Load-Loss Element Settings, With Voltage Option

Setting Prompt	Setting Range	Setting Name = Factory Default
Load Loss Alarm Threshold	OFF, 30–2000 W[A]	LLAPU = OFF
Load Loss Trip Threshold	30–2000 Wa	LLTPU = 0.50
Load Loss Starting Time Delay	0–15000 s	LLSDLY = 0
Load Loss Alarm Time Delay	0.00–400.00 s	LLADLY = 5.00
Load Loss Trip Time Delay	0.00–400.00 s	LLTDLY = 10.00

[A] Setting range shown for ITAP = 5 A. Range is 6–400 W when ITAP = 1 A

When the monitor is equipped with optional voltage inputs, the load-loss detection function depends on the power used by the motor. The monitor arms the load-loss detection logic a settable time after the motor starts, as defined by the Load Loss Starting Time Delay setting. Set this delay to allow pumps or compressors to reach normal load. Once armed, the function issues an alarm or trip if three-phase power drops below the alarm or trip threshold for the specified time delay. Set the Load Loss Trip and Alarm thresholds greater than the expected motor no load power but less than the minimum power expected when the motor is operating normally.

If you expect the motor to operate at no load normally, disable this function by setting LLAPU equal to OFF. The monitor automatically hides the remaining load-loss settings.

Current Unbalance Elements

Table 3.19 Current Unbalance Element Settings

Setting Prompt	Setting Range	Setting Name = Example Settings
Current Unbalance Alarm Pickup	OFF, 2%–80%	46UBA = 15
Current Unbalance Alarm Delay	0.10–400.00 s	46UBAD = 10.00
Current Unbalance Trip Pickup	OFF, 2%–80%	46UBT = 20
Current Unbalance Trip Delay	0.10–400.00 s	46UBTD = 5.00

Unbalanced motor terminal voltages cause unbalanced stator currents to flow in the motor. The negative-sequence current component of the unbalance current causes significant rotor heating. While the SEL-701-1 Monitor motor thermal element models

the heating effect of the negative-sequence current, many users desire the additional unbalance and single-phasing protection offered by a current unbalance element.

The SEL-701-1 Monitor calculates percent unbalance current in one of two ways depending on the magnitude of the average current. When the average current, Iav, is greater than the motor-rated full load current, the monitor calculates percent unbalance:

$$UB\% = 100\% \bullet \frac{|(Im - Iav)|}{Iav}$$

Equation 3.2

When the average current is less than motor-rated full load current, the monitor calculates percent unbalance:

$$UB\% = 100\% \bullet \frac{|(Im - Iav)|}{FLA}$$

Equation 3.3

where:

UB% = Current unbalance percentage
Im = Magnitude of the phase current with the largest deviation from average
Iav = Magnitude of the average phase current
FLA = Motor-rated full load current

In either case, the function is disabled if the average phase current magnitude is less than 25% of the Full Load Amps setting.

A 1% voltage unbalance typically causes approximately 6% current unbalance in induction motors. If a 2% voltage unbalance can occur in your location, set the current unbalance alarm greater than 12% to prevent nuisance alarms. A 15% current unbalance alarm pickup setting corresponds to approximately 2.5% voltage unbalance and a 20% current unbalance trip setting corresponds to approximately 3.3% voltage unbalance. A 10-second alarm delay and 5-second trip delay should provide adequate performance in most applications.

Phase Reversal Tripping

Table 3.20 Phase Reversal Tripping Setting

Setting Prompt	Setting Range	Setting Name = Factory Default
Enable Phase Reversal Tripping	Y, N	E47T = Y

The SEL-701-1 Monitor uses phase currents or phase voltages (if available) to determine that the phase rotation of signals applied to the monitor matches the phase rotation setting, PHROT. When you set E47T equal to Y, the monitor trips 0.5 seconds after incorrect phase rotation signals are applied to the monitor. For monitors equipped with current inputs only, the trip will occur approximately 0.5 seconds after the motor

start is initiated. When the monitor is equipped with voltage inputs, the trip will occur approximately 0.5 seconds after ac voltages are applied to the monitor.

NOTE: When the monitor is applied with a single voltage input (SINGLEV = Y) phase reversal detection is based on phase current measurement only.

Speed Switch Tripping

Table 3.21 Speed Switch Tripping Time Delay Setting

Setting Prompt	Setting Range	Setting Name = Factory Default
Speed Switch Trip Time Delay	OFF, 0.50–400.00 s	SPDSDLY = OFF

When the motor is equipped with a speed switch, you may wish to provide additional locked rotor protection using the monitor speed switch input. When the Speed Switch Trip Time Delay is set, the monitor will trip if the speed switch is not closed SPDSDLY seconds after the motor start begins. If you wish to use speed switch tripping, connect the speed switch contacts to monitor input IN3 or to the contact input at the SEL-2600 RTD Module. The contact input on the SEL-2600 RTD Module is the Relay Word bit IN7.

NOTE: The SEL-2600 RTD Module updates the state of the RTD measurements and contact input every 0.5 seconds. To account for this update delay, you may wish to set a slightly longer Speed Switch Trip Time Delay when the speed switch contact is monitored by the external module.

To disable speed switch tripping, set the Speed Switch Trip Time Delay equal to OFF.

RTD-Based Protection

When you purchase the SEL-701-1 Monitor with optional RTD inputs, or connect the SEL-2600 RTD Module, the monitor offers several protection and monitoring functions whose settings are described below.

RTD Configuration Settings

Table 3.22 RTD Configuration Settings

Setting Prompt	Setting Range	Setting Name = Factory Default
RTD Input Option	INT[A], EXT, NONE	RTDOPT = NONE
Temperature Preference Setting	C, F	TMPREF = F

[A] INT is only available in Models 0701110X and 0701111X.

The SEL-701-1 Monitor can monitor temperature using RTD inputs in one of two ways:

- Optional internal RTD inputs.
- An SEL-2600 RTD Module.

When RTDs will not be connected to the monitor or to an external module, set the RTD Input Option setting equal to NONE. When RTDs will be connected to internal RTD inputs, set the RTD Input Option setting equal to INT. When monitored RTDs will be connected to the inputs of the external module, set the RTD Input Option setting equal to EXT.

NOTE: SEL-701-1 Monitors equipped with internal RTD inputs may be connected to monitor the RTD inputs of an SEL-2600 RTD Module. The monitor will monitor only those inputs enabled by the RTD Input Option setting. It will not monitor both input sets simultaneously.

The Temperature Preference Setting allows you to configure the RTD temperature trip and alarm settings and temperature reporting functions in your preferred units: degrees Celsius or degrees Fahrenheit.

The monitor automatically hides the Temperature Preference setting and all other settings associated with the RTD inputs if you set RTDOPT equal to NONE.

RTD Location Settings

Table 3.23 RTD Location Settings

Setting Prompt	Setting Range	Setting Name = Factory Default
RTD Location	WDG, BRG, AMB, OTH, NONE	RTD1LOC = BRG
RTD Location	WDG, BRG, AMB, OTH, NONE	RTD2LOC = BRG
RTD Location	WDG, BRG, AMB, OTH, NONE	RTD3LOC = BRG
RTD Location	WDG, BRG, AMB, OTH, NONE	RTD4LOC = BRG
RTD Location	WDG, BRG, AMB, OTH, NONE	RTD5LOC = WDG
RTD Location	WDG, BRG, AMB, OTH, NONE	RTD6LOC = WDG
RTD Location	WDG, BRG, AMB, OTH, NONE	RTD7LOC = WDG
RTD Location	WDG, BRG, AMB, OTH, NONE	RTD8LOC = WDG
RTD Location	WDG, BRG, AMB, OTH, NONE	RTD9LOC = WDG
RTD Location	WDG, BRG, AMB, OTH, NONE	RTD10LOC = WDG
RTD Location	WDG, BRG, AMB, OTH, NONE	RTD11LOC = AMB
RTD Location[A]	WDG, BRG, AMB, OTH, NONE	RTD12LOC = OTH

[A] The twelfth RTD input is only available when you use the SEL-2600 RTD Module.

The monitor allows you to define the location of each monitored RTD independently using the RTD Location settings.

Define the RTD Location settings using the following suggestions:

- If an RTD is not connected to an input or has failed in place and will not be replaced, set RTD Location for that input equal to NONE.
- For RTDs embedded in motor stator windings, set RTD Location equal to WDG.
- For inputs connected to RTDs measuring bearing race temperature, set RTD Location equal to BRG.
- For the input connected to an RTD measuring ambient motor cooling air temperature, set RTD Location equal to AMB. Only one ambient temperature RTD is allowed.
- For inputs connected to monitor temperatures of other apparatus, set RTD Location equal to OTH.

If OTH is selected for the RTD Location, the SEL-701-1 Monitor allows you to enter a 10-character description for the RTD. This description will be used when the

RTD temperature is reported through either the front panel or the communications port (ASCII command **MET T** only).

RTD Type Settings

Table 3.24 RTD Type Settings

Setting Prompt	Setting Range	Setting Name = Factory Default
RTD Type	PT100, NI100, NI120, CU10	RTD1TY = PT100
RTD Type	PT100, NI100, NI120, CU10	RTD2TY = PT100
RTD Type	PT100, NI100, NI120, CU10	RTD3TY = PT100
RTD Type	PT100, NI100, NI120, CU10	RTD4TY = PT100
RTD Type	PT100, NI100, NI120, CU10	RTD5TY = PT100
RTD Type	PT100, NI100, NI120, CU10	RTD6TY = PT100
RTD Type	PT100, NI100, NI120, CU10	RTD7TY = PT100
RTD Type	PT100, NI100, NI120, CU10	RTD8TY = PT100
RTD Type	PT100, NI100, NI120, CU10	RTD9TY = PT100
RTD Type	PT100, NI100, NI120, CU10	RTD10TY = PT100
RTD Type	PT100, NI100, NI120, CU10	RTD11TY = PT100
RTD Type[A]	PT100, NI100, NI120, CU10	RTD12TY = PT100

[A] The twelfth RTD input is only available when you use the SEL-2600 RTD Module.

The monitor allows you to define the type of each monitored RTD independently using the RTD Type settings.

If an RTD Location setting is equal to NONE, the monitor does not request that an RTD Type setting be entered for that input.

The four available RTD types are:

- 100-ohm platinum (PT100)
- 100-ohm nickel (NI100)
- 120-ohm nickel (NI120)
- 10-ohm copper (CU10)

RTD Alarm & Trip Temperatures

Table 3.25 RTD Alarm and Trip Temperatures (Sheet 1 of 2)

Setting Prompt	Setting Range	Setting Name = Factory Default
RTD Trip Temperature	OFF, 32°–482°F	RTD1T = OFF
RTD Alarm Temperature	OFF, 32°–482°F	RTD1A1 = OFF
RTD Alarm Temperature	OFF, 32°–482°F	RTD1A2 = OFF
RTD Alarm Temperature	OFF, 32°–482°F	RTD1A3 = OFF
RTD Trip Temperature	OFF, 32°–482°F	RTD2T = OFF
RTD Alarm Temperature	OFF, 32°–482°F	RTD2A1 = OFF
RTD Alarm Temperature	OFF, 32°–482°F	RTD2A2 = OFF
RTD Alarm Temperature	OFF, 32°–482°F	RTD2A3 = OFF
RTD Trip Temperature	OFF, 32°–482°F	RTD3T = OFF
RTD Alarm Temperature	OFF, 32°–482°F	RTD3A1 = OFF
RTD Alarm Temperature	OFF, 32°–482°F	RTD3A2 = OFF
RTD Alarm Temperature	OFF, 32°–482°F	RTD3A3 = OFF
RTD Trip Temperature	OFF, 32°–482°F	RTD4T = OFF
RTD Alarm Temperature	OFF, 32°–482°F	RTD4A1 = OFF
RTD Alarm Temperature	OFF, 32°–482°F	RTD4A2 = OFF
RTD Alarm Temperature	OFF, 32°–482°F	RTD4A3 = OFF
RTD Trip Temperature	OFF, 32°–482°F	RTD5T = OFF
RTD Alarm Temperature	OFF, 32°–482°F	RTD5A1 = OFF
RTD Alarm Temperature	OFF, 32°–482°F	RTD5A2 = OFF
RTD Alarm Temperature	OFF, 32°–482°F	RTD5A3 = OFF
RTD Trip Temperature	OFF, 32°–482°F	RTD6T = OFF
RTD Alarm Temperature	OFF, 32°–482°F	RTD6A1 = OFF
RTD Alarm Temperature	OFF, 32°–482°F	RTD6A2 = OFF
RTD Alarm Temperature	OFF, 32°–482°F	RTD6A3 = OFF
RTD Trip Temperature	OFF, 32°–482°F	RTD7T = OFF
RTD Alarm Temperature	OFF, 32°–482°F	RTD7A1 = OFF
RTD Alarm Temperature	OFF, 32°–482°F	RTD7A2 = OFF
RTD Alarm Temperature	OFF, 32°–482°F	RTD7A3 = OFF
RTD Trip Temperature	OFF, 32°–482°F	RTD8T = OFF

Table 3.25 RTD Alarm and Trip Temperatures (Sheet 2 of 2)

Setting Prompt	Setting Range	Setting Name = Factory Default
RTD Alarm Temperature	OFF, 32°–482°F	RTD8A1 = OFF
RTD Alarm Temperature	OFF, 32°–482°F	RTD8A2 = OFF
RTD Alarm Temperature	OFF, 32°–482°F	RTD8A3 = OFF
RTD Trip Temperature	OFF, 32°–482°F	RTD9T = OFF
RTD Alarm Temperature	OFF, 32°–482°F	RTD9A1 = OFF
RTD Alarm Temperature	OFF, 32°–482°F	RTD9A2 = OFF
RTD Alarm Temperature	OFF, 32°–482°F	RTD9A3 = OFF
RTD Trip Temperature	OFF, 32°–482°F	RTD10T = OFF
RTD Alarm Temperature	OFF, 32°–482°F	RTD10A1 = OFF
RTD Alarm Temperature	OFF, 32°–482°F	RTD10A2 = OFF
RTD Alarm Temperature	OFF, 32°–482°F	RTD10A3 = OFF
RTD Trip Temperature	OFF, 32°–482°F	RTD11T = OFF
RTD Alarm Temperature	OFF, 32°–482°F	RTD11A1 = OFF
RTD Alarm Temperature	OFF, 32°–482°F	RTD11A2 = OFF
RTD Alarm Temperature	OFF, 32°–482°F	RTD11A3 = OFF
RTD Trip Temperature[A]	OFF, 32°–482°F	RTD12T = OFF
RTD Alarm Temperature	OFF, 32°–482°F	RTD12A1 = OFF
RTD Alarm Temperature	OFF, 32°–482°F	RTD12A2 = OFF
RTD Alarm Temperature	OFF, 32°–482°F	RTD12A3 = OFF
Enable Winding Trip Voting	Y, N	EWDGV = N
Enable Bearing Trip Voting	Y, N	EBRGV = N
Enable RTD Biasing	Y, N	RTDBEN = Y

[A] The twelfth RTD input is only available when you use the SEL–2600 RTD Module.

The SEL-701-1 Monitor provides temperature alarms and trips using the RTD temperature measurements and the alarm and trip temperature settings in *Table 3.25*. The temperature setting range is dependent on the Temperature Preference setting so you can enter your alarm and trip temperatures in degrees Celsius or degrees Fahrenheit.

The monitor issues a winding temperature alarm if any of the healthy winding RTDs (RTD Location setting equals WDG) indicate a temperature greater than its RTD Alarm Temperature settings. The monitor issues a winding temperature trip if one or two of the healthy winding RTDs indicate a temperature greater than their RTD Trip

Temperature settings. Two winding RTDs must indicate excessive temperature when the Enable Winding Trip Voting setting equals Y. Only one excessive temperature indication is required if Winding Trip Voting is not enabled. Bearing Trip Voting works similarly.

The alarm and trip temperature settings for Bearing, Ambient, and Other RTD types function similarly except that trip voting is not available for Ambient and Other RTDs. There is one trip temperature setpoint and three alarm temperature setpoints for each RTD.

To disable any of the temperature alarm or trip functions, set the appropriate temperature setting to OFF.

Only healthy RTDs can contribute temperatures to the alarm and trip functions. The monitor includes specific logic to indicate if RTD, leads are shorted or open.

When you have connected an ambient temperature sensing RTD and set trip temperatures for one or more winding RTDs, the monitor gives you the option to enable RTD thermal model biasing. When you enable RTD biasing, the monitor:

- Calculates RTD % Thermal Capacity and adds the value to the Thermal Meter values.
- Automatically reduces the winding RTD trip temperatures and thermal element trip threshold if ambient temperature rises above 40°C.
- Provides an RTD Bias Alarm if the winding temperature exceeds 60°C rise over ambient and the RTD % Thermal Capacity exceeds the thermal element % Thermal Capacity by more than 10%.

The monitor calculates RTD % Thermal Capacity using *Equation 3.4*:

$$\text{RTD\% Thermal Capacity} = \frac{\text{Winding RTD Temperature} - \left(\text{Ambient Temperature}\right)}{\text{Winding RTD Trip Temperature} - \left(\text{Ambient Temperature}\right)} \bullet 100\%$$

Equation 3.4

As ambient temperature rises, the motor's ability to shed heat to the surroundings is reduced and internal temperatures rise. To preserve insulation life, NEMA standards suggest a 1°C reduction in RTD trip temperature for each 1°C rise in ambient temperature over 40°C. When you enable RTD biasing, the SEL-701-1 Monitor automatically reduces the RTD trip temperatures for all winding RTDs when ambient temperature is above 40°C. The monitor reduces the trip temperatures by 1°C for each degree rise in ambient temperature over 40°C.

Finally, when you enable RTD biasing, the monitor provides an RTD Bias Alarm when the RTD % Thermal Capacity exceeds the thermal element % Thermal Capacity by more than 10 percentage points while the winding temperature rise is higher than 60°C over ambient. This alarm can be a useful indicator that the motor has lost coolant flow or that the winding RTD trip temperature is conservatively low.

For all the RTD thermal capacity and bias calculations described above, the monitor uses the winding RTD whose measured temperature is closest to its trip value.

Table 3.26 lists the RTD resistance versus temperature for the four supported RTD types.

Table 3.26 RTD Resistance versus Temperature

Temp (°F)	Temp(°C)	100 Platinum	120Nickel	100Nickel	10 Copper
-58	-50.00	80.31	86.17	74.30	7.10
-40	-40.00	84.27	92.76	79.10	7.49
-22	-30.00	88.22	99.41	84.20	7.88
-4	-20.00	92.16	106.15	89.30	8.26
14	-10.00	96.09	113.00	94.60	8.65
32	0.00	100.00	120.00	100.00	9.04
50	10.00	103.90	127.17	105.60	9.42
68	20.00	107.79	134.52	111.20	9.81
86	30.00	111.67	142.06	117.10	10.19
104	40.00	115.54	149.79	123.00	10.58
122	50.00	119.39	157.74	129.10	10.97
140	60.00	123.34	165.90	135.30	11.35
158	70.00	127.07	174.25	141.70	11.74
176	80.00	130.89	182.84	148.30	12.12
194	90.00	134.70	191.64	154.90	12.51
212	100.00	138.50	200.64	161.80	12.90
230	110.00	142.29	209.85	168.80	13.28
248	120.00	146.06	219.29	176.00	13.67
266	130.00	149.82	228.96	183.30	14.06
284	140.00	153.58	238.85	190.90	14.44
302	150.00	157.32	248.95	198.70	14.83
320	160.00	161.04	259.30	206.60	15.22
338	170.00	164.76	269.91	214.80	15.61
356	180.00	168.47	280.77	223.20	16.00
374	190.00	172.46	291.96	231.80	16.39
392	200.00	175.84	303.46	240.70	16.78
410	210.00	179.15	315.31	249.80	17.17
428	220.00	183.17	327.54	259.20	17.56
446	230.00	186.82	340.14	268.90	17.95
464	240.00	190.45	353.14	278.90	18.34
482	250.00	194.08	366.53	289.10	18.73

Voltage-Based Protection (Monitor Models 0701101X & 0701111X)

When you purchase the SEL-701-1 Monitor with optional voltage inputs, the monitor enables a number of additional protection functions. The settings for these functions are described below.

Under- & Overvoltage Elements

Phase-to-Phase Under- & Overvoltage Elements

Table 3.27 Under- and Overvoltage Settings, Phase-to-Phase Potentials

Setting Prompt	Setting Range	Setting Name = Factory Default
Level 1 Phase-phase U/V Pickup	OFF, 1–300 V	27P1P = 40
Level 2 Phase-phase U/V Pickup	OFF, 1–300 V	27P2P = OFF
Level 1 Phase-phase O/V Pickup	OFF, 1–300 V	59P1P = 73
Level 2 Phase-phase O/V Pickup	OFF, 1–300 V	59P2P = OFF

When you connect the SEL-701-1 Monitor voltage inputs to phase-to-phase connected VTs, as in *Figure 2.7 on page 2.8 in Section 2: Installation* or *Figure 2.8 on page 2.9 in Section 2: Installation*, the monitor provides two levels of phase-to-phase overvoltage and undervoltage elements. You may use these elements for tripping, alarming, or supervision of other conditions through the monitor programmable logic described in *Appendix B: SELogic® Control Equations and Monitor Logic*. To disable any of these elements, set the pickup settings equal to OFF. The default 27P1P setting provides undervoltage supervision for the underpower, reactive power, and power factor tripping elements.

Phase-to-Neutral Under- & Overvoltage Elements

Table 3.28 Under- and Overvoltage Settings, Phase-to-Neutral Potentials

Setting Prompt	Setting Range	Setting Name = Factory Default
Level 1 Phase U/V Pickup	OFF, 1–300 V	27P1P = 40
Level 2 Phase U/V Pickup	OFF, 1–300 V	27P2P = OFF
Level 1 Phase O/V Pickup	OFF, 1–300 V	59P1P = 73
Level 2 Phase O/V Pickup	OFF, 1–300 V	59P2P = OFF
Residual O/V Pickup	OFF, 1–300 V	59GP = OFF

When you connect the SEL-701-1 Monitor voltage inputs to phase-to-neutral connected VTs, as in *Figure 2.6 on page 2.7 in Section 2: Installation* or *Figure 2.9 on page 2.9 in Section 2: Installation*, the monitor provides two levels of phase-to-neutral overvoltage and undervoltage elements, plus a residual overvoltage element. The residual overvoltage element operates using the phasor sum of the three phase voltages and is hidden and disabled if only a single phase-to-neutral VT is connected to the monitor. You may use these elements for tripping, alarming, or supervision of other conditions through the monitor programmable logic described in *Appendix B: SELogic® Control Equations and Monitor Logic*. To disable any of these elements, set the pickup settings equal to OFF. The default 27P1P setting provides undervoltage supervision for the underpower, reactive power, and power factor tripping elements.

Reactive Power (VAR) Elements

Table 3.29 Reactive Power Element Settings

Setting Prompt	Setting Range	Setting Name = Factory Default
Negative VAR Alarm Pickup	OFF, 30–2000 VAR[A]	NVARAP = OFF
Positive VAR Alarm Pickup	30–2000 VAR	PVARAP = 2000
VAR Alarm Time Delay	0.00–400.00 s	VARAD = 0.00
Negative VAR Trip Pickup	OFF, 30–2000 VAR[a]	NVARTP = OFF
Positive VAR Trip Pickup	30–2000 VAR[a]	PVARTP = 2000
VAR Trip Time Delay	0.00–400.00 s	VARTD = 0.00
VAR Element Arming Delay	0–15000 s	VARDLY = 10

[A] Setting range shown for ITAP = 5 A. Range is 6–400 VAR when ITAP = 1 A.

When you apply the SEL-701-1 Monitor on a synchronous motor, the VAR Element Arming Delay disarms the reactive power elements for a settable time after the motor starts. This allows the motor to be brought to full speed and the field applied. After the VAR Element Arming Delay expires, the VAR Alarm and VAR Trip elements are enabled. If the positive or negative reactive power exceeds the appropriate threshold for longer than the time delay setting, the monitor can issue an alarm or trip signal. The reactive power elements are disabled when the motor is stopped or starting. These elements can be used to detect synchronous motor out-of-step or loss-of-field conditions.

Refer to *Figure 7.1 on page 7.6 in Section 7: Metering & Monitoring* for the monitor power measurement convention.

For application on an induction motor, disable the elements by setting both the Negative VAR Alarm Pickup and Negative VAR Trip Pickup settings to OFF.

Underpower Elements

Table 3.30 Underpower Element Settings

Setting Prompt	Setting Range	Setting Name = Factory Default
Phase Underpower Alarm Pickup	OFF, 30–2000 W[A]	37PAP = OFF
Phase Underpower Alarm Time Delay	0.00–400.00 s	37PAD = 0.00
Phase Underpower Trip Pickup	OFF, 30–2000 W[a]	37PTP = OFF
Phase Underpower Trip Time Delay	0.00–400.00 s	37PTD = 0.00
Underpower Element Arming Delay	0–15000 s	37DLY = 10

[A] Setting range shown for ITAP = 5 A. Range is 6–400 W when ITAP = 1 A.

The SEL-701-1 Monitor Underpower Element Arming Delay disarms the underpower elements for a settable time after the motor starts. This allows the motor to be brought to full load. After the Underpower Element Arming Delay expires, the Phase Underpower Alarm and Phase Underpower Trip elements are enabled. If the real three-phase power falls below the alarm or trip threshold for longer than the time delay setting, the monitor can issue an alarm or trip signal. The underpower elements are disabled when the motor is stopped or starting. These elements operate in addition to the Load Loss function and you can use them to detect motor load loss and other underpower conditions.

Disable the elements by setting both the Phase Underpower Alarm Pickup and Phase Underpower Trip Pickup settings to OFF.

Power Factor Elements

Table 3.31 Power Factor Element Settings

Setting Prompt	Setting Range	Setting Name = Factory Default
Power Factor Alarm Leading Pickup	OFF, 0.05–0.99	55LDAP = OFF
Power Factor Alarm Lagging Pickup	0.05–0.99	55LGAP = 0.05
Power Factor Alarm Time Delay	0.00–400.00 s	55AD = 2.50
Power Factor Trip Leading Pickup	OFF, 0.05–0.99	55LDTP = OFF
Power Factor Trip Lagging Pickup	0.05–0.99	55LGTP = 0.05
Power Factor Trip Time Delay	0.00–400.00 s	55TD = 5.00
Power Factor Element Arming Delay	0–15000 s	55DLY = 10

When you apply the SEL-701-1 Monitor on a synchronous motor, the Power Factor Element Arming Delay disarms the power factor elements for a settable time after the motor starts. This allows the motor to be brought to full speed and the field applied. After the Power Factor Element Arming Delay expires, the Power Factor Alarm and Power Factor Trip elements are enabled. If the measured power factor falls below the leading or lagging threshold for longer than the time delay setting, the monitor can issue an alarm or trip signal. The power factor elements are disabled when the motor is stopped or starting. These elements can be used to detect synchronous motor out-of-step or loss-of-field conditions.

Refer to *Figure 7.1 on page 7.6 in Section 7: Metering & Monitoring* for the monitor power measurement convention.

For application on an induction motor, disable the elements by setting both the Power Factor Alarm Leading Pickup and Power Factor Trip Leading Pickup settings to OFF.

Frequency Elements

Table 3.32 Frequency Element Settings

Setting Prompt	Setting Range	Setting Name = Factory Default
Level 1 Pickup	OFF, 20.00–70.00 Hz	81D1P = 59.10
Level 1 Time Delay	0.03–400.00 s	81D1D = 0.03
Level 2 Pickup	OFF, 20.00–70.00 Hz	81D2P = OFF
Level 2 Time Delay	0.03–400.00 s	81D2D = 0.03
Level 3 Pickup	OFF, 20.00–70.00 Hz	81D3P = OFF
Level 3 Time Delay	0.03–400.00 s	81D3D = 0.03

The SEL-701-1 Monitor provides three over- or underfrequency elements with independent pickup and time-delay settings. When an element pickup setting is less than the Nominal Frequency setting, the element operates as an underfrequency element. When the pickup setting is greater than the Nominal Frequency setting, the element operates as an overfrequency element.

The monitor measures system frequency for these elements using the A-phase voltage. All three elements are disabled if the applied ac voltage magnitude drops below 20 V.

Output Configuration

Analog Output Settings

Table 3.33 Analog Output Settings

Setting Prompt	Setting Range	Setting Name = Factory Default
Analog Output Signal Type	0–1mA, 0–20mA, 4–20mA	AOSIG = 4–20mA
Analog Output Parameter	%LOAD_I—Percentage of Full Load Current %THERM—Percentage Thermal Capacity WDG_RTD—Hottest Winding RTD Temperature BRG_RTD—Hottest Bearing RTD Temperature AVG_I—Average Phase Current MAX_I—Maximum Phase Current	AOPARM = %LOAD_I
Analog Output Full Scale Current	0.5–80.0 A ITAP = 5 A 0.1–16.0 A ITAP = 1 A	AOFSC = 5.0

The SEL-701-1 Monitor provides a dc analog current output with three signal ranges and a variety of output parameters. Set the Analog Output Signal Type to select the operating range of dc output current. Select the Analog Output Parameter from the list of available options.

When you select a percentage-type output parameter, the monitor automatically scales the output to indicate full scale at 100%. If you select a hottest RTD output parameter, the monitor automatically scales the output to indicate full scale at 250°C or 482°F and zero scale at 0°C or 32°F. If you select average or maximum phase current output parameters, the monitor requests that you enter your preferred Analog Output Full Scale Current in secondary amps. The range available depends on whether your nominal secondary current is 5 A or 1 A. The Analog Output Full Scale Current setting is hidden when the Analog Output Parameter is not AVG_I or MAX_I.

Front-Panel Configuration Settings

Table 3.34 Front-Panel Configuration Settings

Setting Prompt	Setting Range	Setting Name = Factory Default
Front Panel Power Display	Y, N	FP_KW = N
Front Panel RTD Display	Y, N	FP_RTD = N
Front Panel Timeout	0–30 min	FP_TO = 15
Front Panel Display Brightness	25%, 50%, 75%, 100%	FPBRITE = 50

The monitor default front-panel display shows measured phase currents and, if included, phase-to-phase voltage. When the monitor is equipped with voltage inputs, the Front-Panel Power Display setting gives you the option to add power quantities to the front-panel default display. When Front-Panel Power Display is equal to Y, the monitor displays measured kW, horsepower, kVAR, kVA, power factor, and frequency. When the monitor is equipped with internal or external RTD inputs and the Front Panel RTD Display setting equals Y, the monitor displays the temperatures of the hottest winding, bearing, and other RTDs, plus the ambient temperature.

Use the Front-Panel Timeout setting as a security measure. If the front-panel interface is inactive for this length of time, the monitor automatically blacks out the front-panel display. This function preserves the life of the vacuum fluorescent display. If the display is within an Access Level 2 function such as monitor setting entry, the function is automatically terminated without saving changes. If you prefer to disable the front-panel timeout function during monitor testing, set Front-Panel Timeout equal to 0 minutes. Do not leave the front-panel timeout setting at 0 minutes while the monitor is in service.

The Front-Panel Display Brightness setting adjusts the intensity of the vacuum fluorescent display. If the display dims over a period of years or if the monitor will be installed in a brightly lit location, you may wish to increase the Front-Panel Display Brightness setting.

Front-Panel Display Message Settiings

Table 3.35 Display Message Settings

Setting Prompt	Setting Range	Setting Name = Factory Default
Display Messages	20 characters; enter NA to NULL	DM1_1 = SEL-701-1 DM1_0 = DM2_1 = MONITOR DM2_0 = DM3_1 = RTD FAILURE DM3_0 = DM4_1 = DM4_0 = DM5_1 = DM5_0 = DM6_1 = DM6_0 =

The Display Messages function allows you to monitor a total of 6 logic conditions and display up to 12 different messages, depending on the state of the monitored conditions. When the monitored logic condition is true (logical 1), the monitor displays the message entered as the DMn_1 setting in the default display rotation. When the monitored condition is false (logical 0), the monitor displays the message entered as the DMn_0 setting in the display rotation.

Display messages are useful for indicating the state of monitor contact inputs. Message text can include capital letters A–Z, numbers 0–9, spaces, periods (.), and dashes (-). Type ‘NA’ to clear a message setting.

Appendix B: SELogic® Control Equations and Monitor Logic describes the logic used to control display messages.

LED Logic Settings

Table 3.36 LED Logic Settings

Setting Prompt	Setting Range	Setting Name = Factory Default
Use Factory LED Settings	Y, N	FACTLED = Y

The SEL-701-1 Monitor includes factory logic that controls the LED operation. Factory Logic LEDs flash to indicate an alarm condition and are on steady to indicate the cause of the latest trip. The function that alarmed or tripped is indicated by the text to the right of each LED. If you wish to change the logic that controls each LED, set Use Factory LED Settings to N. (Use Factory LED Settings is hidden if FACTLOG setting is Y.) The monitor will present additional logic settings (LED1–LED7) that you can modify to customize the monitor operation. *Figure 3.5* shows the corresponding LED for each of the LED settings (LED1–LED7). *Appendix B: SELogic® Control Equations and Monitor Logic* describes powerful, flexible logic that allows you to customize the operation of each LED.

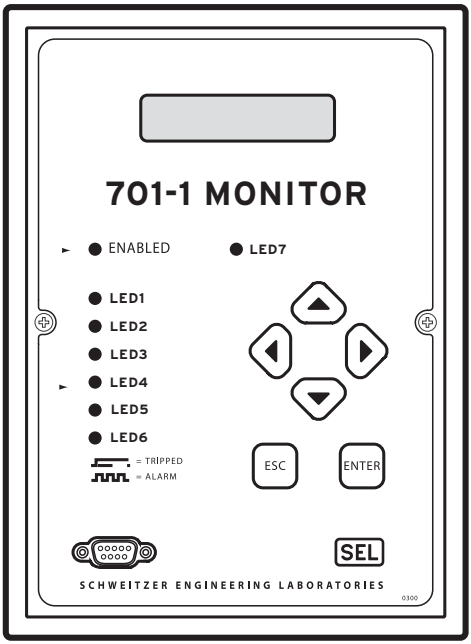

Figure 3.5 SEL-701-1 Monitor LED Locations

Output Contact Fail-Safe, Trip Duration, & Starting Lockout Settings

Table 3.37 Output Contact Fail-Safe and Trip Duration Settings

Setting Prompt	Setting Range	Setting Name = Factory Default
Enable TRIP Contact Failsafe	Y, N	TRFS = Y
Enable OUT1 Contact Failsafe	Y, N	OUT1FS = N
Enable OUT2 Contact Failsafe	Y, N	OUT2FS = N
Enable OUT3 Contact Failsafe	Y, N	OUT3FS = N
Minimum Trip Duration Time	0.00–400.00 s	TDURD = 0.50

The SEL-701-1 Monitor allows you to enable fail-safe output contact operation for monitor contacts on an individual basis. When contact fail-safe is enabled, the monitor output contact is held in its energized position when monitor control power is applied and falls to its deenergized position when control power is removed. Output contact deenergized positions are indicated on the monitor chassis and in *Figure 2.11 on page 2.14 in Section 2: Installation*.

When TRIP Contact Failsafe is enabled and the TRIP output contact is appropriately connected to the motor breaker or contactor, the motor is automatically tripped when monitor control power fails. This setting/connection philosophy is appropriate if the protected motor is more valuable than the process that the motor supports. In critical applications where the protected motor is not more valuable than the process, you may want the motor to run even if the monitor is out of service. In this case, disable TRIP Contact Failsafe by selecting N.

The Minimum Trip Duration Time is the minimum amount of time that the monitor trip signal will last in the event of a fault. Set this time at least as long as your motor breaker operate time or your motor contactor dropout time. In the event of a thermal element trip or a trip caused by the starts per hour limit or minimum time between starts function, the trip signal will remain until the motor thermal estimate has cooled or time has passed to permit another start.

Antibackspin Setting

Table 3.38 Antibackspin Setting

Setting Prompt	Setting Range	Setting Name = Factory Default
Antibackspin Starting Delay	0–60 min	ABSDLY = 0

In certain pump applications, fluid flowing backward through the pump may spin the pump motor for a short time after the motor is stopped. It is dangerous to attempt to start the motor during this time. To prevent motor starts during the backspin period, enter a time in minutes in the Antibackspin Starting Delay setting. If the monitor trips or the motor is stopped, the monitor will generate a trip signal and maintain it for at least this amount of time. The monitor will not issue a start during the antibackspin period.

The Emergency Restart function overrides the Antibackspin function allowing the motor to be placed back in service in an emergency.

Factory Logic Settings

Table 3.39 Factory Logic Settings

Setting Prompt	Setting Range	Setting Name = Factory Default
Use Factory Logic Settings	Y, N	FACTLOG = Y

The SEL-701-1 Monitor includes factory logic settings that generate trip and alarm outputs for the protection elements shown in *Figure 3.6 on page 3.49* through *Figure 3.9 on page 3.51*. The elements shown in *Figure 3.6 on page 3.49* and *Figure 3.7 on page 3.50* only cause a trip or alarm if you have enabled them through settings described throughout this section. If the tripping, alarm, and control input logic shown in *Figure 3.6 on page 3.49* through *Figure 3.9 on page 3.51* are acceptable for your application, set Use Factory Logic Settings equal to Y.

Appendix B: SELogic® Control Equations and Monitor Logic describes powerful, flexible logic that allows you to customize the tripping, input, and output contact performance. If you wish to change the performance shown in *Figure 3.6 on page 3.49* through *Figure 3.9 on page 3.51*, set Use Factory Logic Settings equal to N. The monitor will present additional logic settings that you can modify to customize the monitor performance for your application.

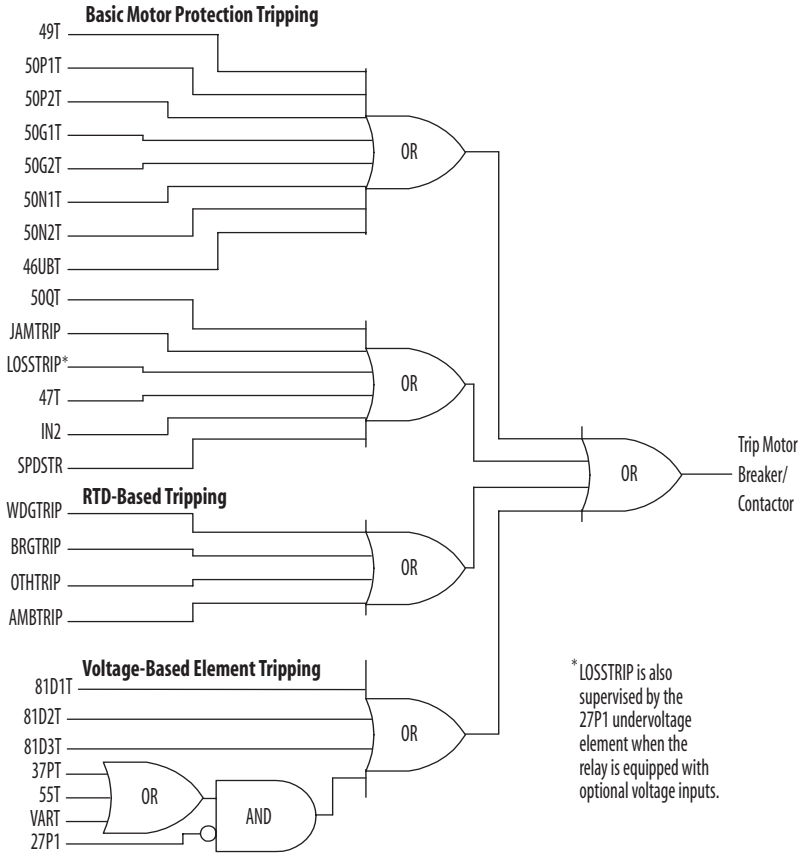

Basic Motor Protection Tripping

49T = Thermal Element Trip
50P1T = Level 1 Definite-Time Phase O/C Element Trip
50P2T = Level 2 Definite-Time Phase O/C Element Trip
50G1T = Level 1 Definite-Time Residual O/C Element Trip
50G2T = Level 2 Definite-Time Residual O/C Element Trip
50N1T = Level 1 Definite-Time Neutral O/C Element Trip
50N2T = Level 2 Definite-Time Neutral O/C Element Trip
46UBT = Current Unbalance Element Trip
50QT = Negative-Sequence Overcurrent Trip
JAMTRIP = Load Jam Trip
LOSSTRIP = Load Loss Trip
47T = Phase Reversal Trip
IN2 = Direct Trip Contact Input
SPDSTR = Speed Switch Trip

RTD-Based Tripping

WDGTRIP = Winding Temperature Trip
BRGTRIP = Bearing Temperature Trip
OTHTRIP = Other Temperature Trip
AMBTRIP = Ambient Temperature Trip

Voltage-Based Element Tripping

81D1T = Level 1 Over-/Underfrequency Trip
81D2T = Level 2 Over-/Underfrequency Trip
81D3T = Level 3 Over-/Underfrenqency Trip
37PT = Underpower Element Trip
55T = Power Factor Element Trip
VART = Reactive Power Element Trip
27P1 = Undervoltage Element

Figure 3.6 Factory Tripping Logic.

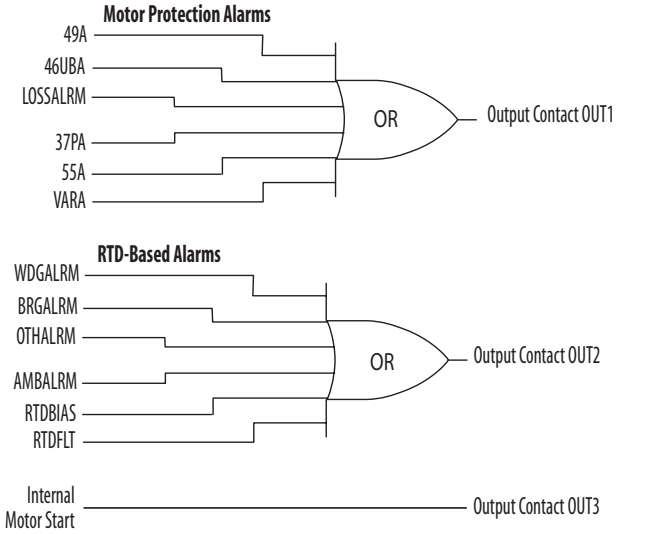

Motor Protection Alarms

49A = Thermal Element Alarm
46UBA = Current Unbalance Alarm
LOSSALRM = Load Loss Alarm
37PA = Underpower Element Alarm
55A = Power Factor Element Alarm
VARA = Reactive Power Element Alarm

RTD-Based Alarms

WDGALRM = Winding RTD Temperature Alarm
BRGALRM = Bearing RTD Temperature Alarm
OTHALRM = Other RTD Temperture Alarm
AMBALRM = Ambient RTD Temperture Alarm
RTDBIAS = RTD Bias Alarm
RTDFLT = RTD Fault Alarm

Figure 3.7 Factory Contact Output Logic.

Figure 3.8 Factory Contact Input Logic.

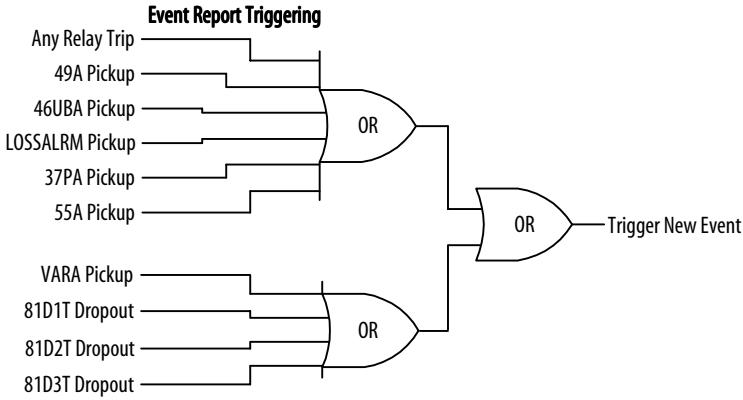

Event Report Triggering

49A = Thermal Element Alarm
46UBA = Current Unbalance Alarm
LOSSALRM = Load Loss Alarm
37PA = Underpower Element Alarm
55A = Power Factor Element Alarm
VARA = Reactive Power Element Alarm
81D1T = Level 1 Over-/Underfrequency Trip
81D2T = Level 2 Over-/Underfrequency Trip
81D3T = Level 3 Over-/Underfrequency Trip

Figure 3.9 Factory Event Triggering Logic.

Serial Port Settings

The SEL-701-1 Monitor provides settings that allow you to configure the communication parameters for the front- and rear-panel serial ports. The front-panel serial port only supports ASCII communications described in detail in *Section 5: ASCII Serial Port Operation*. The rear-panel serial port settings include the Protocol setting. When you set the rear-panel serial port Protocol setting equal to ASCII, the monitor supports ASCII commands at the rear-panel EIA-232 port. When you set the rear-panel serial port Protocol setting equal to MOD, the monitor supports Modbus® RTU protocol at the rear-panel EIA-485 port and disables the rear-panel EIA-232 port.

The SEL-701-1 Monitor front-panel serial port supports EIA-232 communication of ASCII text data and SEL Binary commands and responses. The rear panel is equipped with EIA-232 and EIA-485 serial port connectors. *Table 3.40* shows monitor serial port settings for the front-panel port and the rear-panel port when it is set to use ASCII protocol. Set the Baud Rate, Data Bits, Parity, and Stop Bits settings to match the serial port configuration of the equipment that is communicating with the serial port.

Table 3.40 SET P Serial Port Settings, Protocol = ASCII

Setting Prompt	Setting Range	Setting Name = Factory Default
Protocol, (shown for rear port only)	ASCII, MOD	PROTO = ASCII
Baud Rate	300–19200	SPEED = 2400
Data Bits	7, 8	BITS = 8
Parity	O, E, N	PARITY = N
Stop Bits	1, 2	STOP = 1
Timeout	0–30 min	T_OUT = 15
Send Auto Messages to Port	Y, N	AUTO = N
Enable Hardware Handshaking	Y, N	RTSCTS = N
Fast Operate Enable	Y, N	FASTOP = N

After Timeout minutes of inactivity on a serial port at Access Level 2, the port automatically returns to Access Level 1. This security feature helps prevent unauthorized access to the monitor settings if the monitor is accidentally left in Access Level 2. If you do not want the port to time out, set Timeout equal to 0 minutes.

If you would like the monitor to automatically send text messages to devices connected to the EIA-232 serial port in response to faults and self-test warnings or failures, set Send Auto Messages to Port setting equal to Y. If the serial port will not normally be connected to any device while the monitor is in service, set Send Auto Messages to Port setting equal to N.

The monitor EIA-232 serial ports support software (XON/XOFF) flow control. If you wish to enable support for hardware (RTS/CTS) flow control, set the Enable Hardware Handshaking setting equal to Y.

The SEL-701-1 Monitor can accept binary commands to operate output contacts, set and clear logic conditions, or start and stop the motor when the Fast Operate Enable setting equals Y. This is a particularly useful function when the monitor is connected to an SEL Communications Processor. These binary Fast Operate commands are described in *Appendix D: SEL-2020/SEL-2030 Compatibility Features*.

Table 3.41 SET P Rear-Panel Serial Port Settings, Protocol = MOD

Setting Prompt	Setting Range	Setting Name = Factory Default
Protocol	ASCII, MOD	PROTO = MOD
Baud Rate	300–19200	SPEED = 2400
Parity	O, E, N	PARITY = N
Modbus Slave ID	1–247	SLAVEID = 1

The SEL-701-1 Monitor rear-panel serial port supports Modbus RTU protocol when the Protocol setting equals MOD. Define the Baud Rate and Parity settings to match the requirements of the Modbus master connected to the monitor. The Modbus Slave ID must be set with a numeric address that is different from the Slave IDs of the other devices on the Modbus network.

Sequential Events Recorder (SER) Settings

The SEL-701-1 Monitor processes ac and dc inputs four times per power system cycle. During every processing interval, it updates the state of each protection element and logic function. The details of this activity are described in *Appendix B: SELogic® Control Equations and Monitor Logic*. The Sequential Events Recorder (SER) function operates by monitoring a user-defined subset of the protection element results, contact input states, and contact output states. When any of the monitored elements changes state, the monitor adds a record to the SER memory. Each record includes the date and time of the state change, the name or alias of the monitored element, and the element's final state. The monitor stores the 512 latest records sequentially in nonvolatile memory. You can view the stored information using a PC connected to the front- or rear-panel serial ports.

This instruction manual subsection outlines the SER function settings. The SER settings include settings which trigger entries into the event record and alias settings that allow you to customize the way the recorded data is displayed. *Section 8: Event Analysis* describes the format and contents of the SER reports.

SER Trigger Settings

The SEL-701-1 Monitor SER function provides four list settings to define the conditions that add records to the SER memory: SER1, SER2, SER3, and SER4. You can set the monitor to monitor up to 96 conditions. Each list can contain up to 24 items. Each item must be the name of a Relay Word bit whose definitions are shown in *Table B.4 on page B.18 in Appendix B: SELogic® Control Equations and Monitor Logic*. The factory default SER settings are shown in *Table 3.42*.

Table 3.42 SET R SER Trigger Settings

Setting Prompt	Setting Range	Setting Name = Factory Default
SER1	24 Relay Word bits, separated by commas. Use NA to disable setting.	SER1 = IN1, IN2, IN3, IN4, IN5, IN6, IN7
SER2	24 Relay Word bits, separated by commas. Use NA to disable setting.	SER2 = STARTING, RUNNING, STOPPED, JAMTRIP, LOSSALRM, LOSSTRIP, 46UBA, 46UBT, 49A, 49T, 47T, SPEEDSW, SPDSTR, TRIP, OUT1, OUT2, OUT3, 50G1T, 50G2T, 50N1T, 50N2T

Table 3.42 SET R SER Trigger Settings

Setting Prompt	Setting Range	Setting Name = Factory Default
SER3	24 Relay Word bits, separated by commas. Use NA to disable setting.	SER3 = RTDFLT, WDGALRM, WDGTRIP, BRGALRM, BRGTRIP, AMBALRM, AMBTRIP, OTHALRM, OTHTRIP, 81D1T, 81D2T, 81D3T, TRGTR, START, 50P1T, 50P2T
SER4	24 Relay Word bits, separated by commas. Use NA to disable setting.	SER4 = NA

For convenience, and because you may not need to make any changes to the factory default settings above, the definitions of the Relay Word bits used in the factory default SER settings are shown in *Table 3.43*.

Table 3.43 Default SER Trigger Setting Relay Word Bits Definitions

Relay Word Bits	Relay Word Bit Definitions
IN1, IN2, IN3, IN4, IN5, IN6, IN7	Represent the state of contact inputs IN1–IN7, respectively. Assert (Logical 1) when the input detects that the contact connected to it is closed. Contact input IN7 is located on the SEL-2600 RTD Module.
STARTING, RUNNING, STOPPED	Represent the states of the protected motor.
JAMTRIP	Load Jam Trip. Asserts when the monitor trips in response to a load jam condition, as defined by that function. This Relay Word bit is inactive if the load jam function is disabled.
LOSSALRM, LOSSTRIP	Load Loss Alarm and Load Loss Trip. Assert when the monitor issues an alarm or trip in response to a load loss condition, as defined by that function. These Relay Word bits are inactive if the load loss function is disabled.
46UBA, 46UBT	Phase Current Unbalance Alarm (46UBA) and Trip (46UBT). Assert when the monitor issues an alarm or trip in response to a current unbalance condition, as defined by that function. These Relay Word bits are inactive if the current unbalance function is disabled.
49A, 49T	Thermal Alarm and Trip. Assert when the monitor issues a thermal element alarm or trip due to locked rotor or running overload conditions.
47T	Phase Reversal Trip. Asserts when the monitor detects a phase reversal condition if phase reversal tripping is enabled by the monitor settings.
SPEEDSW, SPDSTR	Speed Switch Input and Trip. SPEEDSW asserts when the speed switch input is asserted. SPDSTR asserts when the monitor does not detect a speed switch contact closure within a settable time from the beginning of a motor start if the function is enabled by the monitor settings.
TRIP, OUT1, OUT2, OUT3	Represent the states of the contact outputs.
50G1T, 50G2T, 50N1T, 50N2T	Ground Fault. Assert when the monitor issues a ground fault trip due to pickup and timeout of a residual (50G1T or 50G2T, sum of phase current inputs) or neutral (50N1T or 50N2T, IN current input) definite-time overcurrent element.

Table 3.43 Default SER Trigger Setting Relay Word Bits Definitions

Relay Word Bits	Relay Word Bit Definitions
RTDFLT	RTD Fault. Asserts when any enabled RTD is short- or open-circuited, connected with reversed polarity, or if communication with the external RTD module is interrupted. This Relay Word bit is inactive if RTD monitoring is disabled.
WDGALRM, WDGTRIP	Winding RTD Temperature Alarm or Trip. WDGALRM asserts when any healthy motor winding RTD temperature exceeds its settable alarm threshold. WDGTRIP asserts when any one or two healthy motor winding RTD temperatures exceed their settable trip thresholds. Both Relay Word bits are inactive if RTD monitoring is disabled or if no winding RTDs are connected.
BRGALRM, BRGTRIP	Bearing RTD Temperature Alarm or Trip. BRGALRM asserts when any healthy motor bearing RTD temperature exceeds its settable alarm threshold. BRGTRIP asserts when any one or two healthy motor bearing RTD temperatures exceed their settable trip thresholds. Both Relay Word bits are inactive if RTD monitoring is disabled or if no bearing RTDs are connected.
AMBALRM, AMBTRIP	Ambient RTD Temperature Alarm or Trip. AMBALRM asserts when the healthy ambient RTD temperature exceeds its settable alarm threshold. AMBTRIP asserts when the healthy ambient RTD temperature exceeds its settable trip threshold. Both Relay Word bits are inactive if RTD monitoring is disabled or if no ambient temperature RTD is connected.
OTHALRM, OTHTRIP	Other RTD Temperature Alarm or Trip. OTHALRM asserts when any healthy "Other" RTD temperature exceeds its settable alarm threshold. OTHTRIP asserts when any one or two healthy "Other" RTD temperatures exceed their settable trip thresholds. Both Relay Word bits are inactive if RTD monitoring is disabled or if no "Other" RTDs are connected.
81D1T, 81D2T, 81D3T	Level 1, Level 2, and Level 3 Time-Delayed Over-/Underfrequency. 81DnT asserts when an over- or underfrequency (depending on the pickup setting) has been detected for the duration of the time-delay setting. All three Relay Word bits are inactive if the monitor is not equipped with optional voltage inputs.
START	Motor Start. Asserts when an internal monitor function calls for a motor start. A motor start will only occur if a monitor output contact is programmed and connected to close the contactor or motor circuit breaker.

Table 3.43 Default SER Trigger Setting Relay Word Bits Definitions

Relay Word Bits	Relay Word Bit Definitions
50P1T, 50P2T	Phase Fault. Assert when the monitor issues a phase fault trip due to pickup and timeout of a phase definite-time overcurrent element.

SER Alias Settings

Table 3.44 SET R SER Enable Alias Settings

Setting Prompt	Setting Range	Setting Name = Factory Default
Enable ALIAS Settings (N, 1–20)	N, 1–20	EALIAS = 17

To simplify your review of the information displayed in the SER record, the monitor provides the Alias setting function. Using the Alias settings, you can change the way monitor elements listed in the SER settings above are displayed in the SER report. In addition, the Alias settings allow you to change the text displayed when a particular element is asserted and deasserted. The monitor permits up to 20 unique aliases, as defined by the Enable Alias Settings (EALIAS) setting. Factory default alias settings are shown in *Table 3.45*.

Define the enabled alias settings by entering the Relay Word bit name, a space, the desired alias, a space, the text to display when the condition asserts, a space, and the text to display when the condition deasserts.

```
ALIAS1 = STARTING MOTOR_STARTING BEGINS ENDS
```

See *Table B.1 on page B.4 in Appendix B: SELogic® Control Equations and Monitor Logic* for the complete list of Relay Word bits. Use up to 15 characters to define the alias, asserted text, and deasserted text strings. You can use capital letters (A–Z), numbers (0–9), and the underscore character (_) within each string. Do not attempt to use a space within a string because the monitor will interpret a space as the break between two strings. If you wish to clear a string, simply type ‘NA’.

Table 3.45 SET R SER Alias Settings

Setting Prompt	RW Bit	Alias	Asserted Text	Deasserted Text
ALIAS1 =	STARTING	MOTOR_STARTING	BEGINS	ENDS
ALIAS2 =	RUNNING	MOTOR_RUNNING	BEGINS	ENDS
ALIAS3 =	STOPPED	MOTOR_STOPPED	BEGINS	ENDS
ALIAS4 =	JAMTRIP	LOAD_JAM_TRIP	PICKUP	DROPOUT
ALIAS5 =	LOSSTRIP	LOAD_LOSS_TRIP	PICKUP	DROPOUT
ALIAS6 =	LOSSALRM	LOAD_LOSS_ALARM	PICKUP	DROPOUT
ALIAS7 =	46UBA	UNBALNC_I_ALARM	PICKUP	DROPOUT
ALIAS8 =	46UBT	UNBALNC_I_TRIP	PICKUP	DROPOUT
ALIAS9 =	49A	THERMAL_ALARM	PICKUP	DROPOUT
ALIAS10 =	49T	THERMAL_TRIP	PICKUP	DROPOUT
ALIAS11 =	47T	PHS_REVRSL_TRIP	PICKUP	DROPOUT
ALIAS12 =	SPDSTR	SPEED_SW_TRIP	PICKUP	DROPOUT
ALIAS13 =	IN2	DIRECT_TRIP_IN	PICKUP	DROPOUT
ALIAS14 =	SPEEDSW	SPEED_SW_IN	PICKUP	DROPOUT
ALIAS15 =	IN5	EMERGNCY_RSTART	PICKUP	DROPOUT
ALIAS16 =	IN1	MOTOR_BREAKER	OPEN	CLOSED
ALIAS17 =	IN4	ACCESS2	ALLOWED	PASSWORD _ONLY
ALIAS18 =	0			
ALIAS19 =	0			
ALIAS20 =	0			

This page intentionally left blank

Section 4

Front-Panel Operation

Front-Panel Layout

The SEL-701-1 Monitor front-panel interface consists of LEDs, a vacuum fluorescent display, a six-button keypad, and an EIA-232 serial port connector. The front-panel layout is shown in *Figure 4.1*.

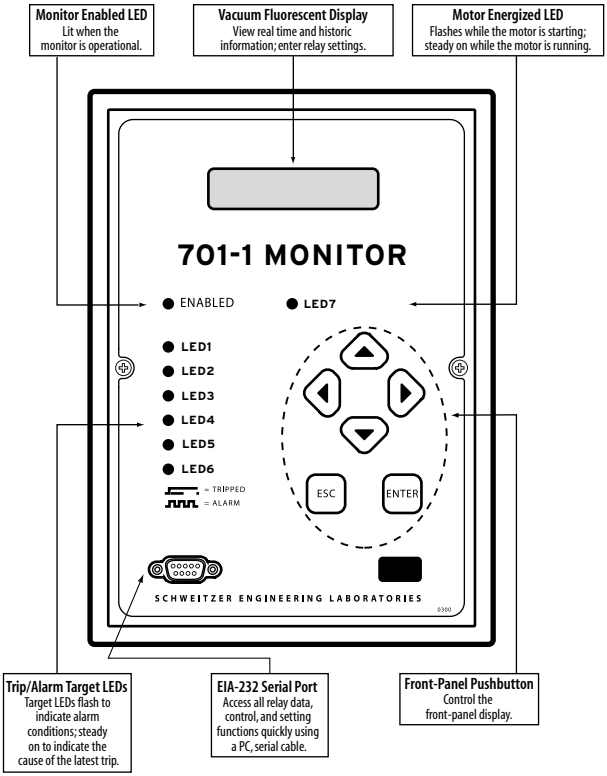

Figure 4.1 SEL-701-1 Monitor Front Panel.

Normal Front-Panel Display

In normal operation, the Enabled LED should be lit. Usually, you will find the front-panel vacuum fluorescent display dark. The monitor is equipped with a front-panel timeout setting (see *Front-Panel Configuration Settings on page 3.44 in Section 3: Settings Calculation*) that extends the life of the vacuum fluorescent display and improves front-panel security. After a settable period of inactivity, usually 15 minutes, the monitor automatically shuts off the display. If the front panel was in Access Level 2, it automatically returns to Access Level 1 when the display times out.

To activate the display, press the **{ESC}** pushbutton.

When the front-panel display is active, the monitor can place several screens in a rotation, showing each screen for about two seconds before moving to the next. The default meter screen, shown in *Figure 4.2*, includes the phase current and maximum phase-to-phase voltage magnitudes. If the monitor is equipped with optional voltage and/or RTD inputs, you can enable the monitor to add real and reactive power, power factor, and frequency meter screens and/or the temperatures of the hottest RTDs to the default rotation.

```
IA=   10.8 IB=  10.8
IC=   10.9  V=   481V
```

Figure 4.2 Default Meter Display Screen.

The monitor automatically displays custom text messages in rotation with the meter screens. The factory default settings define three display messages. Two of these messages are always included in the default display rotation and are shown in *Figure 4.3*. The third is only shown if an RTD failure is detected.

```
SEL-701-1
MONITOR
```

Figure 4.3 Default Display Message Screen.

Control the contents of these custom messages using the Display Message settings, described in *Display Message Settings on page 3.45 in Section 3: Settings Calculation*. If you wish to change the conditions under which the monitor displays a message, refer to *Appendix B: SELogic® Control Equations and Monitor Logic*.

Front-Panel Automatic Messages

The monitor displays automatic messages under the conditions described in *Table 4.1*.

Table 4.1: Front-Panel Automatic Messages

Condition	Front-Panel Message Shows
Motor Running Overloaded	Predicted time to thermal element trip, in seconds
Monitor Trip Has Occurred	Type or cause of the trip (See *Section 8: Event Analysis* for more information)
Monitor Self-Test Failure Has Occurred	Type of failure *Section 9: Maintenance & Troubleshooting*
Attempted Motor Start Was Blocked	Reason start was blocked and time until a start is allowed

Front-Panel Menus & Operations

Introduction

The SEL-701-1 Monitor front panel gives you access to most of the information that the monitor measures and stores. You can also use front-panel controls to start or stop the motor, pulse output contacts, and view or modify monitor settings.

All of the front-panel functions are accessible using the six-button keypad and vacuum fluorescent display. Use the keypad, shown in *Figure 4.4*, to maneuver within the front-panel menu structure, described in detail throughout the remainder of this section. *Table 4.2* describes the function of each front-panel button.

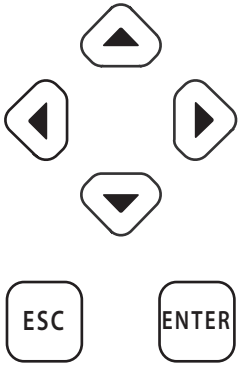

Figure 4.4 Front-Panel Pushbuttons.

Table 4.2: Front-Panel Pushbutton Functions

Button	Function
▲	Move up within a menu or data list. While editing a setting value, increases the value of the underlined digit
▼	Move down within a menu or data list While editing a setting value, decreases the value of the underlined digit.
◀	Move the cursor to the left. While viewing History Data, moves to data for a newer event.
▶	Move the cursor to the right. While viewing History Data, moves to data for an older event.
ESC	Wake up the front-panel display. Escape from current menu or display. Accept password displayed and proceed with protected action.
ENTER	Move from default display to main menu. Select menu item at the cursor. Select displayed setting to edit setting.

Front-Panel Security

Front-Panel Access Levels

The monitor front panel typically operates at Access Level 1 and allows any user to view monitor measurements and settings. Some activities such as editing settings and controlling output contacts are restricted to those monitor operators who know the monitor Access Level 2 password or can assert the ACCESS2 input (factory programmed to input IN4). In the figures that follow, restricted activities are marked with the padlock symbol shown in *Figure 4.5*.

Figure 4.5 Access Level Security Padlock Symbol.

Before you can perform a front-panel menu activity that is marked with the padlock symbol, you must enter the correct Access Level 2 password once or assert input IN4. After you have correctly entered the password, you can perform other Access Level 2 activities without reentering the password. The monitor will not request the password again until after the front-panel inactivity timer expires. (See *Output Configuration on page 3.43 in Section 3: Settings Calculation*.)

Access Level 2 Password Entry

When you try to perform an Access Level 2 activity, the monitor determines whether you have entered the correct Access Level 2 password since the front-panel inactivity timer expired. If you have not, the monitor displays the screen shown in *Figure 4.6* for you to enter the password.

```
Password=_
A B C D E F G H I J
K L M N O P Q R S T
U V W X Y Z . . . .
a b c d e f g h i j
k l m n o p q r s t
u v w x y z . . . .
0 1 2 3 4 5 6 7 8 9
- . _ . . . . . . .
INS DEL CLR . . . .
```

Figure 4.6 Password Entry Screen.

To Enter The Password

NOTE: Use these steps to enter the correct password to execute an Access level 2 function or to change the Access Level 2 password, as described in *Figure 4.20 on page 4.15*.

Step 1. Press the **{Down Arrow}** pushbutton. A blinking cursor will appear in the first character position of the password and an underline will appear beneath the A character in the lower line of the display.

Step 2. Underline the first character of the password by moving through the characters shown in *Figure 4.6*. Use the left and right arrow pushbuttons to move the underline to the left and right and the up and down arrow pushbuttons to move to other character rows.

Step 3. With the correct first character underlined, press the **{ENTER}** pushbutton. The first character will appear in the upper line of the display and the blinking cursor will move one character to the right.

Step 4. Using the arrow pushbuttons, continue to move within the character table and select each of the characters to build the Access Level 2 password.

Step 5. With the correct Access Level 2 password spelled in the upper line of the display, press the **{ESC}** pushbutton to move the cursor from the lower line of the display. Press the **{ENTER}** pushbutton to accept the password shown in the upper line of the display. If the password is correct, the monitor displays the message "Level 2 Access Granted." Press the **{ENTER}** pushbutton to continue your task. If the pass-word is incorrect, the monitor displays the message "Invalid Password." Press the **{ENTER}** pushbutton to return to your previous task.

NOTE: The factory default Access Level 2 password is 701.

To Correct Entry Errors

Step 1. If the cursor in the upper line of the display is blinking, press the **{ESC}** pushbutton once.

Step 2. Use the left or right arrow pushbutton to move the underline cursor to the position of the incorrect letter.

Step 3. With the incorrect letter underlined, press the {**Down Arrow**} pushbutton. The blinking cursor will reappear in the upper line of the display and the underline cursor will appear in the lower line.

a. To substitute a new character in the location of the blinking cursor, use the arrow pushbuttons to move the underline cursor to the location of the desired character in the character table and press the **{ENTER}** pushbutton.

b. To insert a character in front of the blinking cursor, use the arrow pushbuttons to move the underline cursor to INS and press the **{ENTER}** pushbutton. Use the arrow pushbuttons to move the underline to the desired character in the character table and press the **{ENTER}** pushbutton.

c. To delete the character at the blinking cursor, use the arrow pushbuttons to move the underline cursor to DEL and press the **{ENTER}** pushbutton.

d. To clear the entire password and start over, use the arrow pushbuttons to move the underline cursor to CLR and press the **{ENTER}** pushbutton.

Step 4. Continue making corrections until the password appears in the upper line of the display. With the correct Access Level 2 password spelled in the upper line of the display, press the **{ESC}** pushbutton to move the cursor from the lower line of the display. Press the **{ENTER}** pushbutton to accept the password shown in the upper line of the display. If the password is correct, the monitor displays the message: "Level 2 Access Granted." Press the **{ENTER}** pushbutton to continue your task. If the password was incorrect, the monitor displays the message "Invalid Password." Press the **{ENTER}** pushbutton to return to your previous task.

Front-Panel Main Menu

All access to information and monitor settings through the front panel starts at the monitor Main Menu. The remainder of this section describes the use of the main and lower level menus.

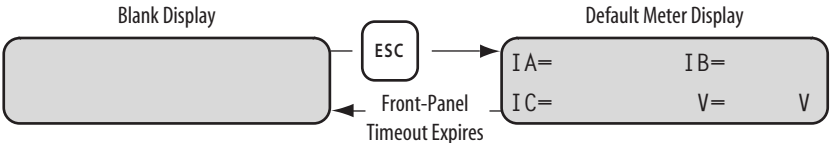

Figure 4.7 Activate Front-Panel Display.

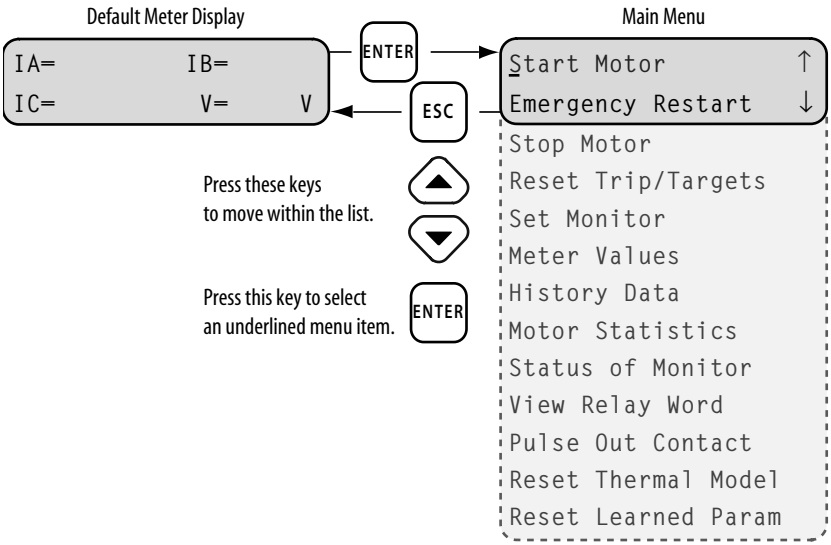

Figure 4.8 Front-Panel Main Menu.

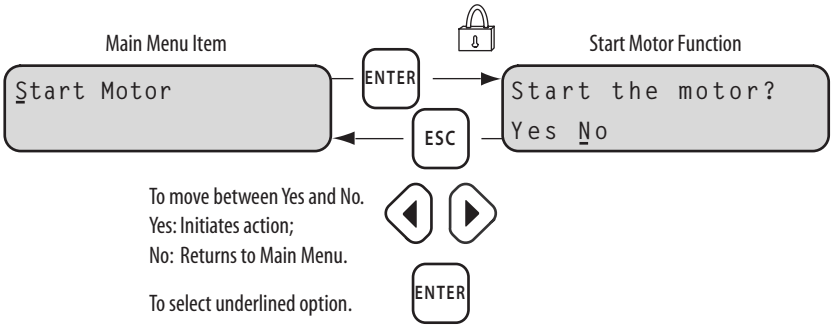

Figure 4.9 Main Menu: Start Motor Function.

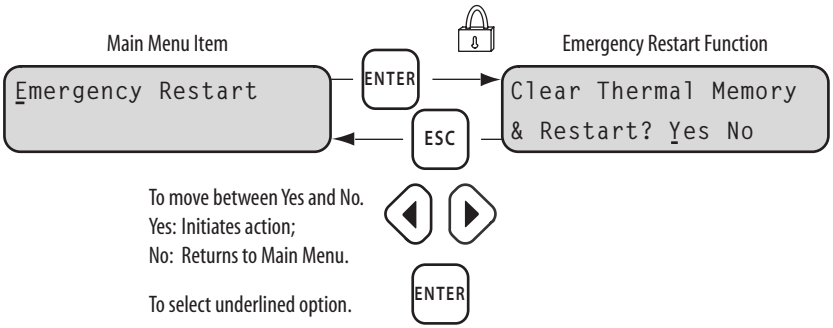

Figure 4.10 Main Menu: Emergency Restart Function.

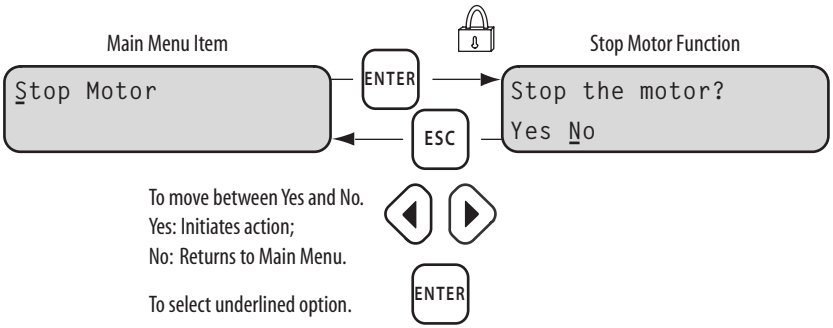

Figure 4.11 Main Menu: Stop Motor Function.

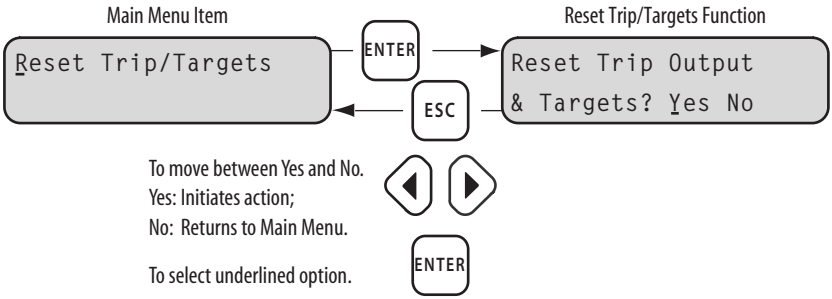

Figure 4.12 Main Menu: Reset Trip/Targets Function.

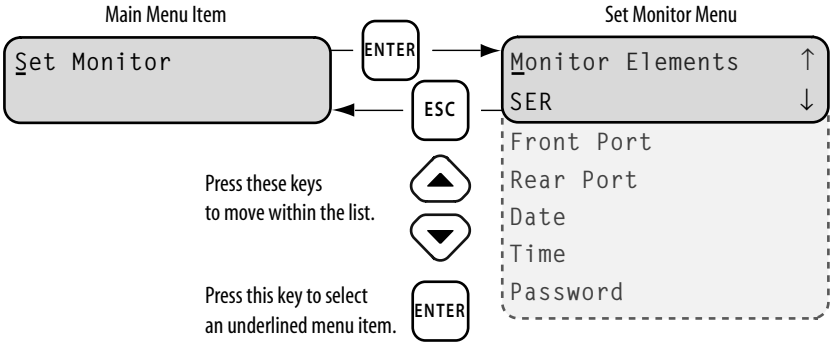

Figure 4.13 Main Menu: Set Monitor Function.

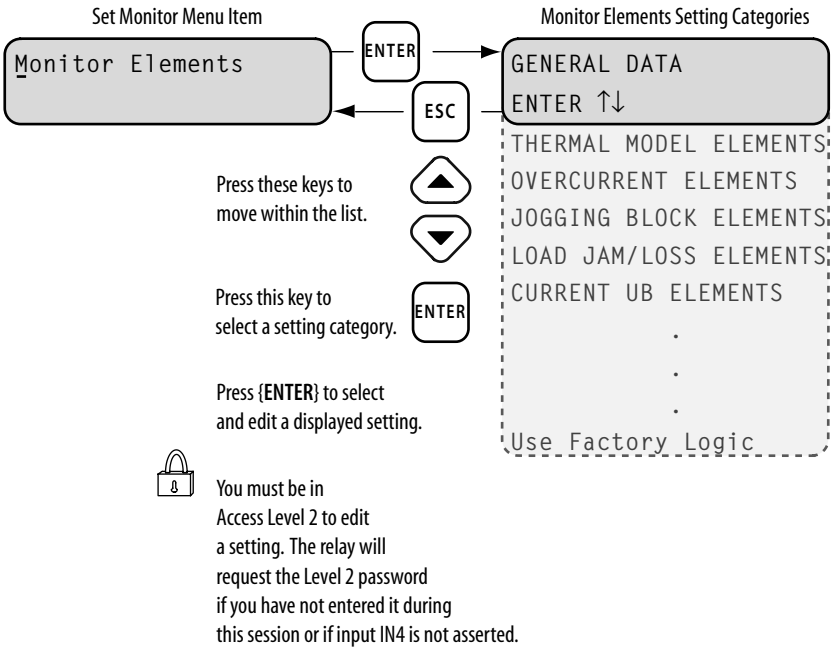

Figure 4.14 Set Monitor\Monitor Elements Function.

NOTE: Within the list of setting categories, press the {ENTER} pushbutton to view or change specific settings within the category. To edit a setting, press the {ENTER} pushbutton while the setting is displayed. The monitor requires Level 2 Access to edit settings.

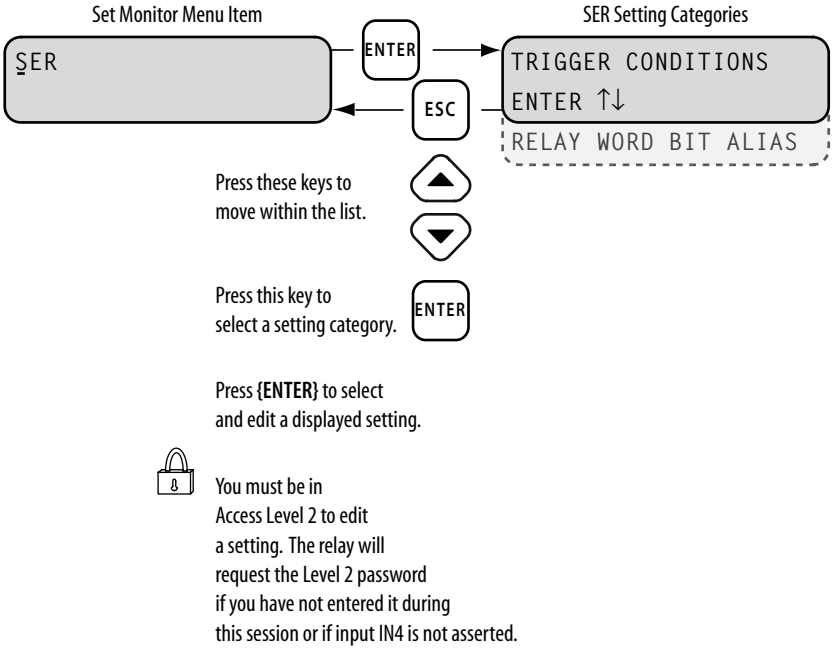

Figure 4.15 Set Monitor\SER Setting Categories.

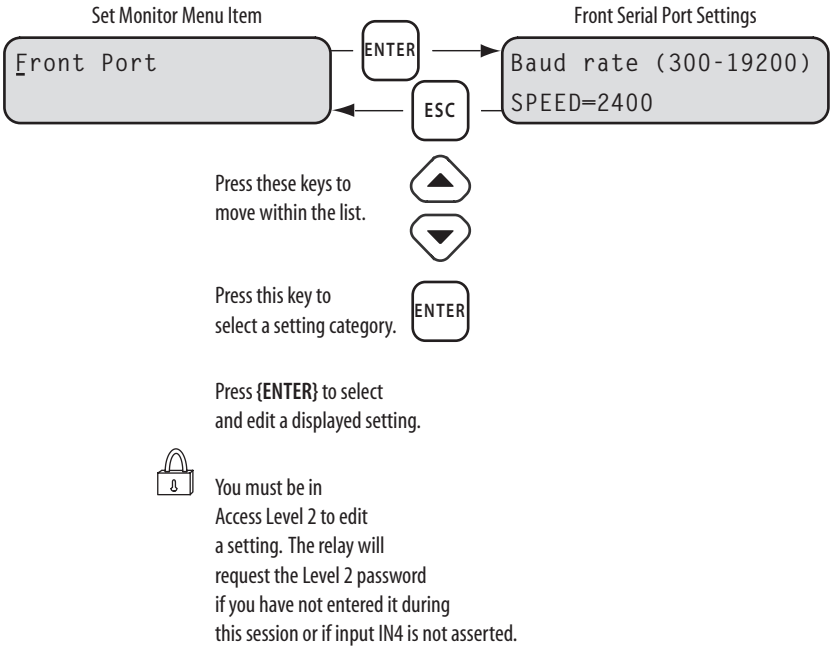

Figure 4.16 Set Monitor\Front Serial Port Settings.

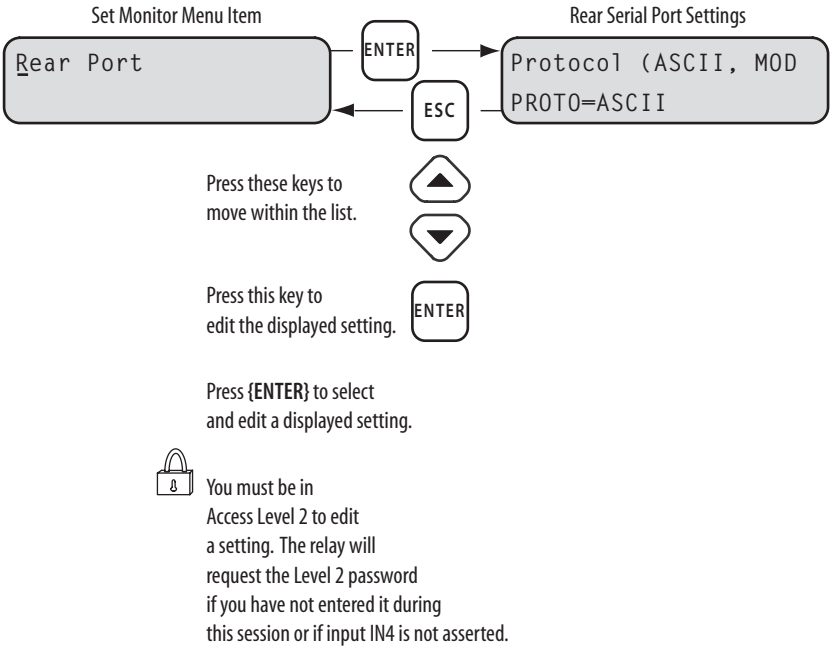

Figure 4.17 Set Monitor\Rear Serial Port Settings.

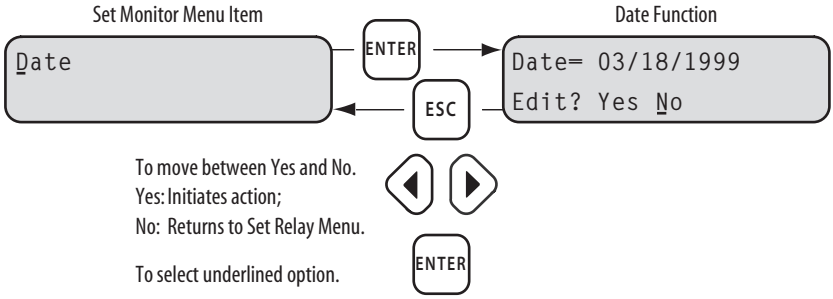

Figure 4.18 Set Monitor\Date Function.

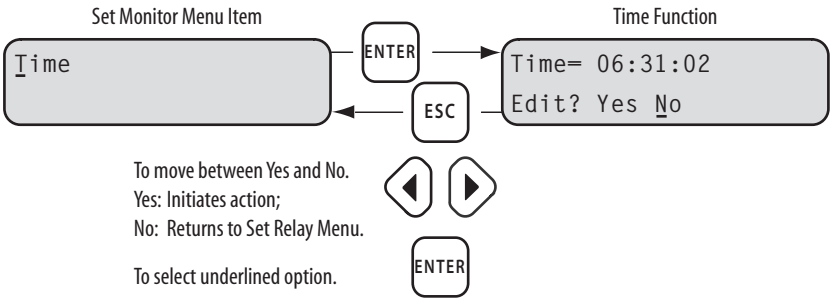

Figure 4.19 Set Monitor\Time Function.

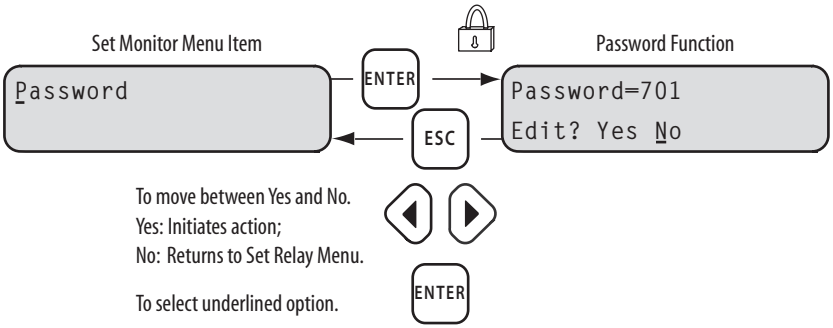

Figure 4.20 Set Monitor\Password Function.

NOTE: Edit the Access Level 2 password using the steps described in *Access Level 2 Password Entry on page 4.6* for password entry. Remember that the monitor password is case sensitive. To disable Access Level 2 password protection, set Password = DISABLE.

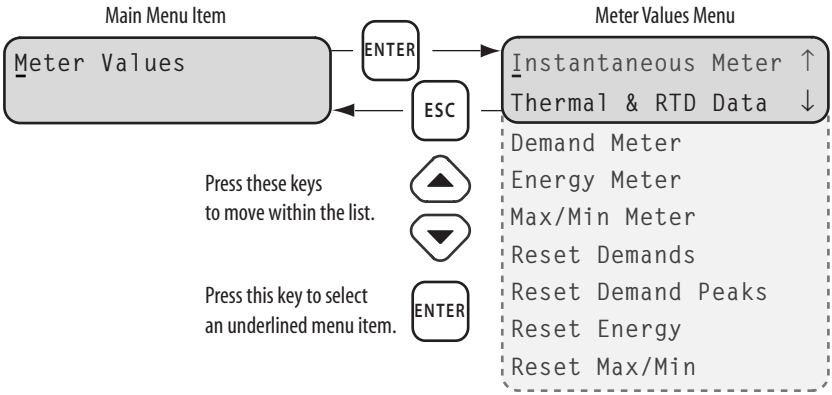

Figure 4.21 Main Menu: Meter Values Function.

The Meter Values menu includes functions to display and reset meter data. Display functions are Instantaneous Meter, Thermal and RTD Data, Demand Meter, Energy Meter, and Maximum/Minimum Meter. Reset functions are Reset Demands, Reset Demand Peaks, Reset Energy, and Reset Maximum/Minimum. When you select a display function such as Instantaneous Meter in *Figure 4.22*, the monitor displays a list of meter values you can move through using the up and down arrow buttons. When you select a reset function such as Reset Demand Peaks in *Figure 4.23*, the monitor displays a confirmation message. If you select yes, the monitor resets the indicated meter values.

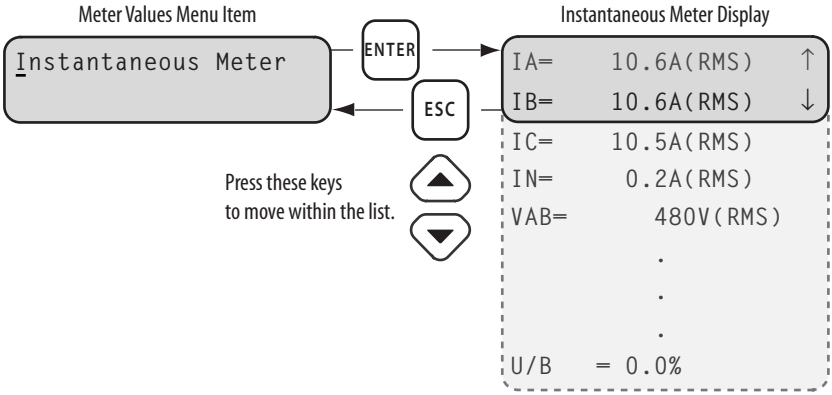

Figure 4.22 Meter Values Display Functions.

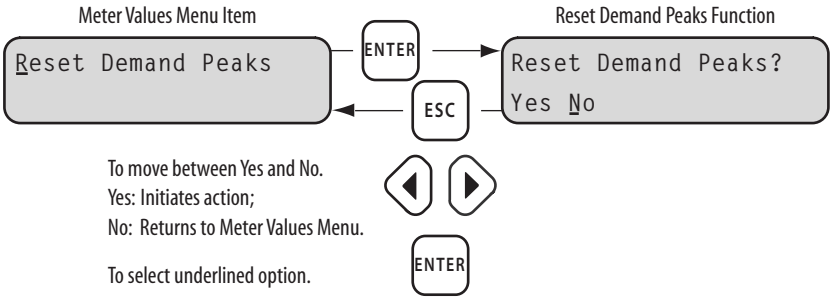

Figure 4.23 Meter Values Reset Functions.

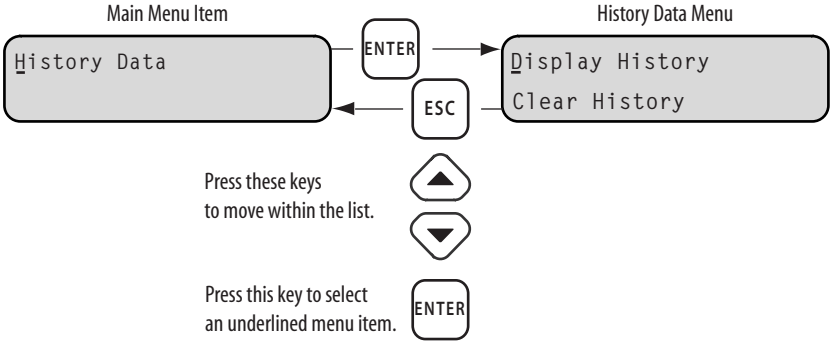

Figure 4.24 Main Menu: History Data Function.

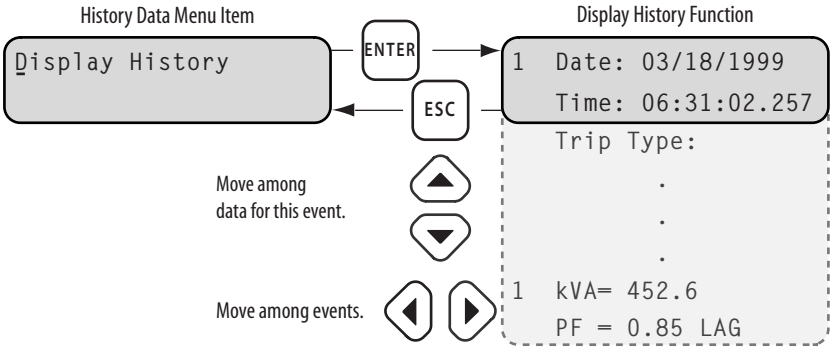

Figure 4.25 History Data\Display History Function.

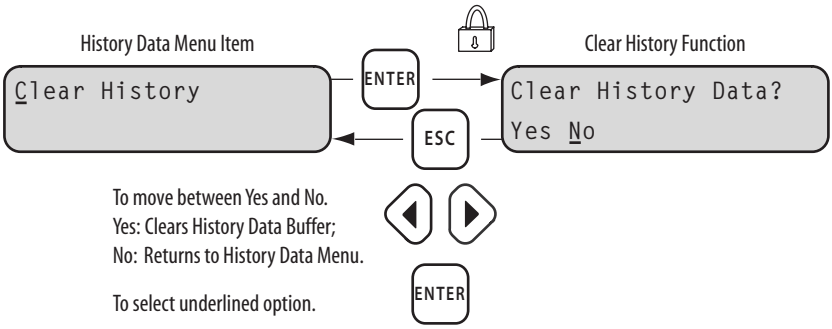

Figure 4.26 History Data\Clear History Function.

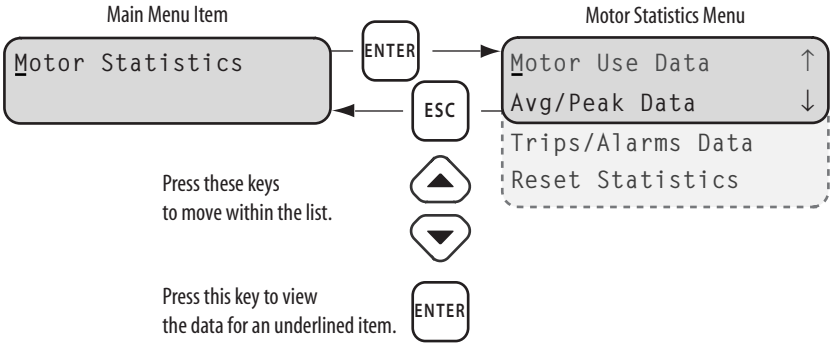

Figure 4.27 Main Menu: Motor Statistics Function.

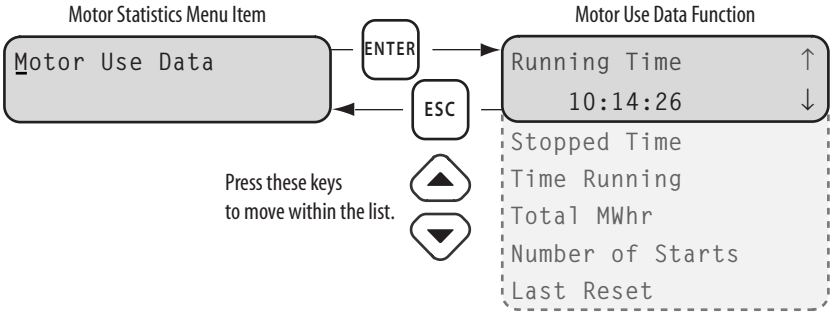

Figure 4.28 Motor Statistics\Motor Use Data Function.

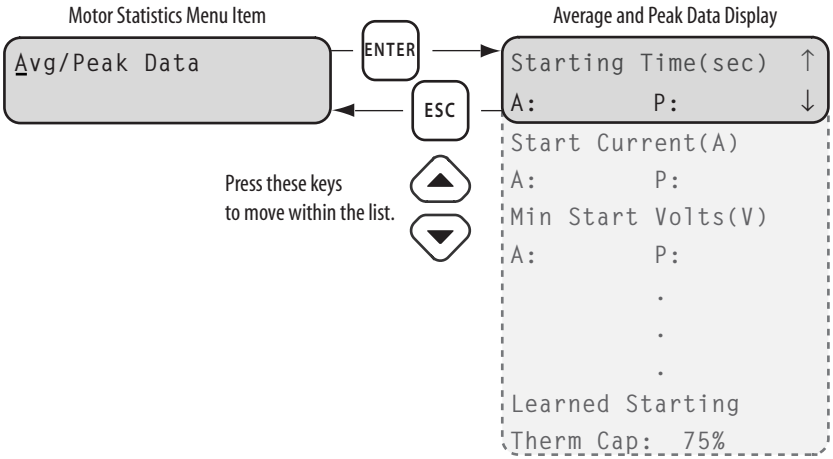

Figure 4.29 Motor Statistics\Average and Peak Data Function.

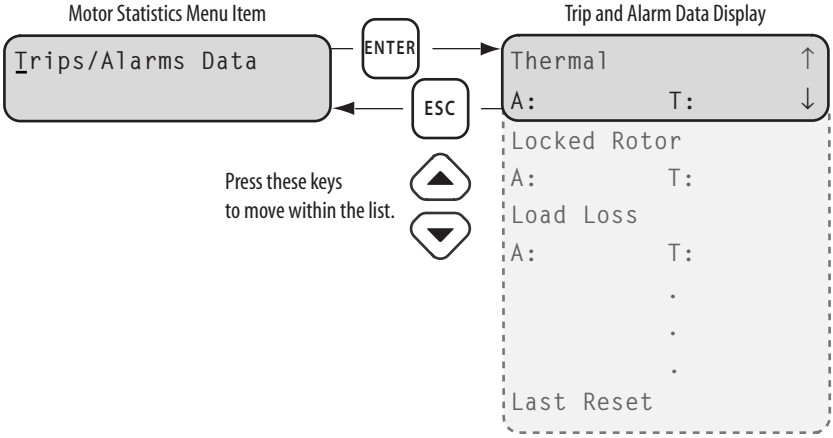

Figure 4.30 Motor Statistics\Trip and Alarm Data Function.

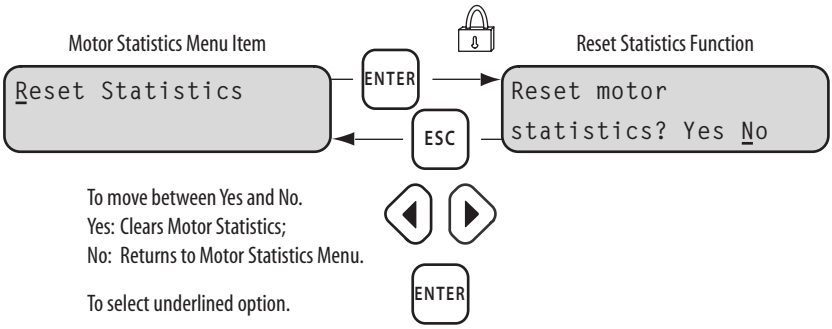

Figure 4.31 Motor Statistics\Reset Statistics Function.

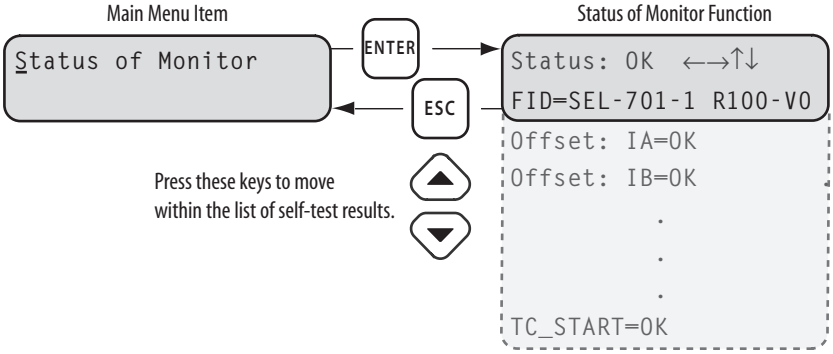

Figure 4.32 Main Menu: Status of Monitor Function.

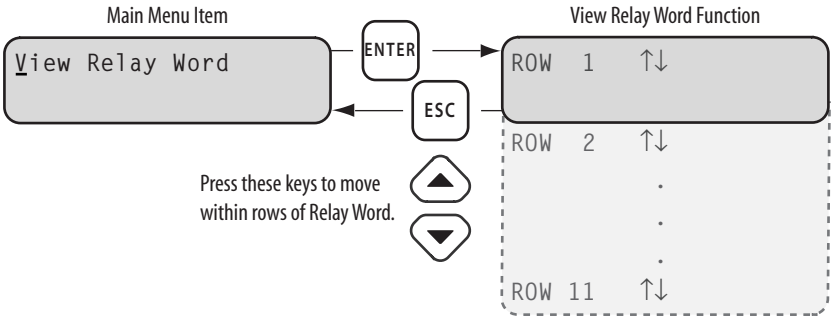

Figure 4.33 Main Menu: View Relay Word Function.

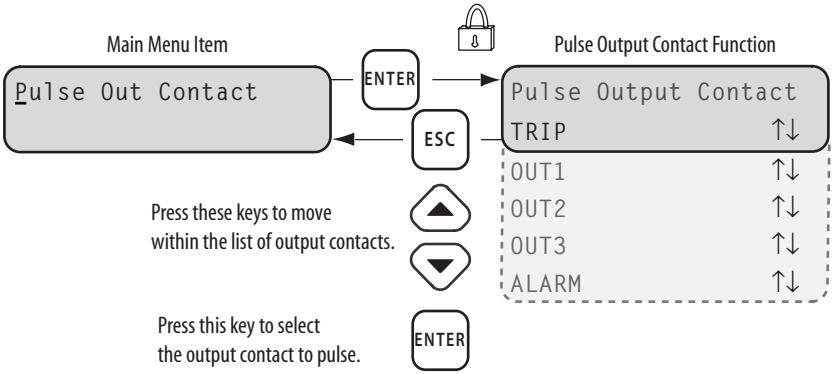

Figure 4.34 Main Menu: Pulse Out Contact Function.

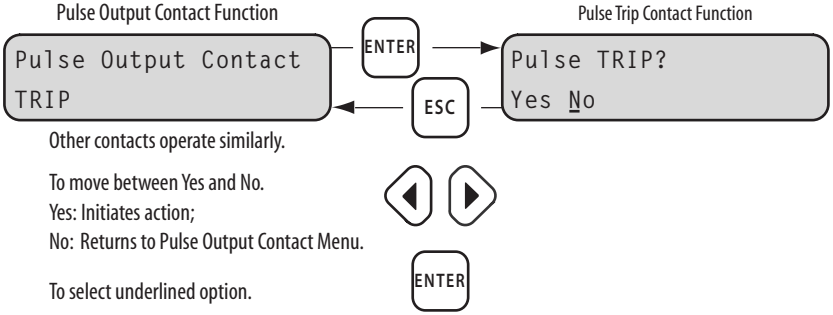

Figure 4.35 Pulse Output Contact Menu Function.

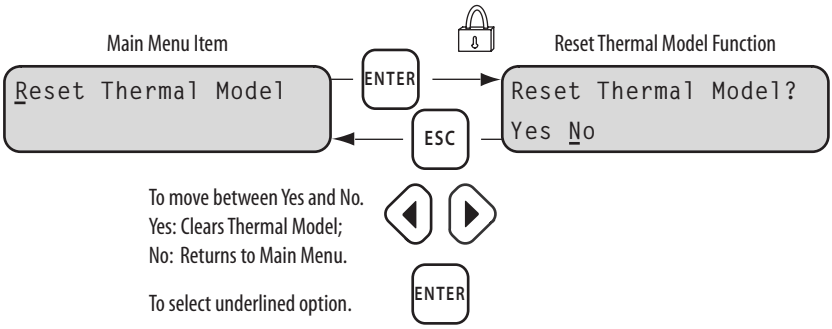

Figure 4.36 Main Menu: Reset Thermal Model Function.

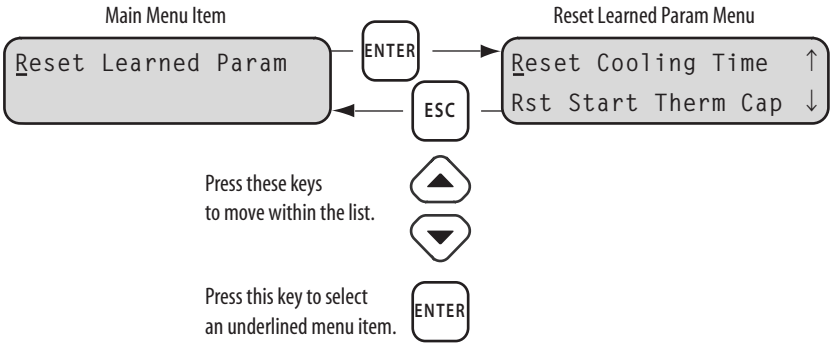

Figure 4.37 Main Menu: Reset Learned Param Function.

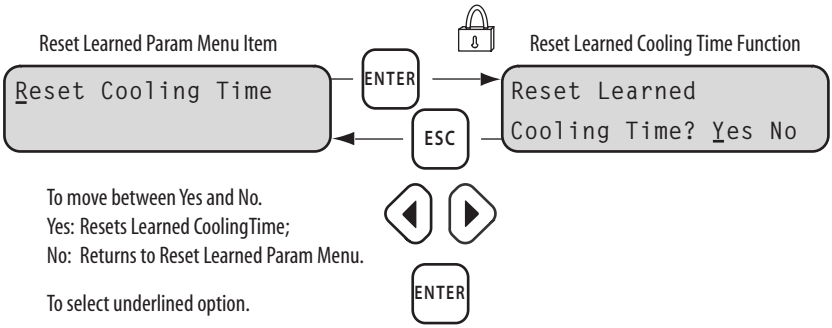

Figure 4.38 Reset Learned Param\Reset Cooling Time Function.

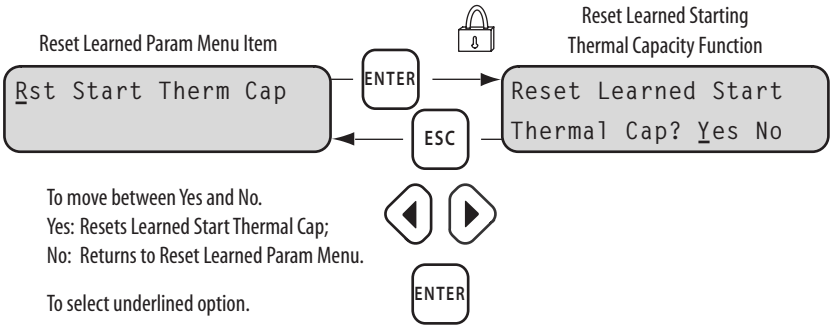

Figure 4.39 Reset Learned Param\Reset Start Therm Cap Function.

This page intentionally left blank

Section 5

ASCII Serial Port Operation

Introduction

You can interact with the SEL-701-1 Monitor through the front-panel interface or the serial port interface. This section describes the connections and commands used with the serial port interface; the front-panel interface is discussed in *Section 4: Front-Panel Operation*.

The serial port provides the only way to retrieve some of the extensive data that the monitor stores. Use a PC connected to the monitor front-panel serial port to download the following information:

- Load Profile data.
- Motor Start reports.
- Motor Start Trend reports.
- 15-Cycle Event Reports for fault and oscillographic analysis.
- Sequential Events Recorder (SER) reports for fault analysis.

The first three of these items are described in *Section 7: Metering & Monitoring*; the last two are discussed in *Section 8: Event Analysis*.

You Will Need…

To connect a PC serial port to the monitor front-panel serial port and enter monitor commands, you will need the following:

- Personal computer equipped with one available EIA-232 serial port.
- Communication cable to connect the computer serial port to the monitor serial port.
- Terminal emulation software to control the computer serial port.
- SEL-701-1 Monitor.

On most newer computers, the connector for the EIA-232 serial port is a 9-pin D-sub connector. You can purchase the cable to connect the computer port to the monitor port from SEL (part number C234A), you can use a null-modem cable, or you can build your own cable using the pinouts shown in *Figure 5.1 on page 5.3*.

You can use a variety of terminal emulation programs on your personal computer to communicate with the SEL-701-1 Monitor. Examples of PC-based terminal emulation programs include:

- ProComm® Plus
- Relay/Gold
- Microsoft Windows® HyperTerminal
- SmartCOM
- CROSSTALK®

Connect Your PC to the Monitor

Connect your PC serial port to the SEL-701-1 Monitor serial port using a cable having the pinout shown in *Figure 5.1* or a null-modem cable. This and other cables are available from SEL. Use SEL-5801 Cable SELECTOR software to select an appropriate cable for another application. This software is available for download free from the SEL web site at www.selinc.com.

NOTE: If you use a null-modem cable connection to the monitor EIA-232 serial port, be aware that the monitor does not use the DTR and DSR signals. If your communication device requires these signals, please use a cable wired as shown in *Figure 5.1*.

For best performance, SEL Cable C234A should not be more than 50 feet (15 meters) long. For communications up to 500 meters and for electrical isolation of communications ports, use the SEL-2800 family of fiber-optic transceivers. Contact SEL for more details on these devices.

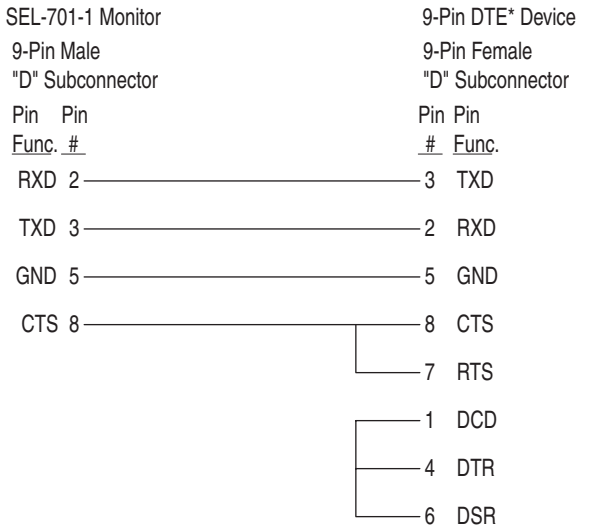

*DTE = Data Terminal Equipment (Computer, Terminal, etc.)

Figure 5.1 Cable C234A Pinout.

Female Chassis Connector, as Viewed From Outside Panel

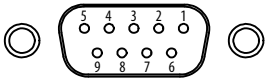

Figure 5.2 DB-9 Connector Pinout for EIA-232 Serial Ports.

Table 5.1 Pin Functions and Definitions for SEL-701-1 Monitor EIA-232 Serial Ports

Pin	Pin Function	Definition
1, 4, 6	N/C	No Connection
2	RXD, RX	Receive Data
3	TXD, TX	Transmit Data
5, 9	GND	Ground
	SHLD	Shield Ground
7	RTS	Request to Send
8	CTS	Clear to Send

Configure Your Terminal Emulation Software

Personal computers use terminal emulation software to send and interpret received characters at the EIA-232 serial port. This software allows you to type letters and numbers to form commands at the computer keyboard, and to see the characters you type and the monitor responses on the computer screen. In order for the PC to communicate correctly with the monitor, you must configure the terminal emulation software connection properties to match the monitor serial port configuration.

Configure your terminal emulation software to match the default settings shown in *Table 5.2*. For the best display, use VT-100 terminal emulation. If VT-100 is not available, WYSE-100 and ANSI terminal emulations also work.

Table 5.2 SEL-701-1 Monitor Serial Communication Default Settings

Setting	Default
Baud Rate	2400
Data Bits	8
Parity	N
Stop Bits	1
Flow Control	XON/XOFF (software flow control)

To change the port settings, use the front-panel Set Monitor\Front Serial Port or Rear Serial Port settings menu item.

Using Terminal Commands

When you type commands at the terminal emulation screen, you can type in either the entire command or just use the first three letters. For example, the commands **EVENT 1 <ENTER>** and **EVE 1 <ENTER>** both cause the monitor to display the most recent full length event report. You may use upper- and lower-case characters to type in commands; however, Access Level 2 Password entry is case sensitive. *Table 5.4 on page 5.8* lists all the user commands the monitor accepts at the EIA-232 serial ports.

The monitor serial ports use software flow control, meaning that character transmission is controlled by receipt of XON and XOFF characters. When the monitor receives XOFF during transmission, it pauses until it receives an XON character. If there is no message in progress when the monitor receives XOFF, it blocks transmission of any message presented to its buffer. Messages will be accepted after the monitor receives XON.

You can send control characters from most keyboards using the keystrokes listed in *Table 5.3*.

Table 5.3 Serial Port Control Characters

Control Characters	Key Commands	Key Command Instructions
XON	<CNTRL>Q	Hold down the Control key and press Q.
XOFF	<CNTRL>S	Hold down the Control key and press S.
CAN	<CNTRL>X	Hold down the Control key and press X.

You can use the XOFF character to pause in the middle of long transmissions from the monitor, such as event reports and SER reports. To resume the transmission use the XON character. To cancel a transmission in progress, use the **<CNTRL>X** keystrokes.

Serial Port Access Levels

The available serial port commands are listed in *Table 5.4 on page 5.8*. Some commands are not available at Access Level 1 for security reasons. All commands are available at Access Level 2.

Access Level 1

Access Level 1 is the lowest access level. The monitor serial ports are initially in Access Level 1 when you energize the monitor. If left in Access Level 2, serial ports automatically return to Access Level 1 after a settable inactivity period. When the monitor is in Access Level 1, the monitor sends the following prompt when you press **<ENTER>** or after a command response is finished:

```
=>
```

The Access Level 1 commands primarily allow the user to look at information (such as settings and metering) but not to change it.

Access Level 2

The Access Level 2 commands primarily allow the user to change monitor settings, reset data buffers, and control monitor outputs. If left in Access Level 2, serial ports automatically return to Access Level 1 after a settable inactivity period. All Access Level 1 commands are also available in Access Level 2.

When the monitor is in Access Level 2, the monitor sends the following prompt when you press **<ENTER>** or after a command response is finished:

```
=>>
```

Command Summary

Table 5.4 lists the serial port commands associated with particular activities. All Access Level 1 commands are also available in Access Level 2. The commands are shown in upper-case letters, but can also be entered with lower-case letters.

Table 5.4 SEL-701-1 Serial Port Command Summary

Access Level	Serial Port Command	Command Description	Page Number
Serial Port Access Commands			
1	HELP	Display available commands	5.10
1	2ACCESS	Go to Access Level 2	5.11
2	ACCESS	Go to Access Level 1	5.11
2	PASSWORD	View/change password	5.20
2	QUIT	Go to Access Level 1	5.21
Monitor Self-Test Status Commands			
1	STATUS	Display monitor self-test status	5.26
2	STATUS R	Clear self-test status and restart monitor	5.27
Monitor Clock/Calendar Commands			
1	DATE	View/change date	5.12
1	TIME	View/change time	5.31
Meter Data Commands			
1	METER	Display metering data	5.15
1	METER D	Display demand and peak demand data	5.16
1	METER E	Display energy metering data	5.16
1	METER M	Display max/min metering data	5.17
1	METER T	Display thermal metering data	5.17
1	METER RD	Reset demand ammeter	5.18
1	METER RE	Reset energy metering	5.18
1	METER RM	Reset max/min metering	5.18
1	METER RP	Reset peak demand ammeter	5.18

Table 5.4 SEL-701-1 Serial Port Command Summary (Continued)

Access Level	Serial Port Command	Command Description	Page Number
Event Analysis Commands			
1	EVENT	View event reports	5.13
1	HISTORY	View event summaries/histories	5.13
2	HISTORY R	Reset event history data	5.14
1	SER	View sequential events recorder data	5.21
2	SER R	Reset sequential events recorder data	5.22
1	TARGET	Display monitor element status	5.27
1	TARGET R	Reset target LEDs	5.30
1	TRIGGER	Trigger an event report	5.31
Motor Data Commands			
1	LDP	Display load profile data	5.14
1	LDP D	Display load profile buffer size	5.15
2	LDP R	Reset load profile data	5.15
1	MOTOR	Display motor statistics	5.18
2	MOTOR R	Reset motor statistics	5.19
1	MSR	Display motor start reports	5.19
1	MSR F	Display the format of a motor start report	5.19
1	MST	Display motor start trend data	5.19
2	MST R	Reset motor start trend data	5.19
2	RLP	Reset learned motor parameters	5.21
Monitor Setting Commands			
1	SHOW	Show/view monitor settings	5.24
2	SET	Enter/change monitor settings	5.22
Monitor Output Control Commands			
2	ANALOG	Test analog output	5.11
2	CON	Control remote bit	5.12
2	PUL	Pulse output contact	5.20
2	STOP	Stop motor	5.27
2	STR	Start motor	5.27

The serial port command explanations that follow in the *Command Explanations* subsection are in alphabetical order.

Command Explanations

Each command explanation lists:

- The command.
- The serial port access levels where the command is available, in parentheses.
- An explanation of the command use or response.

For example, you can execute the **HELP** command, below, from serial port Access Level 1 or 2.

HELP (Level 1 or 2)

Use the **HELP** command to display the available serial port commands. For more details regarding a particular command, type **HELP** CMD, where CMD is the name of the command you are interested in. *Figure 5.3* shows an example **HELP** command response.

```
=>HELP

Monitor Serial Port Commands:

Command (Access Level) Description

HELP cmd    (1 or 2)  View more detailed help for the command cmd
2ACCESS     (1 or 2)  Change to Access Level 2
ACCESS      (1 or 2)  Change to Access Level 1
ANA p t     (2)       Output an analog value of p% for t minutes (1 - 10)
ANA R t     (2)       Ramp the analog output over t minutes (1 - 10)
CONTROL n   (2)       Set, clear, or pulse Relay Word bit RBn (1 - 4)
DATE        (1 or 2)  View or change the date
EVENT n     (1 or 2)  View full-length event report n (1 - 14)
HISTORY     (1 or 2)  View the event summary reports
HISTORY R   (2)       Reset the event buffer
LDP         (1 or 2)  View load profile data
LDP D       (1 or 2)  View load profile buffer size, days remaining
LDP R       (2)       Reset load profile data
METER       (1 or 2)  View/reset monitor measured quantities
MOTOR       (1 or 2)  View the motor operating statistics
MOTOR R     (2)       Reset the motor operating statistics
MSR n       (1 or 2)  View motor start report n (1 - 5)
MST         (1 or 2)  View motor start trending data
MST R       (2)       Reset the motor start trend data
PASSWORD    (2)       View/change the monitor passwords
PULSE n k   (2)       Pulse output contact n for k minutes (1 - 30)
QUIT        (1 or 2)  Change to Access Level 1
RLP         (2)       Reset learned motor parameters
SER         (1 or 2)  View sequential events records
SER R       (2)       Reset the sequential events buffer
SET         (2)       Set the monitor
SHOW        (1 or 2)  View the monitor settings
STATUS      (1 or 2)  View the monitor self-test status
STATUS R    (2)       Reset monitor self-test warning or failure
STOP        (2)       Stop the motor
STR         (2)       Start the motor
TARGET      (1 or 2)  View the status of monitor elements, inputs, or outputs
TARGET R    (1 or 2)  Reset trip/target LEDs
TIME        (1 or 2)  View or change the time
TRIGGER     (1 or 2)  Trigger an event report
=>
```

Figure 5.3 HELP Command Response.

ACC & 2AC (Go to Access Level 1 or 2)

The **ACC** and **2AC** commands provide entry to the multiple access levels. Different commands are available at the different access levels as shown in *Table 5.4 on page 5.8*. Commands **ACC** and **2AC** are explained together because they operate similarly.

- **ACC** moves from Access Level 2 to Access Level 1.
- **2AC** moves from Access Level 1 to Access Level 2.

See *PASSWORD (Level 2) on page 5.20* for more information on passwords.

The factory default password for Access Level 2 is 701.

The monitor closes the ALARM b-contact for one second after a successful Level 2 access. If you make three incorrect password guesses, access is denied and the ALARM contact closes for one second. *Figure 5.4* shows an example **2AC** command execution.

```
=>2AC
Password: ? 701@@@
SEL-701-1                          Date: 08/15/2001 Time: 11:01:59.467
MONITOR



Level 2
=>>
```

Figure 5.4 2AC Command Example.

ANALOG (Level 2)

Use the **ANALOG p t** command to test the monitor analog current output. When you use the **ANALOG** command, the monitor ends normal analog current output and sends a signal defined by the percentage value, p = 0%–100% for t minutes (t = 1–10 minutes). For example, when the analog output signal type is 4–20 mA, the command **ANA 75 5.5** instructs the monitor to output 16 mA (75% of full scale) for 5.5 minutes or until any character or space key is pressed to end the test. *Figure 5.5* shows an example **ANA** command execution.

```
=>>ANA 75 5.5
Outputing 16.00mA to Analog Output Port for 5.5 minutes.
Press any key to end test
Analog Output Port Test Completed.
=>>
```

Figure 5.5 ANA Command Example.

You can also use the **ANALOG** command to generate a current signal that increases linearly. Replace the fixed percentage value with an R to ramp the signal from zero to full scale over time. For example, the command **ANA R 10** instructs the monitor to ramp the analog signal from zero to full scale, reaching full scale in ten minutes. As above, you can stop the test by pressing any keyboard character key or the space bar.

CONTROL (Level 2)

The **CONTROL** command is a two-step command that allows you to control Relay Word bits RB1 through RB4. At the Access Level 2 prompt, type **CON**, a space, and the number of the remote bit you wish to control (1–4). The monitor repeats your command followed by a colon. At the colon, type the Control subcommand you wish to perform (see *Table 5.5*).

Table 5.5 SEL-701-1 Monitor Control Subcommand

Subcommand	Description
SRB n	Set Remote Bit n ("ON" position)
CRB n	Clear Remote Bit n ("OFF" position)
PRB n	Pulse Remote Bit n for 1/4 cycle ("MOMENTARY" position)

The following example shows the steps necessary to pulse Remote Bit 4 (RB4):

```
=>>CON 4 <ENTER>
CONTROL RB4: PRB 4 <ENTER>
=>>
```

You must enter the same remote bit number in both steps in the command. If the bit numbers do not match, the monitor responds “Invalid Command.” See *Remote Control Switches on page B.34 in Appendix B: SELogic® Control Equations and Monitor Logic* for more information.

DATE (Level 1 or 2)

DATE displays the date stored by the internal calendar/clock. If the date format setting **DATE_F** is set to MDY, the date is displayed as month/day/year. If the date format setting is set to YMD, the date is displayed as year/month/day.

To set the date, type **DATE mm/dd/yyyy <ENTER>** if the Date Format setting is MDY. If the Date Format setting is set to YMD, type **DATE yyyy/mm/dd <ENTER>**. You can separate the month, day, and year parameters with spaces, commas, slashes, colons, or semicolons. *Figure 5.6* shows an example **DATE** command execution, changing the date to August 15, 2001.

```
=>>DATE 08/15/2001
08/15/2001
=>>
```

Figure 5.6 DATE Command Example.

EVENT (Level 1 or 2)

Use the **EVENT** command to view event reports. The general command format is listed in *Table 5.6*.

Table 5.6 Event Commands

Event n R	
Where:	
n	Event number (1–14). Defaults to 1 if not listed, where 1 is the most recent event.
R	Specifies the unfiltered (raw) event report. Displays 16 samples per cycle.

Table 5.7 lists example **EVE** commands. If you request an event report that does not exist, the monitor responds "Invalid Event." See *Example Event Report on page 8.15 in Section 8: Event Analysis* for an example event report.

Table 5.7 EVE Command Examples

Serial Port Command	Description
EVE	Display the most recent event report at 1/4-cycle resolution.
EVE 2	Display the second event report at 1/4-cycle resolution.
EVE R	Display the most recent report at 1/16-cycle resolution; analog data are not digitally filtered (raw).

HISTORY (Level 1 or 2)

HISTORY n displays event summaries. If no parameters are specified with the **HISTORY** command, the monitor displays up to 14 of the most recent event summaries in reverse chronological order. If **n** is a number (1–14), the monitor displays the n most recent event summaries. The monitor saves up to fourteen 15-cycle event reports. For more details on the information included in the monitor event summaries, see *Section 8: Event Analysis*. *Figure 5.7* shows an example **HISTORY** command response.

```
=>HIS 1

SEL-701-1                        Date: 07/08/1501    Time: 15:51:24.365
MONITOR

Event: UNBALANCED CURRENT
Event #: 1
Event Date: 07/08/1501
Event Time: 14:39:47.907

Frequency (Hz):       60.00
% Thermal Capacity:   69.0
% Unbalance Current:  15.3

                      IA        IB        IC        IN        IG       3I2
Currents (A):        259.7     191.6     190.6       0.1      68.2      69.0

                   Winding   Bearing   Ambient    Other
Hottest RTD (F):   150       112       78         NA

                     VAB       VBC       VCA
Voltages (V):        458       460       457

                      kW        kVAR      kVA       PF
Power:               163.8      44.1     169.6     0.97 LAG
=>
```

Figure 5.7 HISTORY Command Example.

HISTORY R (Level 2)

HISTORY R removes the event summaries and all corresponding event reports from nonvolatile memory.

LDP (Level 1 or 2)

Use the **LDP** (Load Profile) command to view information stored by the monitor Load Profile function described in detail in *Section 7: Metering & Monitoring*. Each load profile entry is stored with a record number, a date, and a time. You can access load profile data by record number or by date. The most recent record is always record number 1. The various **LDP** command options are listed in *Table 5.8*.

Table 5.8 LDP Command Options

Serial Port Command	Description
LDP	Display all available load profile data.
LDP n	Display the n most recent load profile records, starting with record n.
LDP n1 n2	Display load profile records n2 to n1, starting with n2.
LDP d1	Display all the load profile records made on date d1.
LDP d1 d2	Display all the load profile records made from d2 to d1, inclusive, starting with d2.

The date entries used with the **LDP** command should match the Date Format setting. If the Date Format setting equals MDY, then the dates entered should have the format mm/dd/yyyy. If the Date Format setting equals YMD, then the dates entered should have the format yyyy/mm/dd.

If the requested load profile records do not exist, the monitor responds "No Load Profile Data." See *Load Profiling on page 7.7 in Section 7: Metering & Monitoring* for an example load profile report.

LDP D (Level 1 or 2)

Use the **LDP D** command to learn how many total days of data the monitor can store and how many days remain until the oldest data is lost.

LDP R (Level 2)

LDP R removes the load profile data from nonvolatile memory.

METER (Level 1 or 2)

The **METER** commands provide access to the monitor metering data. To make the extensive amount of meter information manageable, the monitor divides the displayed information into five groups: Instantaneous, Demand, Energy, Maximum/Minimum, and Thermal.

Instantaneous Metering: METER k

The **METER k** command displays instantaneous magnitudes (and angles if applicable) of the measured and calculated analog quantities.

The angles are referenced to the A-phase voltage if it is included and greater than 13 V secondary; otherwise, the angles are referenced to A-phase current. The angles range from –179.99 to 180.00 degrees.

To view the instantaneous meter values once, use the **METER** command. To view the **METER** values k times, use the **METER k** command, where k is a number between 1 and 32767.

```
=>METER

SEL-701-1                          Date: 08/15/2001    Time: 19:59:15.739
MONITOR
                      A         B         C         N         G
I MAG (A, Fn)      69.74     69.85     69.61      0.00      0.33
      (A,RMS)      69.66     69.77     69.62      0.02
I ANG (DEG)       -45.08   -164.96     75.02   -156.51   -130.61
                   AB        BC        CA         G
V MAG (V, Fn)        464       465       464         1
      (V,RMS)        464       464       463
V ANG (DEG)         0.00   -120.08    119.85     -5.94
               3P
kW (Fn)        54.14
kW (AVG)       54.09
HP (Fn)        72.57
kVAR           14.44
kVA            56.03
pf              0.97 LAG
     Negative-Sequence Current   Negative-Sequence Voltage
               (3I2)                       (3V2)
MAG             0.07                          1
ANG (DEG)      53.63                      147.19
FREQ (Hz)      60.00
Unbalance (%)   0.1
=>
```

Figure 5.8 METER Command Example.

Demand Metering: METER D

The **METER D** command displays the demand and peak demand current values. If the monitor is equipped with voltage inputs, power demand and peak power demand quantities are also included.

```
=>METER D

SEL-701-1                          Date: 08/15/2001    Time: 15:59:26.490

MONITOR

            IA        IB        IC        IN        IG        3I2

DEMAND      38.7      38.6      38.6       0.0       0.7       0.5

PEAK        40.5      41.3      41.8       0.1       2.4       2.1

           kW3P      kVAR3P-IN    kVAR3P-OUT    kVA3P

DEMAND      667.2     179.7          0.0         692.0

PEAK        681.6     183.7          0.0         704.1

LAST DEMAND RESET 08/15/2001 11:11:18.305

LAST PEAK RESET   08/15/2001 11:11:17.120
=>
```

Figure 5.9 METER D Command Example.

Energy Metering: METER E

When the monitor is equipped with optional voltage inputs, the **METER E** command displays the measured kilowatt hours, kilovar hours, and kilovolt-amp hours since the last reset.

```
=>METER E

SEL-701-1                        Date: 08/15/2001    Time: 19:59:41.738
MONITOR
MWhr      MVARhr-IN   MVARhr-OUT   MVAhr
    3.4       1.7         0.0         4.5
LAST RESET 08/15/2001 11:10:05.370
=>
```

Figure 5.10 METER E Command Example.

Maximum/Minimum Metering: METER M

The **METER M** command displays the maximum and minimum values of assorted current, voltage, power, and temperature quantities. The monitor begins updating the maximum and minimum quantities 30 cycles after the motor starts. Voltage values are only updated if the phase-to-phase voltage is greater than 13 V secondary. Residual voltage, if wye-potentials are connected, is only updated if the voltage is greater than 3 V secondary.

```
=>METER M

SEL-701-1                          Date: 08/15/2001    Time: 19:59:53.365
MONITOR
             Max    Date        Time              Min    Date        Time
IA(A)       400.0  08/15/2001  14:00:36.676      15.6  08/15/2001  18:20:00.615
IB(A)       399.3  08/15/2001  14:00:36.726      19.6  08/15/2001  17:48:24.444
IC(A)       398.7  08/15/2001  14:00:36.676      19.1  08/15/2001  17:50:12.939
IN(A)         0.1  08/15/2001  17:53:21.805       0.1  08/15/2001  17:53:21.805
IG(A)        23.5  08/15/2001  15:44:54.574       1.5  08/15/2001  17:42:12.187
VAB(V)        470  08/15/2001  18:29:45.812        72  08/15/2001  18:28:49.100
VBC(V)        465  08/15/2001  15:33:17.710       200  08/15/2001  13:45:42.984
VCA(V)        464  08/15/2001  13:28:21.973        86  08/15/2001  13:45:43.971
VG(V)      RESET                                RESET
kW3P        159.7  08/15/2001  14:00:36.755       0.0  08/15/2001  18:26:44.964
kVAR3P       15.7  08/15/2001  18:29:34.063      -0.0  08/15/2001  18:29:48.921
kVA3P       159.6  08/15/2001  14:35:26.772       2.3  08/15/2001  18:28:48.928
 1 WDG (F)    161  08/15/2001  14:32:18.416       118  08/15/2001  04:44:36.676
 2 WDG (F)    158  08/15/2001  14:33:26.356       124  08/15/2001  04:36:58.786
 3 WDG (F)    155  08/15/2001  14:38:14.284       116  08/15/2001  04:42:32.476
 4 WDG (F)    164  08/15/2001  14:31:34.676       128  08/15/2001  04:40:14.135
 5 WDG (F)    150  08/15/2001  14:40:46.763       115  08/15/2001  04:39:28.616
 6 WDG (F)    158  08/15/2001  14:36:33.656       121  08/15/2001  04:39:40.526
 7 BRG (F)    120  08/15/2001  14:20:36.476        74  08/15/2001  04:45:34.873
 8 BRG (F)    112  08/15/2001  14:18:58.067        78  08/15/2001  04:44:56.908
 9 BRG (F)    114  08/15/2001  14:35:32.985        76  08/15/2001  04:35:46.089
10 BRG (F)    109  08/15/2001  14:30:16.975        81  08/15/2001  04:36:18.542
11 AMB (F)     98  08/15/2001  14:28:38.186        62  08/15/2001  04:38:36.458
LAST RESET 08/15/2001 11:09:10.745
=>
```

Figure 5.11 METER M Command Example.

Thermal & RTD Metering: METER T

The **METER T** command displays the temperatures of any connected RTDs. This command also shows the motor current in % of Full Load Amps, the present thermal model % Thermal Capacity, and the RTD % Thermal Capacity if ambient and winding temperatures are monitored and a winding RTD trip temperature is set. If the motor is

in overload, this command response shows the calculated time to a thermal trip. If the motor is not in overload, the time shown is 9999 seconds. The number of starts this hour and the minutes since the last start are also shown.

```
=>METER T

SEL-701-1                          Date: 08/15/2001    Time: 16:00:07.876
MONITOR
 1 WDG            =140 F
 2 WDG            =137 F
 3 WDG            =136 F
 4 WDG            =142 F
 5 WDG            =133 F
 6 OUTLET AIR      =136 F
 7 BRG            = 96 F
 8 BRG            = 91 F
 9 BRG            = 94 F
10 BRG            = 92 F
11 AMB            = 78 F

Full Load Amps(%)                          69.7
% Thermal Capacity                         47.1
RTD % Thermal Capacity                       43
Calculated Time to Thermal Trip (seconds)  9999

Minutes Since Last Start                      0
Starts This Hour                              0
=>
```

Figure 5.12 METER T Command Example.

METER RD (Level 1 or 2)

Reset the accumulated demand values using the **MET RD** command.

METER RE (Level 1 or 2)

Reset the measured energy values using the **MET RE** command.

METER RM (Level 1 or 2)

Reset the maximum/minimum meter values using the **MET RM** command.

METER RP (Level 1 or 2)

Reset the peak demand values using the **MET RP** command.

MOTOR (Level 1 or 2)

The **MOTOR** command displays the motor operating statistics that include the following:

- Total motor running hours, stopped hours, and percent running time.
- Total megawatt hours (if optional voltages are included).
- Total number of motor starts.

- Average and peak starting times, starting current magnitudes, thermal capacities, and other average and peak operating values.
- Learned motor cooling time (if RTDs are included) and learned starting thermal capacity.
- Trip and alarm counters, listed by type.

Section 7: Metering & Monitoring includes additional details on the motor operating statistics report.

MOTOR R (Level 2)

Reset the motor operating statistics using the **MOTOR R** command. The monitor resets all the data accumulators except the learned motor parameters, which you reset using the RLP command.

MSR (Level 1 or 2)

Use the **MSR** (Motor Start Report) command to view motor start reports. The monitor records a 3600-cycle report each time the motor starts. The general command format is listed in *Table 5.9*.

Table 5.9 MSR General Command Format

MSR n	
Where:	
n	Event number (1–5). Defaults to 1 if not listed, where 1 is the most recent event.
MSR F	Display the format of a motor start report.

See *Section 7: Metering & Monitoring* for information on the contents of motor start reports.

MST (Level 1 or 2)

Use the **MST** (Motor Start Trend) command to review the motor start trend data. The monitor records the number of starts and average information for each of the past eighteen 30-day periods. See *Section 7: Metering & Monitoring* for information on the contents of the motor start trend data.

MST R (Level 2)

Use the **MST R** command to reset the data stored in the motor start trend buffers. This should only be done at initial monitor installation, for motor rewinds, or after overhaul of the load equipment.

PASSWORD (Level 2)

WARNING: This device is shipped with default passwords. Default passwords should be changed to private passwords at installation. Failure to change each default password to a private password may allow unauthorized access. SEL shall not be responsible for any damage resulting from unauthorized access.

PAS allows you to inspect or change the existing password. To inspect the Access Level 2 password, type: **PAS <ENTER>**. The monitor will display the present password.

The factory default password for Access Level 2 is 701. To change the password for Access Level 2 to BIKE, enter: **PAS 2 BIKE <ENTER>.**

After entering the new password, type **PAS <ENTER>** to inspect it. Make sure it is what you intended and record it.

The password may include up to six characters. Valid characters consist of: ‘A–Z’, ‘a–z’, ‘0–9’, ‘-’, and ‘.’. Upper- and lower-case letters are treated as different characters.

Strong passwords consist of six characters, with at least one special character or digit and mixed case sensitivity, but do not form a name, date, acronym, or word. Passwords formed in this manner are less susceptible to password guessing and automated attacks. Examples of valid, distinct strong passwords include:

Ot3579	A24.68	Ih2dcs	4u-Iwg	.351r.

To disable password protection for Access Level 2, set the password to DISABLE.

PULSE (Level 2)

The **PULSE** command allows you to pulse any of the output contacts for a specified length of time. The command format is shown in *Table 5.10*.

Table 5.10 PULSE Command Format

PUL x y	
Where:	
x	The output name (TRIP, OUT1, OUT2, OUT3, or ALARM).
y	The pulse duration (1–30) in minutes. If y is not specified, the pulse duration defaults to 1 second.

Use the **PULSE** command to test contact wiring during installation and maintenance testing.

```
=>>PUL TRIP 1
Are you sure (Y/N) ? Y
=>>
```

Figure 5.13 PULSE Command Example.

QUIT (Level 2)

The **QUI** command returns the monitor to Access Level 1.

RLP (Level 2)

Use the **RLP** (Reset Learned Parameters) command at Access Level 2 to reset the learned motor parameters. You can reset the learned motor stopped cooling time and the learned motor starting time values individually. After a value is reset, the monitor needs five motor starts or motor stops to learn the parameter. Only use this command when the monitor is initially installed, after a motor rewind, or after overhaul of the load equipment.

```
=>>RLP
Reset the Learned Cooling Time (Y/N)? Y
Learned Cooling Time Reset


Reset the Learned Starting Thermal Capacity (Y/N)? Y
Learned Starting Thermal Capacity Reset
=>>
```

Figure 5.14 RLP Command Example.

SER (Level 1 or 2)

Use the **SER** (Sequential Events Record) command to view the Sequential Events Recorder (SER) report, described in detail in *Section 8: Event Analysis*. Each event record is stored with a record number, a date, and a time. You can access SER data by record number or by date. The most recent record is always record number 1. The various **SER** command options are shown in *Table 5.11*.

Table 5.11 SER Command Options

Serial Port Command	Description
SER	Display all available SER records.
SER n	Display the n most recent SER records, starting with record n.
SER n1 n2	Display SER records n2 to n1, starting with n2.
SER d1	Display all the SER records made on date d1.
SER d1 d2	Display all the SER records made from d2 to d1, inclusive, starting with d2.

The date entries used with the **SER** command are dependent on the Date Format setting. If the Date Format setting equals MDY, then the dates entered should have the format mm/dd/yyyy. If the Date Format setting equals YMD, then the dates entered should have the format yyyy/mm/dd. If the requested load profile records do not exist, the monitor responds "No SER Data."

SER R (Level 2)

SER R removes the SER data from nonvolatile memory.

SET (Level 2)

The **SET** command allows the user to view or change the monitor settings.

Table 5.12 Serial Port SET Commands

Command	Settings Type	Description
SET	Monitor	Protection elements, timers, etc.
SET R	SER	Sequential Events Recorder trigger conditions and ALIAS settings.
SET P n	Port	Serial port settings for Serial Port n (n = F or R).

When you issue the **SET** command, the monitor presents a list of settings one at a time. Enter a new setting or press **<ENTER>** to accept the existing setting. Editing keystrokes are shown in *Table 5.13*.

Table 5.13 SET Command Editing Keystrokes

Press Key(s)	Results
<ENTER>	Retains setting and moves to the next setting.
^ <ENTER>	Returns to previous setting.
< <ENTER>	Returns to previous setting category.
> <ENTER>	Moves to next setting category.
END<ENTER>	Exits editing session, then prompts you to save the settings.
<CTRL>X	Aborts editing session without saving changes.

The monitor checks each entry to ensure that it is within the setting range. If it is not, an “Out of Range” message is generated, and the monitor prompts you for the setting again.

When all the settings are entered, the monitor displays the new settings and prompts you for approval to enable them. Answer **Y<ENTER>** to enable the new settings. The monitor is disabled for as long as 5 seconds while it saves the new settings. The ALARM output b-contact closes momentarily and the Enabled LED extinguishes while the monitor is disabled.

To change a specific setting, enter the command shown in *Table 5.14*.

Table 5.14 SET Command Format

SET n s TERSE	
Where:	
n	not used to enter Monitor settings R to enter SER settings P F to enter front serial port settings P R to enter rear serial port settings
s	the name of the specific setting you wish to jump to and begin setting. If "s" is not entered, the monitor starts at the first setting.
TERSE	instructs the monitor to skip the settings display after the last setting. Use this parameter to speed up the SET command. If you wish to review the settings before saving, do not use TERSE option.

SHOW (Level 1 or 2)

Use the **SHOW** command to view monitor settings, serial port settings, and SER settings. **SHOW** command options are listed in *Table 5.15*.

Table 5.15 SHOW Command Options

Command	Description
SHOW	Show monitor settings.
SHO P n	Show serial port settings. n specifies the port (F or R); n defaults to the active port if not listed.
SHO R	Show SER settings.

You may append a setting name to each of the commands to specify the first setting to display (e.g., **SHO 50P1P** displays the monitor settings starting with setting 50P1P). The default is the first setting.

The **SHOW** commands display only the enabled settings. To display all settings, including disabled/hidden settings, append an A to the **SHOW** command (e.g., **SHOW A**).

```
=>SHOW
Monitor Settings:

RID     =SEL-701-1
TID     =MONITOR
CTR     = 20        ITAP    = 5         CTRN    = 10        INTAP   = 5
PHROT   = ABC       FNOM    = 60        DATE_F  = MDY       DMTC    = 15
PTR     = 4         DELTA_Y = Y         SINGLEV = N

SETMETH = RATING    FLA     = 5.00      SF      = 1.15      LRA     = 30.00
LRTHOT  = 2.1       LRTCOLD = 2.5       TD      = 1.00      TCAPU   = 90
TCSTART = 85        TCLRNEN = Y         COOLTIME= 259       COOLEN  = Y

50P1P   = OFF       50P2P   = OFF       50G1P   = 2.50      50G1D   = 0.10
50G2P   = OFF       50N1P   = 2.500     50N1D   = 0.10      50N2P   = OFF
50QP    = OFF

MAXSTART= 3         TBSDLY  = 20

LJTPU   = 2.0       LJTDLY  = 1.00      LLAPU   = OFF

46UBA   = 10        46UBAD  = 10.00     46UBT   = 15        46UBTD  = 5.00

Press RETURN to continue
E47T    = Y
SPDSDLY = OFF

RTDOPT   = INT      TMPREF  = F         RTD1LOC = OTH       RTD1NAM = OUTLET AIR
RTD2LOC  = WDG      RTD3LOC = WDG       RTD4LOC = WDG       RTD5LOC = WDG
RTD6LOC  = WDG      RTD7LOC = BRG       RTD8LOC = BRG       RTD9LOC = BRG
RTD10LOC = BRG      RTD11LOC= AMB       RTD1TY  = PT100     RTD2TY  = PT100
RTD3TY   = PT100    RTD4TY  = PT100     RTD5TY  = PT100     RTD6TY  = PT100
RTD7TY   = NI120    RTD8TY  = NI120     RTD9TY  = NI100     RTD10TY = NI100
RTD11TY  = PT100    RTD1T   = 230       RTD1A1  = 210       RTD1A2  = OFF
RTD1A3   = OFF      RTD2T   = 280       RTD2A1  = 250       RTD2A2  = OFF
RTD2A3   = 32       RTD3T   = 280       RTD3A1  = 250       RTD3A2  = OFF
RTD3A3   = 32       RTD4T   = 280       RTD4A1  = 250       RTD4A2  = OFF
RTD4A3   = 32       RTD5T   = 280       RTD5A1  = 250       RTD5A2  = OFF
RTD5A3   = 32       RTD6T   = 280       RTD6A1  = 250       RTD6A2  = OFF
RTD6A3   = 32       RTD7T   = 280       RTD7A1  = 250       RTD7A2  = OFF
RTD7A3   = 32       RTD8T   = 280       RTD8A1  = 250       RTD8A2  = OFF
RTD8A3   = 32       RTD9T   = 280       RTD9A1  = 250       RTD9A2  = OFF27
RTD9A3   = 32       RTD10T  = 280       RTD10A1 = 250       RTD10A2 = OFF
RTD10A3  = 32       RTD11T  = OFF       RTD11A1 = 250       RTD11A2 = OFF

Press RETURN to continue
RTD11A3 = OFF       EWDGV   = Y         EBRGV   = N         RTDBEN  =N
27P1P   = OFF       27P2P   = OFF
59O1O   = 73        59P2P   = OFF       59GP    = OFF
NVARAP  = OFF       NVARTP  = OFF
37PAP   = OFF       37OTO   = OFF
55LDAP  = OFF       55LDTP  = OFF
81D1P   = 59.10     81D1D   = 0.03      81D2P   = OFF       81D3P   = OFF
AOSIG   = 4-20MA    AOPARM  = %LOAD_I
FP_TO   = 15        FPBRITE = 50        FP_KW   = N         FP_RTD  = N

DM1_1   =SEL-701-1          DM1_0   =
DM2_1   =MONITOR            DM2_0   =
DM3_1   =RTD FAILURE        DM3_0   =
DM4_1   =                   DM4_0   =
DM5_1   =                   DM5_0     =
DM6_1   =                   DM6_0     =
TRFS    = Y         OUT1FS  = N         OUT2FS  = N         OUT3FS  = N
TDURD   = 0.50      ABSDLY  = 0
FACTLOG = Y


LEUSE      76.8
SETCHK     B74A
=>>
```

Figure 5.15 SHOW Command Example.

STATUS (Level 1 or 2)

The **STATUS** command displays the monitor self-test information.

To view a status report, enter the command **STATUS**. To view the status report k times, enter the command **STATUS k**, where k is a number between 1 and 32767.

STATUS Command Row & Column Definitions

Table 5.16 STATUS Command Options

STA Command Row	Column Definitions
FID	Firmware identifier string.
CID	Firmware checksum identifier.
Offset	Measures the dc offset voltages for the current and voltage channels.
+5V_PS	Tests the power supply voltage outputs.
-5V_PS	
+15V_PS	
+28V_PS	
TEMP	Tests the internal monitor temperature.
RAM, ROM, CR_RAM (critical RAM), and EEPROM	Tests the monitor memory components.
BATTERY	Tests the real time clock battery voltage.
RTC	Tests the real time clock integrated circuit.
LC_TIME	Tests the memory locations where the Motor Learned Cooling Time data is stored.
TC_START	Tests the memory locations where the Motor Learned Thermal Capacity to Start data is stored.

The monitor indicates OK or FAIL for each self-test result. Refer to *Section 9: Maintenance & Troubleshooting* for self-test thresholds and corrective actions.

```
=>STATUS

SEL-701-1                        Date: 08/15/2001    Time: 19:01:28.364
MONITOR

FID=SEL-701-1-R300-V11xxx-Z100100-D20010815 CID=4A50

SELF TESTS

         IA       IB       IC       IN
Offset:  OK       OK       OK       OK

         VA       VB       VC       N
Offset:  OK       OK       OK       OK

+5V_PS   -5V_PS   +15V_PS  +28V_PS
OK       OK       OK       OK

TEMP     RAM      ROM      CR_RAM   EEPROM
OK       OK       OK       OK       OK

BATTERY  RTC      LC_TIME  TC_START
OK       OK       OK       OK

 Monitor Enabled
=>
```

Figure 5.16 STATUS Command Example.

STATUS R (Level 2)

To reset the self-test status and restart the monitor, use the **STA R** command from Access Level 2.

The monitor then restarts (just like powering down, then powering up the monitor) and all diagnostics are rerun before the monitor is enabled.

STOP (Level 2)

The **STOP** command causes the monitor to trip, opening the motor contactor or circuit breaker and stopping the motor. The command also triggers an event report.

STR (Level 2)

The **STR** (Start) command initiates a motor start using the monitor's internal logic. The factory default logic configures output contact OUT3 to close to start the motor. Refer to *Appendix B: SELogic® Control Equations and Monitor Logic* for information on how to change the factory default logic.

TARGET (Level 1 or 2)

The **TARGET** command displays the status of monitor elements whether they are asserted or deasserted. The elements are represented as Relay Word bits and are listed in rows of eight, called Relay Word rows. For additional information on individual Relay Word bits, refer to *Appendix B: SELogic® Control Equations and Monitor Logic*.

A Relay Word bit is either at a logical 1 (asserted) or a logical 0 (deasserted).

```
=>TARGET 1
STARTING RUNNING  STOPPED  JAMTRIP  LOSSALRM LOSSTRIP 46UBA    46UBT
0        1        0        0        0        0        0        0
=>
```

Figure 5.17 TARGET Command Example.

The **TAR** command options are listed in *Table 5.17*.

Table 5.17 TARGET Command Options

Commands	Descriptions
TAR n k	Shows Relay Word row number n (0–11). k is an optional parameter to specify the number of times (1–32767) to repeat the Relay Word row display. If k is not specified, the Relay Word row is displayed once. See *Table 5.18* for definition of Row 0. See *Table 5.19* for a list of the Relay Word bits in each row (n = 1-10).
TAR name k	Shows Relay Word row containing Relay Word bit name (e.g., TAR 50P1T displays Relay Word Row 3). Valid names are shown in *Table 5.18*. k is an optional parameter to specify the number of times (1–32767) to repeat the Relay Word row display. If k is not specified, the Relay Word row is displayed once.

Table 5.18 Front-Panel LEDs and the TAR 0 Command

LED Name	Enabled	Motor Energized	Thermal Overload	Overcurrent	Unbalance	Loal Loss	Voltage	Frequency
When LED is Dark, TAR 0 Displays	ENABLE 0	MOTRUN 0	THERM_OL 0	OVERCURR 0	UNBAL 0	LOADLOSS 0	VOLTAGE 0	FREQ 0
When LED is Flashing, TAR 0 Displays	—	MOTSTART 1	THERM_AL 1	—	UNBAL_AL 1	LOSS_AL 1	VOLT_AL 1	—
When LED is On, TAR 0 Displays	ENABLE 1	MOTRUN 1	THEM_OL 1	OVERCURR 1	UNBAL 1	LOADLOSS 1	VOLTAGE 1	FREQ 1

Note: See *Section 8: Event Analysis* for additional information on the meaning of each target LED condition.

Table 5.19 SEL-701-1 Monitor Word and Corresponding TAR Command

Tar	Relay Word Bits							
1	STARTING	RUNNING	STOPPED	JAMTRIP	LOSSALRM	LOSSTRIP	46UBA	46UBT
2	49A	49T	THERMLO	NOSLO	TBSLO	ABSLO	*	*
3	50P1T	50P2T	50N1T	50N2T	50QT	50S	50G1T	50G2T
4	47T	TRGTR	START	52A	SPDSTR	SPEEDSW	RTDBIAS	RTDFLT
5	WDGALRM	WDGTRIP	BRGALRM	BRGTRIP	AMBALRM	AMBTRIP	OTHALRM	OTHTRIP
6	27P1	27P2	59P1	59P2	59G	81D1T	81D2T	81D3T
7	37PA	37PT	55A	55T	VARA	VART	*	*
8	LT1	LT2	LT3	LT4	RB1	RB2	RB3	RB4
9	SV1	SV2	SV3	SV4	SV1T	SV2T	SV3T	SV4T
10	IN1	IN2	IN3	IN4	IN5	IN6	IN7	*
11	TRIP	OUT1	OUT2	OUT3	ALARM	*	*	*
12	*	LED1	LED2	LED3	LED4	LED5	LED6	LED7
13	RTD1A1	RTD2A1	RTD3A1	RTD4A1	RTD5A1	RTD6A1	RTD7A1	RTD8A1
14	RTD9A1	RTD10A1	RTD11A1	RTD12A1	*	*	*	*
15	RTD1A2	RTD2A2	RTD3A2	RTD4A2	RTD5A2	RTD6A2	RTD7A2	RTD8A2
16	RTD9A2	RTD10A2	RTD11A2	RTD12A2	*	*	*	*
17	RTD1A3	RTD2A3	RTD3A3	RTD4A3	RTD5A3	RTD6A3	RTD7A3	RTD8A3
18	RTD9A3	RTD10A3	RTD11A3	RTD12A3	*	*	*	*
19	RTD1T	RTD2T	RTD3T	RTD4T	RTD5T	RTD6T	RTD7T	RTD8T
20	RTD9T	RTD10T	RTD11T	RTD12T	*	*	*	*

*Bit not used; reserved for future expansion.
Note: See *Section 8: Event Analysis* for additional information on the meaning of each target LED condition.

TARGET R (Level 1 or 2)

Resets front-panel tripping targets and releases the trip signal if the fault condition has vanished and no lockout conditions are present. If the monitor tripping targets do not reset when you execute the **TARGET R** command at the monitor serial port or use the front-panel menu selection Reset Trip/Targets, verify that the fault condition and all lockouts have cleared.

TIME (Level 1 or 2)

TIME displays the monitor clock. To set the clock, type **TIME** and the desired setting, then press **<ENTER>**. Separate the hours, minutes, and seconds with colons, semicolons, spaces, commas, or slashes.

```
=>TIME
16:02:21
=>
```

Figure 5.18 TIME Command Example.

TRIGGER (Level 1 or 2)

Use the **TRIGGER** command to generate an event report. See *Section 8: Event Analysis* for more information on event reports.

```
=>TRIGGER
Triggered
=>
```

Figure 5.19 TRIGGER Command Example.

Serial Port Automatic Messages

When the serial port AUTO setting is Y, the monitor sends automatic messages to indicate specific conditions. The automatic messages are described in *Table 5.20*.

Table 5.20 Serial Port Automatic Messages

Condition	Description
Power Up	The monitor sends a message containing the present date and time, relay and terminal identifiers, and the Access Level 1 prompt when the monitor is turned on.
Event Trigger	The monitor sends an event summary each time an event report is triggered. See *Section 8: Event Analysis*.
Self-Test Warning or Failure	The monitor sends a status report each time a self-test warning or failure condition is detected. See *STATUS Command Row & Column Definitions on page 5.26*.

Section 6
Commissioning

Introduction

This section provides guidelines for commissioning and testing the SEL-701-1 Monitor.

SEL performs a complete functional check and calibration of each monitor before it is shipped. This helps to ensure that you receive a monitor that operates correctly and accurately. Commissioning tests should verify that the monitor is properly connected to the power system and all auxiliary equipment. Verify control signal inputs and outputs. Use an ac connection check to verify that the monitor current and voltage inputs are of the proper magnitude and phase rotation.

Brief functional tests ensure that the monitor settings are correct. It is not necessary to test every monitor element, timer, and function in these tests.

Monitor Commissioning Procedure

Introduction

This procedure is a guideline to help you enter settings into the SEL-701-1 Monitor and verify that it is properly connected. Modify the procedure as necessary to conform with your standard practices.

Use the commissioning procedure at initial monitor installation; you should not need to repeat it unless major changes are made to the monitor electrical connections.

Required Equipment

- SEL-701-1 Monitor, installed and connected according to your protection design
- PC with serial port or terminal emulation software and serial communication cable (for monitor setting entry)
- SEL-701-1 Monitor Settings Sheets copied from *Appendix F: SEL-701-1 Monitor Settings Sheets* or filled out with settings appropriate to your application and protection cabinet design
- AC and dc elementary schematics and wiring diagrams for this monitor installation
- Continuity tester
- Protective monitor ac test source:

  Minimum: Single-phase voltage plus single-phase current with ability to control phase angle between signals

  Preferred: Two- or three-phase voltage plus three-phase current with ability to control phase angle between signals

Commissioning Procedure

Step 1. Ensure that control power and ac signals are removed from the SEL-701-1 Monitor by opening the appropriate breaker(s) or removing fuses. Isolate the monitor TRIP contact.

Step 2. Verify the accuracy and correctness of the ac and dc connections by performing point-to-point continuity checks on the circuits associated with the SEL-701-1 Monitor.

Step 3. Apply ac or dc control power to the monitor. Within a moment of energizing the monitor, the green enable LED (Enabled) on the front panel should illuminate, and the monitor self-test ALARM b-contact (B17, B18) should open.

Step 4. Connect the PC to the monitor using the appropriate serial cable (SEL Cable C234A or a null-modem cable). Start the PC and terminal emulation software. Establish communication with the monitor at Access Level 1. Refer to *Section 5: ASCII Serial Port Operation* for more information on serial port communications. Enter Access Level 2 using the factory default password, 701.

HINT: Use the HELP command at any Access Level to get a list of available serial port commands.

Step 5. Using the front-panel Set Monitor\Date and Set Monitor\Time functions or serial port **DATE** and **TIME** commands, set the correct monitor clock time and, if necessary, date.

Step 6. Using the front-panel Set Monitor\Password or serial port Access Level 2 **PASSWORD** command, enter your new Access Level 2 password. Be sure to record the new password in a safe location.

Step 7. Using the **SET**, **SET R**, and **SET P** commands, enter monitor settings according to the Settings Sheets for your application.

Step 8. If you are using an SEL-2600 RTD Module, connect the fiber-optic cable to the module fiber-optic output. At the monitor-end of the fiber, you should be able to see a red light that indicates the module is sending data. Plug the monitor-end of the fiber into the monitor fiber-optic receiver input.

Step 9. Verify monitor ac connections. Connect the protective monitor ac test signal source to the SEL-701-1 Monitor through the motor control center wiring. (You may connect directly to the monitor; however, this does not verify the accuracy of the wiring in the motor control center.) Apply rated ac current (1 A or 5 A) to the monitor phase current inputs. If the monitor is equipped with voltage inputs, apply rated voltage for your application to the monitor phase voltage inputs.

- ➢ If you set the monitor to accept phase-to-neutral voltages (DELTA_Y = Y), set the current and/or voltage source phase angles as shown in *Figure 6.1*.
- ➢ If you use open-delta potentials, set the test source phase angles as shown in *Figure 6.2*.
- ➢ When you set the monitor to accept single-phase voltage (SINGLEV = Y), you can connect and apply VA or VAB only.
- ➢ Use the front-panel Meter Values\Instantaneous Meter function or serial port **METER** command to verify that the monitor is measuring the magnitude and phase angle of both voltage and current correctly, taking into account the monitor PTR and CTR settings and the fact that the quantities are displayed in primary units. This step verifies the signal polarity and per-phase ac connections to the monitor.

➢ Apply rated ac current (1 A or 5 A) to the monitor IN input if used. Use the front-panel or serial port **METER** function to verify that the monitor is measuring current magnitude and phase angle correctly, taking into account the monitor CTRN setting and the fact that the quantities are displayed in primary units.

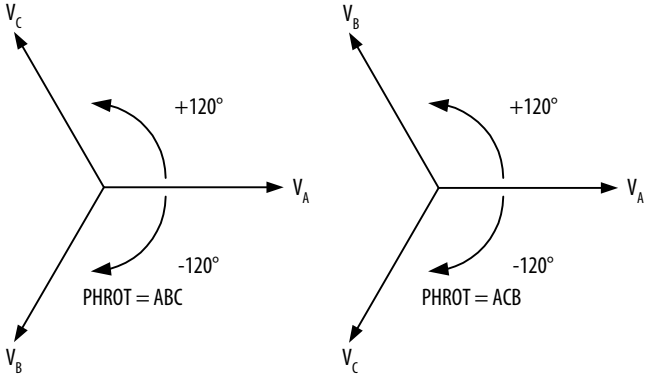

When setting PHROT = ABC, set angle Va = angle Ia = 0°
set angle Vb = angle Ib = -120°
set angle Vc = angle Ic = 120°

When setting PHROT = ACB, set angle Va = angle Ia = 0°
set angle Vb = angle Ib = 120°
set angle Vc = angle Ic = -120°

Figure 6.1 Three-Phase AC Connection Test Signals.

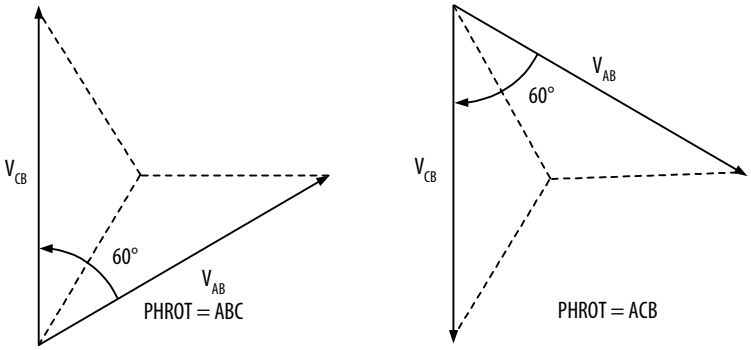

When setting PHROT = ABC, set angle Ia = 0°
set angle Ib = -120°
set angle Ic = 120°
set angle Vab = +30°
set angle Vcb = +90°

When setting PHROT = ACB, set angle Ia = 0°
set angle Ib = 120°
set angle Ic = -120°
set angle Vab = -30°
set angle Vcb = -90°

Figure 6.2 Open-Delta AC Potential Connection Test Signals.

Step 10. Verify contact input connections. Using the front-panel View Relay Word\Row 10 function, check the contact input status in the monitor front-panel display. As you short-circuit each input, its label (IN1, IN2, IN3, etc.) should appear in the front-panel display.

Step 11. Verify monitor contact output electrical performance using the front-panel Pulse Out Contact\TRIP command to close the TRIP output contact. Repeat for the other output contacts. Make sure that each contact operates properly in its designated annunciation, control, or tripping circuit. See *Section 4: Front-Panel Operation* and *Section 5: ASCII Serial Port Operation* for more details regarding the **PULSE** command.

Step 12. Perform any desired protection element tests using the individual element test procedures found in *Selected Functional Tests on page 6.8*. Only perform enough tests to prove that the monitor operates as intended; exhaustive element performance characterizations are not necessary for commissioning.

Step 13. Connect the monitor for tripping duty. Verify that any settings changed during the tests performed in *Step 12* have been changed back to their correct values for this application.

Step 14. Prepare the monitor for operation by clearing the monitor data buffers, using the monitor commands in *Table 6.1*. This prevents data generated during installation testing from being confused with operational data collected later.

NOTE: The MOT R, MST R, and SER R commands should only be used at initial installation. Do not reset the motor operating statistics or SER buffer following routine maintenance unless you are very familiar with the use of the data contained in these buffers and are certain that the data is no longer needed.

Table 6.1 Serial Port Commands That Clear Monitor Data Buffer

Serial Port Command	Task Performed
MET RD	Resets Demand Meter Data
MET RP	Resets Peak Demand Meter Data
MET RE	Resets Energy Meter Data
MET RM	Resets Max/Min Data
LDP R	Resets the Load Profile Data
HIS R	Resets Event Report and History Command Buffers
MOT R	Resets Motor Operating Statistic Buffers
MST R	Resets Motor Start Trend Data
RLP	Reset Learned Motor Parameters
SER R	Resets Sequential Events Record Buffer

Step 15. When it is safe to do so, start the motor.

Step 16. Verify the following ac quantities using the front-panel Meter Values\Instantaneous Meter or serial port **METER** command:

- ➢ Phase current magnitudes should be nearly equal.
- ➢ Phase current phase angles should be balanced, should have proper phase rotation, and should have appropriate phase relationship to their phase voltages.
- ➢ The positive-sequence current magnitude, I1, should be nearly equal to IA, IB, and IC.
- ➢ The negative-sequence current magnitude, I2, and residual current magnitude should both be nearly zero.

NOTE: If the monitor reports I1 near zero and I2 nearly equal to IA, IB, and IC, there is a phase rotation problem. Verify the monitor ac current connections and the phase rotation setting, PHROT. A nonzero 3I0 meter value indicates a phase current polarity connection problem.

Step 17. If your monitor is equipped with voltage inputs, check the following:

- ➢ Phase voltage magnitudes should be nearly equal.
- ➢ Phase voltage phase angles should be balanced and have proper phase rotation.
- ➢ The negative-sequence voltage magnitude, V2, and zero-sequence voltage magnitude, 3V0, if shown, should both be nearly zero.

NOTE: If the monitor reports V1 near zero and V2 nearly equal to VAB/1.74, there is a phase rotation problem. Verify the monitor ac voltage connections and the phase rotation setting, PHROT. A nonzero 3V0 meter value, if shown, typically indicates a single-phase voltage connection problem.

Step 18. The SEL-701-1 Monitor is now ready for continuous service.

Selected Functional Tests

Test Connections

Refer to *Table 6.2* to determine which test source connection diagram to use for testing in your application.

Table 6.2 Test Source Connections for Different Monitor Configurations

AC Configuration	Test Source Connections
Currents Only	See *Figure 6.3 on page 6.9*, connect currents only.
Currents plus single-phase voltage connected phase-to-phase	See *Figure 6.4 on page 6.10*, connect currents and A-B voltage only. Include B-N jumper connection.
Currents plus single-phase voltage connected phase-to-neutral	See *Figure 6.3 on page 6.9*, connect currents and A-N voltage only.
Currents plus three-phase voltages connected phase-to-phase	See *Figure 6.4 on page 6.10*
Currents plus three-phase voltages connected phase-to-neutral	See *Figure 6.3 on page 6.9*

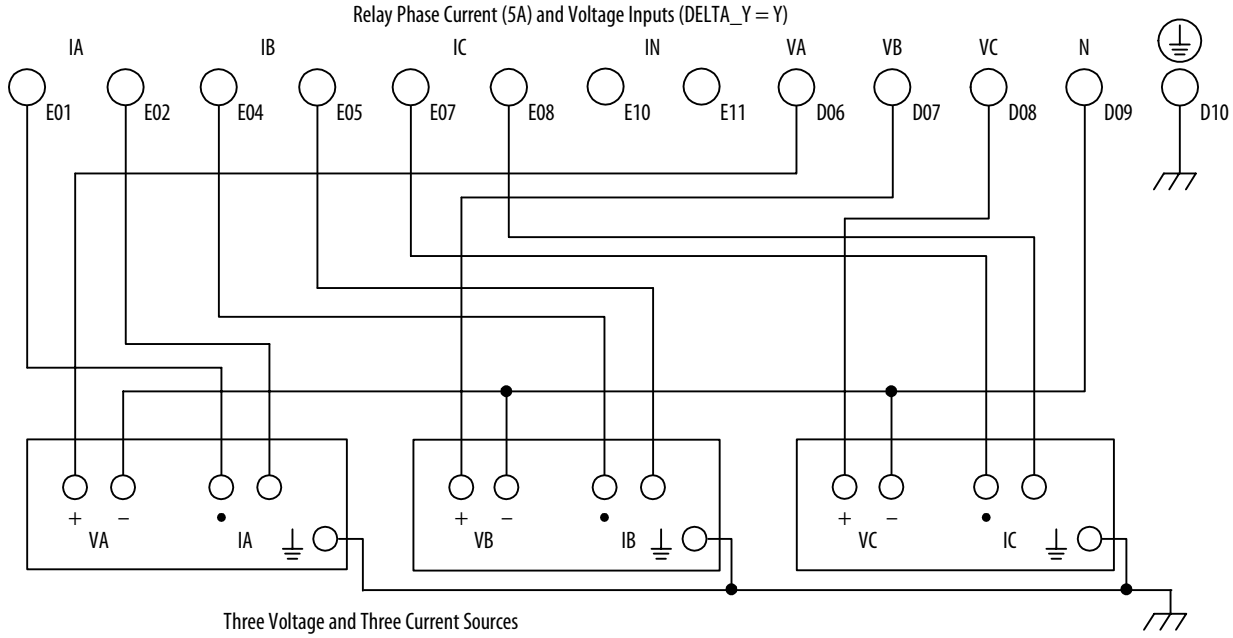

Figure 6.3 Three Voltage Source and Three Current Source Test Connections
Monitors equipped with ac voltage inputs (Models 0701101X and 0701111X) must be properly grounded for accurate voltage measurement.

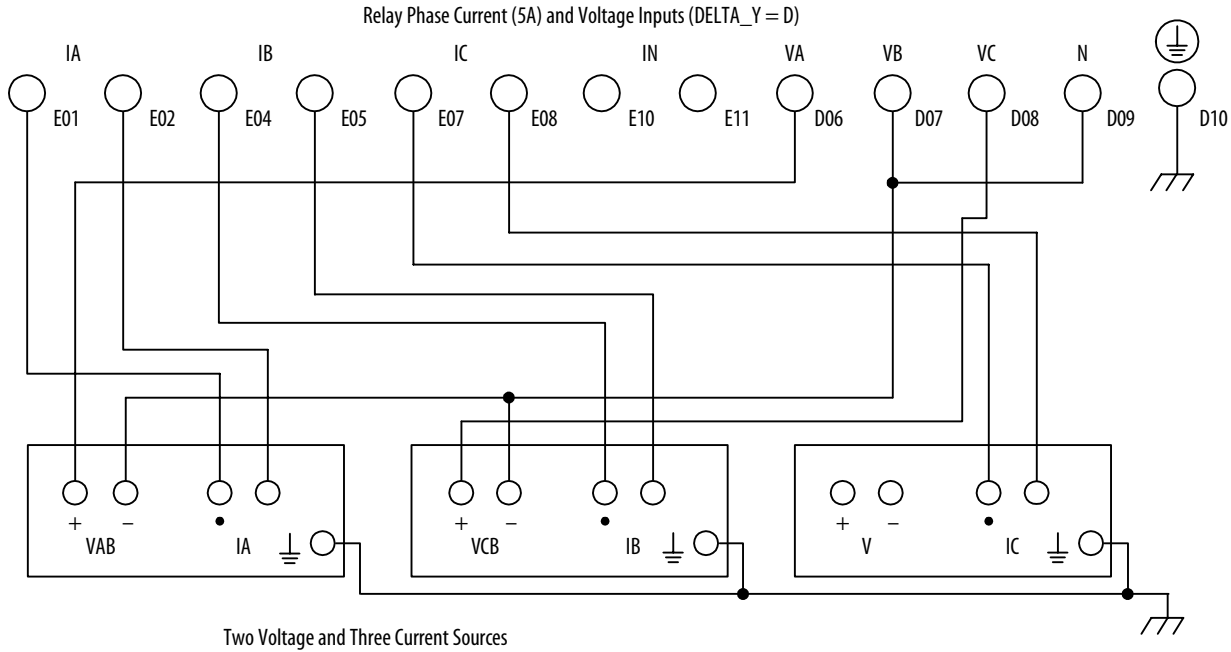

Figure 6.4 Two Voltage Source and Three Current Source Test Connections
Monitors equipped with ac voltage inputs (Models 0701101X and 0701111X) must be properly grounded for accurate voltage measurement.

Phase Current Measuring Accuracy

Step 1. Connect the current sources to the IA, IB, and IC current inputs (5 A or 1 A, as indicated by the ITAP setting).

Step 2. Using the front-panel Set Monitor\Monitor Elements\General Data functions or serial port **SHOW** command, note the CTR and PHROT settings.

Step 3. Set the current source phase angles to apply balanced three-phase currents. Refer to *Figure 6.1 on page 6.4* for the correct phase angles that depend on the PHROT setting.

Step 4. Turn on the current sources and increase the current applied to the monitor. Use the front-panel Meter Values\Instantaneous Meter function to view the monitor phase current measurements. For the applied current values shown in *Table 6.3*, the monitor should display phase current magnitudes equal to the applied current magnitude times the CTR setting.

Table 6.3 Phase Current Measuring Accuracy

|I| Applied (A secondary)	Expected Reading (CTR o |I| A primary)	A-Phase Reading (A primary)	B-Phase Reading (A primary)	C-Phase Reading (A primary)
0.5				
1.0				
1.5				
2.0				
2.5				
5.0				

Neutral Current Measuring Accuracy

Step 1. Connect one current source to the IN current input (5 A or 1 A, as indicated by the INTAP setting) to test neutral current measuring accuracy.

Step 2. Using the front-panel Set Monitor\Monitor Elements\General Data functions or serial port **SHOW** command, note the CTRN setting.

Step 3. Turn on the current source and increase the current applied to the monitor. Use the front-panel Meter Values\Instantaneous Meter function to view the monitor neutral current measurement. For the applied current values shown in *Table 6.4*, the monitor should display neutral current magnitudes equal to the applied current magnitude times the CTRN setting.

Table 6.4 Neutral Current Measuring Accuracy

|I| Applied (A secondary)	Expected Reading (CTRN o |I| A primary)	IN Reading (A primary)
0.05 • INTAP		
0.10 • INTAP		
0.25 • INTAP		
0.50 • INTAP		
1.00 • INTAP		
2.00 • INTAP		

Current Unbalance Element Accuracy

Step 1. Connect the current sources to the IA, IB, and IC current inputs (5 A or 1 A, as indicated by the ITAP setting).

Step 2. Using the front-panel Set Monitor\Monitor Elements\General Data and Set Monitor\Monitor Elements\Thermal Model Elements functions or serial port **SHOW** command, note the CTR, PHROT, and FLA settings.

Step 3. Set the current source phase angles to apply balanced three-phase currents. Refer to *Figure 6.1 on page 6.4* for the correct angles that depend on the PHROT setting.

Step 4. Turn on the current sources and increase the current applied to the monitor. Refer to *Table 6.5* to determine the appropriate magnitude for each phase current. Use the front-panel Meter Values\Instantaneous Meter function to view the unbalance current measurement (U/B = xx%). For each applied current value shown in *Table 6.5*, the monitor should display unbalance current magnitude equal to the expected reading percent shown.

Table 6.5 Current Unbalance Measuring Accuracy

|I| Applied (A secondary)	Expected Reading (%)	Actual Reading (%)
|IA| = 0.9 • FLA |IB| = FLA |IC| = FLA	7%	
|IA| = 0.75 • FLA |IB| = FLA |IC| = FLA	17%	
|IA| = FLA |IB| = 1.2 • FLA |IC| = 1.2 • FLA	12%	
|IA| = 0.9 • FLA |IB| = 1.1 • FLA |IC| = 1.1 • FLA	13%	

Motor Thermal Element Accuracy

NOTE: This test outlines steps to verify performance of any of the GENERIC thermal curves. When using the RATING or USER thermal element setting methods, the steps are similar, but the expected operating times will be different, depending on the settings you use.

Step 1. Connect the current sources to the IA, IB, and IC current inputs (5 A or 1 A, as indicated by the ITAP setting).

Step 2. Using the front-panel Set Monitor\Monitor Elements\Thermal Model Elements function or serial port **SHOW** command, note the PHROT, FLA, and CURVE settings. Set the Service Factor setting, SF equal to 1.15.

NOTE: Changing settings requires that you enter the Access Level 2 password. The factory password is 701.

Step 3. Set the current source phase angles to apply balanced three-phase currents. Refer to *Figure 6.1 on page 6.4* for the correct angles, which depend on the PHROT setting.

Step 4. Reset the motor thermal element using the front-panel Reset Thermal Model function.

NOTE: This function requires that you enter the Access Level 2 password. The factory password is 701.

Set the current sources to apply the test current shown in *Table 6.6*, then turn on the current sources together. Refer back to *Table 6.6* to determine the expected element operating time. For instance, when the setting CURVE is equal to 4, the thermal element should trip in 4•10 = 40 seconds when applied three-phase current equals three times the motor full load current setting, FLA. Use the front-panel Meter Values\Thermal & RTD Data function to view the estimated Time to Thermal Trip during each test.

NOTE: Reset the motor thermal model before each test run or the element will trip faster than expected.

Table 6.6 Thermal Element Expected Trip Times

Applied Current (A secondary)	Expected Time to Trip (s)	Measured Time to Trip (s)
1.2 • FLA	CURVE • 145.7	
1.5 • FLA	CURVE • 51.5	
2.0 • FLA	CURVE • 23.3	
3.0 • FLA	CURVE • 10.0	
4.0 • FLA	CURVE • 5.63	
5.0 • FLA	CURVE • 3.60	
6.0 • FLA	CURVE • 2.50	
7.0 • FLA	CURVE • 1.84	

Analog Output Accuracy

Step 1. Connect a dc milliammeter in series with the analog output terminals (B01, B02). Connect a PC to the monitor front-panel serial port using an appropriate serial cable. Using the SEL-701PC software terminal function or other terminal emulation software, establish communications with the monitor at Access Level 2 (see *Section 5: ASCII Serial Port Operation* for more details).

Step 2. Use the Access Level 2 **ANALOG** command to temporarily control the analog output. Refer to *Table 6.7*. Using the milliammeter reading, verify that the analog output is correct for each level.

Table 6.7 Analog Output Test

Desired % Output	ANALOG Command	Expected Meter Reading (0–1 mA Range)	Expected Meter Reading (0–20 mA Range)	Expected Meter Reading (4–20 mA Range)	Actual Meter Reading
0%	ANA 0 1	0.0 mA	0.0 mA	4.0 mA	
25%	ANA 25 1	0.25 mA	5.0 mA	8.0 mA	
50%	ANA 50 1	0.5 mA	10.0 mA	12.0 mA	
75%	ANA 75 1	0.75 mA	15.0 mA	16.0 mA	
100%	ANA 100 1	1.0 mA	20.0 mA	20.0 mA	

RTD Input Measuring Accuracy

Step 1. Use the front-panel Set Monitor\Monitor Elements\RTD Configuration function or serial port **SHOW** command to view the input RTD Type setting for each RTD input. Connect a variable resistance to each RTD input in turn. The temperatures given in *Table 6.8* through *Table 6.15* are based on the RTD type and the value of the resistance. Referring to these tables, change the resistance applied to each input until the appropriate temperature is displayed.

Step 2. Use the front-panel Meter Values\Thermal & RTD Data function or serial port **METER T** command to view the present temperature measured by the monitor RTD input. The temperature displayed should be ±2°C or ±4°F from the temperature represented by the variable resistance.

Table 6.8 100-Ohm Platinum RTD Type (RTDs 1–6)

Resistance Value(ohms)	Expected Temperature Reading(°C)	Expected Temperature Reading(°F)	RTD Temperatures					
			1	2	3	4	5	6
80.31	-50	-58						
100.00	0	32						
119.39	50	122						
138.50	100	212						
157.32	150	302						
175.84	200	392						
190.45	240	464						

Table 6.9 100-Ohm Platinum RTD Type (RTDs 7-12)

Resistance Value(ohms)	Expected Temperature Reading(°C)	Expected Temperature Reading(°F)	RTD Temperatures					
			7	8	9	10	11	12
80.31	-50	-58						
100.00	0	32						
119.39	50	122						
138.50	100	212						
157.32	150	302						
175.84	200	392						
190.45	240	464						

Table 6.10 120-Ohm Nickel RTD Type (RTDs 1–6)

Resistance Value(ohms)	Expected Temperature Reading(°C)	Expected Temperature Reading(°F)	RTD Temperatures					
			1	2	3	4	5	6
86.17	-50	-58						
120.00	0	32						
157.74	50	122						
200.64	100	212						
248.95	150	302						
303.64	200	392						
353.14	240	464						

Table 6.11 120-Ohm Nickel RTD Type (RTDs 7–12)

Resistance Value(ohms)	Expected Temperature Reading(°C)	Expected Temperature Reading(°F)	RTD Temperatures					
			7	8	9	10	11	12
86.17	-50	-58						
120.00	0	32						
157.74	50	122						
200.64	100	212						
248.95	150	302						
303.64	200	392						
353.14	240	464						

Table 6.12 100-Ohm Nickel RTD Type (RTDs 1–6)

Resistance Value(ohms)	Expected Temperature Reading(°C)	Expected Temperature Reading(°F)	RTD Temperatures					
			1	2	3	4	5	6
71.81	-50	-58						
100.00	0	32						
131.45	50	122						
167.20	100	212						
207.45	150	302						
252.88	200	392						
294.28	240	464						

Table 6.13 100-Ohm Nickel RTD Type (RTDs 7–12)

Resistance Value(ohms)	Expected Temperature Reading(°C)	Expected Temperature Reading(°F)	RTD Temperatures					
			7	8	9	10	11	12
71.81	-50	-58						
100.00	0	32						
131.45	50	122						
167.20	100	212						
207.45	150	302						
252.88	200	392						
294.28	240	464						

Table 6.14 10-Ohm Copper RTD Type (RTDs 1–6)

Resistance Value(ohms)	Expected Temperature Reading(°C)	Expected Temperature Reading(°F)	RTD Temperatures					
			1	2	3	4	5	6
7.10	-50	-58						
9.04	0	32						
10.97	50	122						
12.90	100	212						
14.83	150	302						
16.78	200	392						
18.34	240	464						

Table 6.15 10-Ohm copper RTD Type (RTDs 7–12)

Resistance Value(ohms)	Expected Temperature Reading(°C)	Expected Temperature Reading(°F)	RTD Temperatures					
			7	8	9	10	11	12
7.10	-50	-58						
9.04	0	32						
10.97	50	122						
12.90	100	212						
14.83	150	302						
16.78	200	392						
18.34	240	464						

Power & Power Factor Measuring Accuracy

Accuracy Test, Wye Voltages

Step 1. Connect the current sources to the IA, IB, and IC current inputs (5 A or 1 A, as indicated by the ITAP setting). Connect the voltage sources to the VA, VB, and VC inputs in wye configuration. Refer to *Figure 6.3 on page 6.9*.

Step 2. Using the front-panel Set Monitor\Monitor Elements\General Data function or serial port **SHOW** command, note the CTR, PTR, and PHROT settings.

Step 3. Referring to *Table 6.16*, set the current and voltage source magnitudes. The phase angles you should apply depend on the PHROT setting. Use the front-panel Meter Values\Instantaneous Meter function to verify the monitor measurements.

Table 6.16 Power Measuring Accuracy Test Values, Wye Voltages

Applied Currents and Voltages	Real Power (kW)	Reactive Power (kVar)	Power Factor (pf)
PHROT = ABC Ia = 2.5A∠–26° Ib = 2.5A∠–146° Ic = 2.5A∠94° Va = 67V∠0° Vb = 67V∠–120° Vc = 67V∠120°	**Expected**: P = 0.4523 • CTR • PTR **Measured**:	**Expected**: Q = 0.2211 • CTR • PTR **Measured**:	**Expected**: pf = 0.90 lag **Measured**:
PHROT = ACB Ia = 2.5A∠–26° Ib = 2.5A∠94° Ic = 2.5A∠–146° Va = 67V∠0° Vb = 67V∠120° Vc = 67V∠–120°	**Expected**: P = 0.4523 • CTR • PTR **Measured**:	**Expected**: Q = 0.2211 • CTR • PTR **Measured**:	**Expected**: pf = 0.90 lag **Measured**:

Accuracy Test, Delta Voltages

Step 1. Connect the current sources to the IA, IB, and IC current inputs (5 A or 1 A, as indicated by the ITAP setting). Connect the voltage sources to the voltage inputs in delta configuration. Refer to *Figure 6.4 on page 6.10*.

Step 2. Using the front-panel Set Monitor\Monitor Elements\General Data function or serial port **SHOW** command, note the CTR, PTR, and PHROT settings.

Step 3. Referring to *Figure 6.4 on page 6.10*, set the current and voltage source magnitudes. The phase angles you should apply depend on the PHROT setting. Use the front-panel Meter Values\Instantaneous Meter function to verify the monitor measurements.

Table 6.17 Power Measuring Accuracy Test Values, Delta Voltages

Applied Currents and Voltages	Real Power (kW)	Reactive Power (kVar)	Power Factor (pf)
PHROT = ABC Ia = 2.5A∠–26° Ib = 2.5A∠–146° Ic = 2.5A∠94° Vab = 120V∠30° Vcb = 120V∠90°	**Expected**: P = 0.4677 • CTR • PTR **Measured**:	**Expected**: Q = 0.2286 • CTR • PTR **Measured**:	**Expected**: pf = 0.90 lag **Measured**:
PHROT = ACB Ia = 2.5A∠–26° Ib = 2.5A∠94 Ic = 2.5A∠–146° Vab = 120V∠–30° Vcb = 120V∠–90°	**Expected**: P = 0.4677 • CTR • PTR **Measured**:	**Expected**: Q = 0.2286 • CTR • PTR **Measured**:	**Expected**: pf = 0.90 lag **Measured**:

This page intentionally left blank

Section 7

Metering & Monitoring

Introduction

The SEL-701-1 Monitor features metering functions to display the present values of current and (if included) voltage and RTD measurements. The monitor provides several methods to read the present meter values, including:

- Rotating front-panel display.
- Front-panel menu.
- EIA-232 serial port (using ASCII text command).
- Rear-panel EIA-232 (using ASCII text command) or EIA-485 port (using Modbus® protocol).
- Analog output.

Motor load monitoring and trending are possible using the Load Profile function. The monitor automatically configures itself to save available meter values every 15 minutes for 34 or 48 days.

For preventive maintenance purposes, the SEL-701-1 Monitor provides a motor operating statistics report, available using the front panel or serial port.

Also helpful in preventive maintenance tasks, the SEL-701-1 Monitor calculates and stores motor starting information. The monitor retains motor start reports for the five latest motor starts. The motor start trending function stores motor start averages for the last eighteen 30-day periods.

Metering

SEL-701-1 Monitor meter data fall into several categories:

- Instantaneous metering.
- Demand metering.
- Max/Min metering.
- Thermal metering.
- Energy metering.

Details on each of the meter data types are shown below. *Section 4: Front-Panel Operation* and *Section 5: ASCII Serial Port Operation* describe how to access the various types of meter data using the monitor front panel and serial ports.

Instantaneous Metering

Table 7.1 Measured Values

Relay Option	Meter Values
All Models	Ia, Ib, Ic, In Fundamental Magnitudes and Phase Angles; RMS Values Ig Residual Current Fundamental Magnitude and Phase Angle Negative-Sequence Current (3I2) Magnitude and Phase Angle Frequency % Unbalance
With Voltage Inputs (Relay Models 0701101 and 0701111)	Vab, Vbc, Vca Fundamental Magnitudes and Phase Angles; RMS Values Vg Residual Voltage Fundamental Magnitude and Phase Angle(wye-connection only) Negative-Sequence Magnitude and Phase Angle kW Fundamental and RMS Values HP, kVAR, kVA, and pf

The monitor displays both the fundamental frequency component and the RMS values of several measurands. The fundamental frequency signal has a defined magnitude and phase angle with respect to the other quantities. Reported phase angle is associated with the fundamental frequency magnitude, referenced to Vab or Ia at 0 degrees. RMS quantities do not have a defined phase angle. Reactive and apparent powers (kVAR and kVA) are not defined for RMS measurement.

Demand Metering

Table 7.2 Demand Meter Values

Relay Option	Demand Meter Values
All Models	Ia, Ib, Ic, In Fundamental Demand Magnitudes Ig Residual Current Fundamental Demand Magnitude Negative-Sequence Current (3I2) Fundamental Demand Magnitude
With Voltage Inputs (Relay Models 0701101 and 0701111)	kW, kVAR, kVA Fundamental Demand Magnitudes

Using the instantaneous fundamental current and power quantities (optional), the monitor calculates new demand quantities every two seconds. The monitor uses a thermal demand calculation algorithm with a settable time constant. You enter the Demand Meter Time Constant as a monitor setting. The demand algorithm yields an output equal to 0.9 times the input quantity Demand Meter Time Constant minutes after the signal was applied, assuming the demand was reset initially. The demand metering function also records the peak values of each demand quantity.

Max/Min Metering

Table 7.3 Max/Min Recorded Value

Relay Option	Max/Min Values
All Models	Ia, Ib, Ic, In, Ig Fundamental Magnitudes
With RTD Monitoring (Relay Models 0701110 and 0701111) or when the SEL-2600 RTD Module is connected	Up to 11 or 12 RTD Input Temperatures
With Voltage Inputs (Relay Models 0701101 and 0701101)	Vab, Vbc, Vca, Vg (wye-connection only) Fundamental Magnitudes kW, kVAR, kVA Fundamental Magnitudes

The monitor records maximum and minimum instantaneous quantities while the following conditions are true:

- The motor is running.
- Phase currents are greater than 3% of the Phase CT Secondary Rating, ITAP setting.
- Phase voltages, if included, are greater than 13 Vac.

Residual voltage is recorded only if three phase-neutral voltages are connected to the monitor and residual voltage is greater than 3 Vac. RTD temperatures are only recorded if optional RTDs are connected and the connected RTD has not failed open or short.

Thermal Metering

Table 7.4 Thermal Meter Values

Relay Option	Thermal Values
All Models	% Full Load Amps % Thermal Capacity Used Calculated Time to Thermal Trip Minutes Since Last Start Starts This Hour
With RTD Monitoring (Relay Models 0701101 and 0701111) or when the SEL-2600 RTD Module is connected	All RTD Temperatures RTD % Thermal Capacity

The thermal metering function reports the present values of the RTD input temperatures and several quantities related to the motor thermal protection function.

NOTE: If the setting SETMETH=OFF, the monitor will always report % Thermal Capacity=999.9 and Calculated Time to Thermal Trip (Seconds)=9999

The thermal meter function also reports the state of connected RTDs if any have failed. Failure messages are shown in *Table 7.5*.

Table 7.5 RTD Input Status Messages

Message	Status
Open	RTD leads open
Short	RTD leads shorted
Comm. Fail	Fiber-optic communications to SEL-2600 RTD Module have failed
Stat Fail	SEL-2600 RTD Module self-test status failure

Energy Metering

Table 7.6 Energy Meter Values

Relay Option	Energy Values
Without Voltage Inputs (Relay Models 0701100 and 0701110)	None
With Voltage Inputs (Relay Models 0701101 and 0701111)	MWhr, MVARhr-in, MVARhr-out, and MVAhr Magnitudes

When voltage inputs are selected and connected, the monitor records the real, reactive, and apparent energy consumed by the motor.

Power Measurement Conventions

The SEL-701-1 Monitor uses the IEEE convention for power measurement assuming motor action. The implications of this convention are described by *Figure 7.1*.

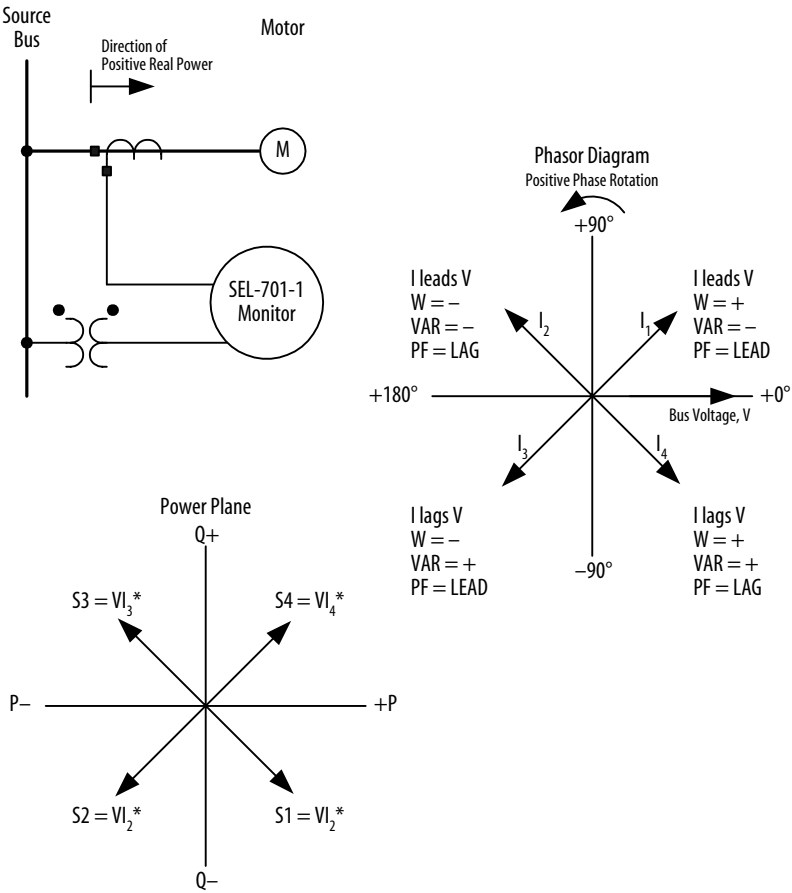

Figure 7.1 Power Measurement Conventions.

In the SEL-701-1 Monitor, reported positive real power and energy are always into the motor.

Load Profiling

The SEL-701-1 Monitor includes a built-in load profiling function that does not require any configuration. The monitor automatically records selected quantities into nonvolatile memory every 15 minutes, synchronized to the quarter-hour. The monitor memory is sized to hold data for the past 34 days for monitors equipped with voltage inputs or 48 days for monitors not equipped with voltage inputs before beginning to write over the oldest data. Download the load profile data using the serial port **LDP** command described in *Section 5: ASCII Serial Port Operation*.

Load profile data retained depends on the monitor options you select. *Table 7.7* lists the load profile data retained for each monitor option.

Table 7.7 Load Profile Values

Relay Option	Load Profile Values
All Models	Ia, Ib, Ic, In Fundamental Magnitudes % Thermal Capacity* % Unbalance Frequency
With RTD Monitoring (Relay Models 0701110 and 0701111) or when the SEL-2600 RTD Module is connected	Hottest Winding RTD Temperature Hottest Bearing RTD Temperature Ambient Temperature
With Voltage Inputs (Relay Models 0701101 and 0701111)	Vab, Vbc, Vca Fundamental Magnitudes kW, kVAR, and kVA

*If the setting SETMETH=OFF, the monitor will always report %Thermal Capacity=1000

Figure 7.2 shows an example **LDP** serial port command response.

```
=>ldp

SEL-701-1          Date: 08/15/2001    Time: 16:32:38.364
MONITOR

Record Number,Date,Time,Ia,Ib,Ic,In,% Thermal Capacity,% Current Unbalance,Frequ
ency,Winding RTD,Bearing RTD,Ambient RTD,Vab,Vbc,Vca,kW,kVAR,kVA
3,08/15/2001,16:00:00,190,192,191,0,69,0,60.0,150,112,78,458,460,457,156,44,162
2,08/15/2001,16:15:00,192,194,190,0,70,0,60.0,151,112,79,460,464,460,156,44,161
1,08/15/2001,16:30:00,190,190,192,0,69,0,60.0,150,111,78,458,462,463,156,44,162

=>
```

Figure 7.2 LDP Command Response.

Motor Operating Statistics

The SEL-701-1 Monitor retains useful information regarding the protected motor. The serial port MOTOR command and front-panel Motor Statistics commands make the stored data available. The data also appear in the Modbus memory map. Items included in the report are shown below.

NOTE: While the monitor power is off, the elapsed timers do not advance. If monitor power is off for a significant time, the elapsed calendar time will not match the elapsed time recorded by the monitor.

Times & Totals

The monitor records the total time that the motor is running and stopped, then divides the running time by the total time to indicate a percent time running. These figures provide an indication of the amount of use that the motor is receiving. The monitor also records the total megawatt-hours consumed by the motor and the total number of motor starts that have taken place.

Average & Peak Data

To help you discern operational trends early, the monitor records the average and peak of a number of key measurements, listed below. Some of these measurements are dependent on the presence of optional voltage inputs and RTD inputs. The monitor stores average and peak values of:

- Starting time in seconds.
- Starting current.
- Minimum starting voltage.
- Starting % Thermal Capacity
  (if the setting SETMETH=OFF, the monitor will always report 0.0).
- Running % Thermal Capacity
  (if the setting SETMETH=OFF, the monitor will always report 999.9).
- RTD % Thermal Capacity.
- Running current.
- Running kW, kVAR, and kVA.
- Hottest winding RTD temperature.
- Hottest bearing RTD temperature.
- Ambient RTD temperature.
- Hottest other RTD temperature.

Learned Parameters

The SEL-701-1 Monitor can learn two protection parameters of the protected motor. When you connect the monitor to monitor at least one motor winding RTD and the ambient temperature, the monitor can learn the cooling time of the protected motor when it is stopped. The monitor can also learn the thermal element thermal capacity used when the motor starts. The motor statistics report includes both of these learned parameters.

Alarm and Trip Counters

The monitor records the number and type of element alarms and trips that occur for the protected motor. The reported trip counter types are listed below. If the monitor does not include optional voltage or RTD inputs, the motor statistics report does not include counter types for those elements. Those items marked with an ([A]) also have alarm counters.

- Thermal Element[A]
- Locked Rotor[A]
- Load Loss[A]
- Load Jam
- Unbalance Current[A]
- Phase Fault
- Ground Fault
- Speed Switch
- Undervoltage
- Overvoltage
- Underpower[A]
- Power Factor[A]
- Reactive Power[A]
- Phase Reversal
- Underfrequency
- Overfrequency
- RTD[A]
- Total[A]

```
=>MOTOR

SEL-701-1             Date: 08/15/2001    Time: 16:00:14.625
MONITOR

Operating History, elapsed time in ddd:hh:mm      Since: 08/15/2001 10:56:15
Running time:      >    0:01:58
Stopped time:           54:23:47
Time running:           0.1%

Total MWhr:                           0.4

Number of starts:                    10


                                 Average          Peak
Starting time:                       7.6            10.0
Starting current (A):                2762.1         3014.0
Min starting voltage (V):            476            463
Starting % thermal capacity:         76.5           84.0
Running % thermal capacity:          60.5           68.8
Rtd % thermal capacity:              45.3           54.2
Running current (A):                 70.1           75.0
Running kW:                          54.9           58.4
Running kVARin:                      15.2           15.7
Running kVARout:                     0.9            1.3
Running kVA:                         56.8           57.9
Hottest winding RTD temp (F):      145            164
Hottest bearing RTD temp (F):       95            120
Ambient RTD temp (F):               79             98
Hottest other RTD temp (F):        NA

Learned Motor Parameters
Stopped Cooling Time:             486
Starting Thermal Capacity:        62

                       Alarms      Trips
Thermal:                   0          2
Locked rotor:              2          2
Load loss:                 0          0
Load jam:                             3
Unbalance current:         1          1
Phase fault:                          0
Ground fault:                         0
Speed switch:                         0
Undervoltage:                         0
Overvoltage:                         36
Underpower:                0          0
Power factor:              0          0
Reactive power:            0          0
Phase reversal:                       0
Underfrequency:                       0
Overfrequency:                        0
RTD:                      28          0
Total:                    31         44
=>
```

Figure 7.3 MOTOR Command Example.

Motor Start Report

Each time the monitor detects a motor start, it stores a motor start report. The five latest motor start reports are stored in nonvolatile memory. View any of the five latest motor start reports using the serial port **MSR n** command, where n = 1–5. Each report consists of two parts: a summary and the start data.

Summary Data

Each motor start report contains a summary. The summary shows the following information:

- Date and time of the start.
- Number of motor starts since last reset.
- Motor acceleration time.
- Starting % Thermal Capacity
  (if the setting SETMETH=OFF, the monitor will always report 0.0).
- Maximum Starting Current.
- Minimum Starting Voltage, if voltages are present.

The motor acceleration time is calculated from the time the phase current magnitude exceeds 2.5 times Full Load Amps until the current magnitude falls below that level. The Starting % Thermal Capacity value is the thermal element capacity used at the end of the start, expressed in percent of the trip value.

Start Data

The motor start data is taken every 5 cycles for 3600 cycles, starting 5 cycles after the phase current magnitude exceeds 2.5 times Full Load Amps. The monitor stores the following data every 5 cycles:

- Magnitude of A-, B-, and C-phase currents.
- Magnitude of neutral current, $I_{N.}$
- % Thermal Capacity
  (if the setting SETMETH=OFF, the monitor will always report 0.0).
- Magnitude of AB, BC, and CA phase-to-phase voltages, if included.

The start data is output in a comma-delimited text format for easy integration into computer spreadsheets for motor starting analysis.

Report Format

The motor start report comma delimited format makes the data easy to use with spreadsheets or other visualization software. Use the **MSR F** serial port command to

view or capture the report format. The monitor responds to the **MSR F** serial port command by sending a motor start report whose data fields are filled with zeroes. Executing the **MSR F** command does not affect the statistical data stored by the monitor. *Figure 7.4* shows data from an example Motor Start Report.

```
=>msr

SEL-701-1               Date: 08/15/2001    Time: 17:13:04.295
MONITOR

FID=SEL-701-1-R300-V11xxx-Z100100-D20010815     CID=4A50

Date of Motor Start:                        08/15/2001
Time of Motor Start:                      13:59:28.618
Starts Since Last Reset:                             7
Acceleration Time (s):                             8.0
Starting % Thermal Capacity:                        72
Maximum Starting Current (A pri):                 3001
Minimum Starting Voltage (V pri):                 4702
Cycle,Ia (A pri),Ib (A pri),Ic (A pri),In (A pri),Vab (V pri),Vbc (V pri),Vca (V pri),% Thermal
Capacity
5,2999,2994,2990,0,4705,4706,4705,17
10,2999,2993,2990,0,4708,4710,4707,18
15,2999,2993,2989,0,4702,4706,4704,18
20,3000,2993,2989,0,4708,4710,4707,19
    .
    .
    .
470,2884,2882,2880,0,4720,4718,4716,71
475,2878,2880,2878,0,4719,4716,4718,71
480,1017,1008,988,0,4750,4752,4754,72
485,348,350,347,0,4780,4782,4784,72
490,348,349,347,0,4782,4782,4784,72
    .
    .
    .
3595,347,348,347,0,4782,4784,4782,70
3600,348,348,348,0,4780,4782,4784,70
```

Figure 7.4 Motor Start Report Example.

Motor Start Trending

Each time the monitor stores a motor start report, it adds the motor start summary data (described in *Summary Data on page 7.11*) to the motor start trending buffer. The motor start trending function tracks motor start summary data for the past eighteen 30-day periods. For each 30-day interval, the monitor records the date the interval began, the total number of starts in the interval, and the averages of the following quantities:

- Motor Acceleration Time.
- Starting % Thermal Capacity
  (if the setting SETMETH=OFF, the monitor will always report 0.0).
- Maximum Starting Current.
- Minimum Starting Voltage (if voltages are present).

View the motor start trending data using the serial port **MST** command.

NOTE: All the trend data collected each day are added to nonvolatile memory at midnight. If monitor power is removed, the information collected between midnight and power removal is lost.

Figure 7.5 shows data from an example Motor Start Trend Report.

```
=>mst

SEL-701-1                Date: 08/15/2001    Time: 10:35:49.755
MONITOR

            Began     Number    Accel     Starting  Maximum   Minimum
Record       on         of      Time      % Thermal Current   Voltage
Number      Date      Starts     (s)      Capacity  (A pri)  (VL-L pri)
   1    08/15/2001     25       9.8       73        3002      4706
   2        ---        ---      ---        ---       ---       ---
   3        ---        ---      ---        ---       ---       ---
   4        ---        ---      ---        ---       ---       ---
   5        ---        ---      ---        ---       ---       ---
   6        ---        ---      ---        ---       ---       ---
   7        ---        ---      ---        ---       ---       ---
   8        ---        ---      ---        ---       ---       ---
   9        ---        ---      ---        ---       ---       ---
  10        ---        ---      ---        ---       ---       ---
  11        ---        ---      ---        ---       ---       ---
  12        ---        ---      ---        ---       ---       ---
  13        ---        ---      ---        ---       ---       ---
  14        ---        ---      ---        ---       ---       ---
  15        ---        ---      ---        ---       ---       ---
  16        ---        ---      ---        ---       ---       ---
  17        ---        ---      ---        ---       ---       ---
  18        ---        ---      ---        ---       ---       ---
=>
```

Figure 7.5 Motor Start Trending Report Example.

This page intentionally left blank

Section 8

Event Analysis

Introduction

The SEL-701-1 Monitor provides several facilities to analyze the cause of monitor operations. Use these tools to help diagnose the cause of the monitor operation and more quickly restore the protected motor to service. Each tool, listed below, provides increasing detail regarding the causes of a monitor operation.

- Front-panel target LEDs
- Front-panel display trip messages
- Front-panel history data menu
- Serial port text and oscillographic event reports
- Serial port sequential events recorder (SER) function

Front-Panel Target LEDs

Each front-panel target LED (except the Enabled LED) is controlled through a SELOGIC® control equation (LED1 through LED7). However, if the setting FACTLED = Y, the front-panel LEDs will operate as shown in *Table 8.1*.

Table 8.1 SEL-701-1 Monitor Factory Front-Panel Target LED Definitions

LED Label	Definition
Enabled	Illuminated whenever the monitor is in service. If this LED is not illuminated, the monitor is out of service. Verify monitor control power and self-test status.
LED1 (Thermal Overload)	This LED flashes when the thermal element reaches the alarm level, or if any monitored, healthy RTD exceeds its alarm temperature.
	This LED remains on steadily after a thermal element trip, load jam trip, speed switch trip, or RTD temperature trip.
LED2 (Overcurrent)	This LED remains on steadily after a trip due to a short circuit fault detected by a phase, negative-sequence, residual, or neutral overcurrent element.
LED3 (Unbalance)	This LED flashes when the current unbalance alarm element picks up.
	This LED remains on steadily after a trip while the current unbalance element is picked up or after a phase reversal trip.
LED4 (Load Loss)	This LED flashes when a load loss alarm occurs or if the underpower alarm element picks up.
	This LED remains on steadily after a load loss trip or a trip while the underpower element is picked up.
LED5 (Voltage)	This LED flashes when a power factor or reactive power alarm occurs.
	This LED remains on steadily after a power factor or reactive power trip or a trip that occurs while an undervoltage or overvoltage element is picked up.
LED6 (Frequency)	This LED remains on steadily after a trip that occurs while an over- or underfrequency element is picked up.
LED7 (Motor Energized)	This LED remains off while the motor is stopped, flashes while the motor is starting, and remains on while the motor is running.

The LEDs are programmable on the SEL-701-1 Monitor. By setting FACTLOG and FACTLED to N, a SELOGIC control equation can be entered for each LED through settings LED1 through LED7. See *Figure 3.5 on page 3.46* for the location of LED1 through LED7.

Resetting Front-Panel Targets

To reset the front-panel tripping targets, select the Reset Trip/Targets function from the front-panel display main menu, or execute the serial port **TARGET R** command. When you reset the monitor targets using one of these methods:

- All tripping LEDs are extinguished if the trip condition has vanished and no lockout conditions remain.
- The front-panel display trip message (described in *Front-Panel Messages on page 8.4*) is cleared.

NOTE: If you try to reset the monitor targets and one or more of the red LEDs remains lit after the target reset command, the tripping condition or a lockout condition is still present. Correct the condition that caused the monitor to trip and try again.

NOTE: The factory default monitor logic causes monitor trip signals to remain latched after the fault is cleared until you reset the monitor targets. If this performance is not acceptable for your application, refer to *Appendix B: SELogic® Control Equations and Monitor Logic* for instructions on changing the factory default monitor logic settings.

NOTE: If FACTLED is set to N, the LEDs will not reset/clear until the SELOGIC control equation deasserts.

When you reset the LEDs using the front-panel menu function, the monitor illuminates all the LEDs as a lamp test before clearing the targets.

Motor Energized LED

The Motor Energized LED is dark, flashes, or remains on to indicate the stopped, starting, or running condition of the motor. The monitor determines the motor condition by measuring the positive-sequence current (I_1) and comparing the magnitude of the current to several thresholds defined by the Full Load Amps (FLA) setting.

STOPPED. When motor positive-sequence current is less than 10% of the Full Load Amps setting, the monitor declares the motor stopped. The Motor Energized LED is dark.

STARTING. If the motor was stopped and now positive-sequence current is greater than 250% of the Full Load Amps setting, the monitor declares the motor starting. The Motor Energized LED flashes.

RUNNING. If the positive-sequence current is between 10% and 250% of the Full Load Amps setting, the monitor declares the motor running. The Motor Energized LED remains on.

Front-Panel Messages

Each time the monitor trips in response to a fault, it automatically displays a front-panel message. The message describes the type of trip that occurred. Trip messages include:

- Thermal Trip.
- Locked Rotor Trip.
- Load-Loss Trip.
- Load-Jam Trip.
- Unbalance Trip.
- Phase Fault Trip.
- Ground Fault Trip.
- Speed Switch Trip.
- Undervoltage Trip.
- Overvoltage Trip.
- Underpower Trip.
- Power Factor Trip.
- Reactive Power Trip.
- Phase Reversal Trip.
- Underfrequency Trip.
- Overfrequency Trip.
- RTD Trip.

The monitor clears the trip-type message when you reset the tripping target LEDs.

History Data & Event Summaries

Each time the SEL-701-1 Monitor trips, and in response to other selected conditions, the monitor captures motor current, voltage (if included), RTD (if included), protection element, contact input, and contact output information. This collection of data is called an event report and is described in detail in *Event Reports on page 8.7*.

The monitor stores the 13 most recent event reports and their summaries in nonvolatile memory. These reports are numbered 1 through 13, older reports having higher numbers. When the monitor stores a new report, it discards the oldest report if 13 reports are already in memory.

The monitor also stores an event summary associated with each event report. Each event summary contains selected data acquired at the instant the monitor tripped or at the instant the event was triggered if a trip did not occur during the event. Use the summary data to help discern the cause of monitor trip operations before you review the full event report.

View the present collection of event summaries using the front-panel History Data menu selection or the serial port **HISTORY** command. Each event summary contains:

- The type of event, from the list of event type strings in *footnote d on page C.54* in *Appendix C: Modbus® RTU Communications Protocol*.
- The event number, date, and time.
- The system frequency.
- The % Thermal Capacity used.
- The % Unbalance Current.
- The magnitudes of the phase, neutral, residual, and negative-sequence currents.
- The temperatures of the hottest winding, bearing, ambient, and other RTDs, if included.
- The magnitudes of the phase-to-phase voltages, if included.
- The magnitudes of the real power, reactive power, and power factor, if voltages are included.

The following table provides a list of event triggering commands and their equivalent names reported in the Event/History reports. For example, if the event is stored in response to execution of the serial port **TRIGGER** command, the Event/History report will list the event type as TRIG.

Event Trigger	Event Type
TRIGGER Command	TRIG
PULSE Command	PULSE
RISING EDGE of ER SELOGIC control equation	ER
STOP Command	**STOP** COMMAND

If the event was stored in response to a rising edge of the TRIP SELOGIC control equation, but the trip type doesn't correspond to any of the trip messages in *Front-Panel Messages on page 8.4*, TRIP will be the listed trip type.

Event Reports

The SEL-701-1 Monitor captures and stores detailed information concerning the monitor measurements, protection element status, and contact input/output status. The monitor stores the 14 most recent event reports in nonvolatile memory. Each report is numbered; older reports have higher numbers. After the monitor reaches the storage limit, it discards the oldest report every time it captures a new report.

If you cannot determine the root cause of a monitor trip operation after using the analysis tools described earlier in this section, analyze the event report associated with the trip. Each event report contains the following information:

- Date and time of the event.
- Fifteen (15) cycles of current, voltage, protection element, input, and output data.
- Event summary data, described in *History Data & Event Summaries on page 8.5*.
- Monitor settings.

The following discussion covers these areas:

- What causes the monitor to save an event report?
- How do I retrieve new event data?
- What does the event data mean?

Event Report Triggering

The monitor triggers an event report when any of the following occur:

- The monitor trips.
- A user executes the serial port **TRIGGER** command or serial port or front-panel **PULSE** command or **STOP** command.

Any of the programmable event triggering conditions occur (see below).

The factory default logic settings include settings that cause the monitor to trigger an event report when any of the following conditions occur:

- Thermal Element Alarm.
- Load-Loss Alarm.
- Current Unbalance Alarm.
- Underpower Element Alarm.
- Reactive Power Element Alarm.
- Power Factor Element Alarm.
- Dropout of any Over- or Underfrequency Element.

If your application requires different performance, you can change these settings by following the steps described in *Appendix B: SELogic® Control Equations and Monitor Logic*.

Retrieving Event Reports

Use the serial port **EVENT** command to retrieve event reports. There are several options for customizing the report format. The general command format is shown in *Table 8.2*. *Table 8.3* lists example EVE commands.

Table 8.2 Event Commands

Event n R	
Where:	
n	Event number (1-13). Defaults to 1 if not listed, where 1 is the most recent event. If you request an event that does not exist, the relay responds "Invalid Event."
R	Specifies the unfiltered (raw) event report. Displays 16 samples per cycle.

Table 8.3 EVE Command Options

Serial Port Command	Description
EVE	Display the most recent event report at 1/4-cycle resolution.
EVE 2	Display the second event report at 1/4-cycle resolution.
EVE R	Display most recent report at 1/16-cycle resolution; analog data are not digitally filtered (raw).

The SEL-701-1 Monitor also provides a facility to allow you to download event report data using Modbus® protocol and the rear-panel serial port. For more information, see *Appendix C: Modbus® RTU Communications Protocol*.

Event Report Data Column Definitions

The event report data is arranged in columns and rows. Each column includes a single type of data such as A-phase current samples or the state of two output contacts. Each row displays the measurements and results of a single instant in time. Event reports you view using the **EVENT** command contain four samples per power system cycle. In event reports, time runs down the page; first occurrences are shown at the top of the page, final conditions at the bottom. Events contain 4 cycles of pretrigger data and 11 cycles of posttrigger data to show the motor and system conditions before, during, and after the fault. Definitions and descriptions of the event report data columns are shown in *Table 8.4* and *Table 8.5*.

Current & Voltage Columns

Table 8.4 summarizes the event report current and voltage columns.

Table 8.4 Event Report Current and Voltage Columns

Column Heading	Definition
IA	Current measured by channel IA (primary A)
IB	Current measured by channel IB (primary A)
IC	Current measured by channel IC (primary A)
IG	Residual current (IA + IB + IC, primary A)
IN	Current measured by channel IN (primary A)
VA or VAB	Voltage measured by channel VA or VAB (primary V)
VB or VBC	Voltage measured by channel VB or VBC (primary V)
VC or VCA	Voltage measured by channel VC or calculated from VAB and VBC (primary V)

Output, Input, & Element Columns

Table 8.5 summarizes the event report output, input, and monitor element control columns. Not all monitors include all the element types.

Table 8.5 Output, Input, and Element Event Report Columns *(Sheet 1 of 3)*

Column Heading	Symbol	Definition
All columns	•	Element/input/output not picked up or not asserted.
Motor	S	Motor starting.
	R	Motor running.
	•	Motor stopped.
Load	J	Load Jam Trip picked up.
	l	Load Loss Alarm picked up.
	L	Load Loss Trip picked up.
46	A	Current Unbalance Alarm picked up.
	T	Current Unbalance Trip picked up.
47	T	Phase Reversal Trip.
49	A	Thermal Element Alarm picked up.
	T	Thermal Element Trip picked up.

Table 8.5 Output, Input, and Element Event Report Columns *(Sheet 2 of 3)*

Column Heading	Symbol	Definition
50 O/C	Q	Negative-Sequence Definite-Time Overcurrent Element picked up and time delay expired.
	1	Level 1 Phase Definite-Time Overcurrent Element picked up and time delay expired.
	2	Level 2 Phase Definite-Time Overcurrent Element picked up and time delay expired.
	b	Both Level 1 and Level 2 Phase Overcurrent Elements picked up and time delays expired.
50G O/C	1	Level 1 Residual OvercurrentElement picked up and time delay expired.
	2	Level 2 Residual OvercurrentElement picked up and time delay expired.
	b	Both Level 1 and Level 2 Residual OvercurrentElements picked up and time delays expired.
Wdg	w	A Winding RTD has exceeded the alarm temperature.
	W	One or two Winding RTDs have exceeded the trip temperature.
Brg	b	A Bearing RTD has exceeded the alarm temperature.
	B	One or two Bearing RTDs have exceeded the trip temperature.
Oth RTD	o	An Other RTD has exceeded the alarm temperature.
	O	One or two Other RTDs have exceeded the trip temperature.
Amb RTD	a	The Ambient RTD has exceeded the alarm temperature.
	A	The Ambient RTD has exceeded the trip temperature.
Out T1	T	TRIP contact output asserted.
	1	Contact output OUT1 asserted.
	b	Both TRIP and OUT1 asserted.
Out 23	2	Contact output OUT2 asserted.
	3	Contact output OUT3 asserted.
	b	Both OUT2 and OUT3 asserted.
Out A	A	Contact output ALARM asserted.

Table 8.5 Output, Input, and Element Event Report Columns *(Sheet 3 of 3)*

Column Heading	Symbol	Definition
In 12	1	Contact input IN1 asserted.
	2	Contact input IN2 asserted.
	b	Both IN1 and IN2 asserted.
In 34	3	Contact input IN3 asserted.
	4	Contact input IN4 asserted.
	b	Both IN3 and IN4 asserted.
In 56	5	Contact input IN5 asserted.
	6	Contact input IN6 asserted.
	b	Both IN5 and IN6 asserted.
In 7	7	Contact input IN7 (from SEL-2600) asserted.

Filtered & Unfiltered Event Reports

The SEL-701-1 Monitor samples the basic power system measurands (ac current and ac voltage) 16 times per power system cycle. The monitor filters the measurands to remove transient signals. Four times per cycle the monitor operates on the filtered values and reports them in the event report.

To view the raw inputs to the monitor, use the unfiltered event report retrieved using the serial port command **EVENT n R**. Use the unfiltered event reports to observe:

- Power system harmonics on current and voltage channels.
- Decaying dc offset during fault conditions on IA, IB, or IC.

Raw event reports display one extra cycle of data at the beginning of the report.

Resetting the Event Report Buffer

The **HISTORY R** command clears the event summaries and corresponding event reports from nonvolatile memory. See *Section 5: ASCII Serial Port Operation* for more information on the **HISTORY** command.

Sequential Events Recorder (SER) Report

SER Triggering

The monitor stores an entry in the SER report for a change of state of any one of the elements listed in the SER trigger setting as outlined in *Section 3: Settings Calculation*.

The monitor adds a message to the SER to indicate power up or settings change conditions:

```
Monitor newly powered up or settings changed
```

Each entry in the SER includes SER row number, date, time, element name or defined alias, and element state.

SER Trigger Condition Aliases

You may rename any of the SER trigger conditions using the SEL-701-1 Monitor ALIAS settings. The monitor permits up to 20 aliases to be assigned to conditions that trigger SER row entries. For instance, the factory default logic settings define contact input IN5 for operation as an Emergency Restart input. Factory default alias setting 15 renames input IN5 for reporting in the SER:

```
ALIAS15 =IN5 EMERGNCY_RSTART PICKUP DROPOUT
```

When input IN5 is asserted, the SER report will show the date and time of EMERGNCY_RSTART PICKUP. When input IN5 is deasserted, the SER report will show the date and time of EMERGNCY_RSTART DROPOUT. With this and other alias assignments, the SER record is easier for the operator to review. See *Section 3: Settings Calculation* for additional details regarding the alias settings.

Retrieving SER Reports

The monitor saves the latest 512 rows of the SER report in nonvolatile memory. Row 1 is the most recently triggered row and Row 512 is the oldest. Use the serial port **SER** command to view the SER report by date or SER row number as outlined in the examples shown in *Table 8.6*.

Table 8.6 Retrieving SER Reports *(Sheet 1 of 2)*

Example SER Serial Port Commands	Format
SER	If you enter the SER command with no numbers following it, the relay displays all available rows, up to row number 512. The rows display with the oldest row at the beginning (top) of the report and the newest row (Row 1) at the end (bottom) of the report. Chronological progression through the report is down the page and in descending row number.

Table 8.6 Retrieving SER Reports *(Sheet 2 of 2)*

Example SER Serial Port Commands	Format
SER 17	If you enter the **SER** command with a single number following it, the relay displays that number of rows, if they exist. The rows display with the oldest row at the beginning (top) of the report and the newest row (Row 1) at the end (bottom) of the report. Chronological progression through the report is down the page and in descending row number.
SER 10 33	If you enter the **SER** command with two numbers following it, the relay displays all the rows between (and including) Rows 10 and 33, if they exist. The rows display with the oldest row (Row 33) at the beginning (top) of the report and the latest row (Row 10) at the end (bottom) of the report. Chronological progression through the report is down the page and in descending row number.
SER 47 22	If you enter the **SER** command with two numbers following it, the relay displays all the rows between (and including) Rows 47 and 22, if they exist. The rows display with the row (Row 22) at the beginning (top) of the report and the oldest row (Row 47) at the end (bottom) of the report. **Reverse** chronological progression through the report is down the page and in ascending row number.
SER 3/30/97	If you enter the **SER** command with one date following it, the relay displays all the rows on that date, if they exist. The rows display with the oldest row at the beginning (top) of the report and the latest row at the end (bottom) of the report, for the given date. Chronological progression through the report is down the page and in descending row number.
SER 2/17/97 3/23/97	If you enter the **SER** command with two dates following it, the relay displays all the rows between (and including) dates 2/17/97 and 3/23/97, if they exist. The rows display with the oldest row (date 2/17/97) at the beginning (top) of the report and the latest row (date 3/23/97) at the end (bottom) of the report. Chronological progression through the report is down the page and in descending row number.
SER 3/16/97 1/5/97	If you enter the **SER** command with two dates following it, the relay displays all the rows between (and including) dates 1/5/97 and 3/16/97, if they exist. The rows display with the latest row (date 3/16/97) at the beginning (top) of the report and the oldest row (date 1/5/97) at the end (bottom) of the report. **Reverse** chronological progression through the report is down the page and in ascending row number.

The date entries in the previous example SER commands depend on the Date Format setting DATE_F. If setting DATE_F is equal to MDY, you should enter the dates as in the above examples (Month/Day/Year). If setting DATE_F is equal to YMD, you should enter the dates Year/Month/Day. If the requested SER event report rows do not exist, the monitor responds “No SER Data.”

Resetting the SER Report Buffer

Reset the SER data with the serial port **SER R** command.

Example Event Report

The example event report in *Figure 8.1* corresponds to the example Sequential Events Recorder (SER) report in *Figure 8.2 on page 8.17*. The boxed numbers in *Figure 8.1* match the SER row numbers in *Figure 8.2*. Row explanations follow in *Figure 8.7*.

In *Figure 8.1*, the arrow (>) in the column following the IN or Vc column identifies the "trigger" row, the row that corresponds to the Date and Time values at the top of the event report.

The asterisk (*) in the column following the Vc column identifies the row where the event summary data was taken. If the "trigger" row (>) and the summary row (*) are the same, the * symbol takes precedence.

```
SEL-701-1              Date: 08/15/2001    Time: 19:39:47.907          Event Date & Time
MONITOR                                                                Monitor Firmware ID
FID=SEL-701-1-R300-V11xxx-Z100100-D20010815      CID=4A50              Monitor Firmware Checksu

                                                 M L    O/C RTD  Out In
                                                 o o
                                                 t a444 555 WBOA
      Currents (A Pri)                Voltages (V Pri) o d679 000 drtm T2A 1357
   IA     IB     IC     IG     IN     VA    VB    VC   r       GN gghb 13  246
[1]                                                                          11 10 9 8
   45.2 -180.6  145.2    9.8   -0.0    113  -265   151 R .A.. ... .... 1.. ....
  256.0  -63.8 -125.4   66.8   -0.0    237   -21  -218 R .A.. ... .... 1.. ....   One cycle of data
  -45.2  180.2 -144.8   -9.8    0.1   -113   265  -151 R .A.. ... .... 1.. ....
 -256.4   63.8  125.6  -67.0    0.0   -236    21   218 R .A.. ... .... 1.. ....
.
[2 cycles of event data removed]
.
[4]
   46.4 -180.6  144.4   10.2    0.1    114  -265   150 R .A.. ... .... 1.. ....
  255.6  -63.6 -124.6   67.4    0.0    236   -20  -219 R .A.. ... .... 1.. ....
  -46.8  180.8 -144.2  -10.2   -0.1   -114   265  -150 R .A.. ... .... 1.. ....
 -255.4   63.4  124.6  -67.4   -0.1   -236    20   219*R .T.. ... .... b.. ....
[5]                                                                          7 6
   46.8 -180.8  144.0   10.0    0.1    114  -265   150 R .T.. ... .... b.. ....
  255.8  -63.0 -124.8   68.0    0.1    236   -20  -219 R .T.. ... .... b.. ....
  -47.0  180.6 -144.0  -10.4   -0.1   -114   265  -150 R .T.. ... .... b.. ....
 -255.8   62.8  124.8  -68.2    0.0   -236    20   219 R .T.. ... .... b.. ....
.
[5 cycles of event data removed]
.
[10]
   48.2 -180.8  144.0   11.4    0.0    116  -265   149 R .T.. ... .... b.. ....
  255.4  -62.4 -125.0   68.0    0.0    236   -19  -220 R .T.. ... .... b.. ....   5 4 3
  -48.0  180.8 -144.0  -11.2    0.0   -116   265  -149 R .T.. ... .... b.. ....
 -192.4   29.2  111.8  -51.4    0.0   -236    19   220 R .... ... .... T.. ....
[11]
   49.0 -127.4   89.6   11.2    0.0    116  -265   148 R .... ... .... T.. ....
   64.8    2.0  -49.6   17.2    0.0    238   -19  -220 R .... ... .... T.. ....
  -25.4   36.8  -17.4   -6.0    0.0   -117   265  -148 R .... ... .... T.. ....
    0.0    0.0    0.0    0.0    0.0   -239    18   220 R .... ... .... T.. ....
[12]                                                                         2 1
    0.0    0.0    0.0    0.0   -0.0    118  -265   148 . .... ... .... T.. ....
   -0.2    0.0    0.0   -0.2    0.0    239   -18  -220 . .... ... .... T.. ....
.
[3.5 cycles of event data removed]
.
```

Continued on next page

Continued from previous page

```
Event: UNBALANCED CURRENT
Frequency (Hz):       60.00
% Thermal Capacity:   69.0
% Unbalance Current:  15.3

                      IA        IB        IC        IN        IG       3I2
Currents (A):        259.7     191.6     190.6       0.1      68.2      69.0

                  Windings   Bearing   Ambient    Other
Hottest RTD(F):     150        112        78        NA

                    VAB       VBC       VCA
Voltages (V):       458       460       457

                     kW        kVAR      kVA       PF
Power:              163.8      44.1     169.6     0.97 LAG
```

Event Summary data taken from last two samples of 4th cycle

```
Monitor Settings:
RID     =SEL-701-1
TID     =MONITOR
CTR     = 60        ITAP    = 5         CTRN    = 60        INTAP   = 5
PHROT   = ABC       FNOM    = 60        DATE_F  = MDY       DMTC    = 15
PTR     = 4         DELTA_Y = Y         SINGLEV = N
SETMETH = RATING    FLA     = 5.00      SF      = 1.15      LRA     = 30.00
LRTHOT  = 12.0      LRTCOLD = 14.4      TD      = 1.00      TCAPU   = 90
TCSTART = 85        TCLRNEN = Y         COOLTIME= 800

50P1P   = OFF       50P2P   = OFF       50G1P   = 2.50      50G1D   = 0.10
50G2P   = OFF       50N1P   = 2.500     50N1D   = 0.10      50N2P   = OFF
50QP    = OFF

MAXSTART= 3         TBSDLY  = 20

LJTPU   = 2.0       LJTDLY  = 1.00      LLAPU   = OFF
46UBA   = 10        46UBAD  = 2.50      46UBT   = 15        46UBTD  = 5.00
E47T    = Y
SPDSDLY = OFF

RTDOPT  = INT       TMPREF  = F         RTD1LOC = WDG       RTD2LOC = WDG
RTD3LOC = WDG       RTD4LOC = WDG       RTD5LOC = WDG       RTD6LOC = WDG
RTD7LOC = BRG       RTD8LOC = BRG       RTD9LOC = BRG       RTD10LOC= BRG
RTD11LOC= AMB       RTD1TY  = PT100     RTD2TY  = PT100     RTD3TY  = PT100
RTD4TY  = PT100     RTD5TY  = PT100     RTD6TY  = PT100     RTD7TY  = NI120
RTD8TY  = NI120     RTD9TY  = NI100     RTD10TY = NI100     RTD11TY = PT100
TRTMP1  = 280       ALTMP1  = 250       TRTMP2  = 280       ALTMP2  = 250
TRTMP3  = 280       ALTMP3  = 250       TRTMP4  = 280       ALTMP4  = 250
TRTMP5  = 280       ALTMP5  = 250       TRTMP6  = 280       ALTMP6  = 250
TRTMP7  = OFF       ALTMP7  = 199       TRTMP8  = OFF       ALTMP8  = 199
TRTMP9  = OFF       ALTMP9  = 199       TRTMP10 = OFF       ALTMP10 = 199
TRTMP11 = OFF       ALTMP11 = OFF       EWDGV   = Y         EBRGV   = N
RTDBEN  = N

27P1P   = OFF       27P2P   = OFF
59P1P   = 73        59P2P   = OFF       59GP    = OFF
NVARAP  = OFF       NVARTP  = OFF
37PAP   = OFF       37PTP   = OFF
55LDAP  = OFF       55LDTP  = OFF
81D1P   = 59.10     81D1D   = 0.03      81D2P   = OFF       81D3P   = OFF
AOSIG   = 4-20MA    AOPARM  = %LOAD_I
FP_TO   = 15        FPBRITE = 50        FP_KW   = N         FP_RTD  = N

DM1_1   =SEL-701-1            DM1_0   =
DM2_1   =MONITOR              DM2_0   =
DM3_1   =RTD FAILURE          DM3_0   =
DM4_1   =                     DM4_0   =
DM5_1   =                     DM5_0   =
DM6_1   =                     DM6_0   =
TRFS    = Y         OUT1FS  = N         OUT2FS  = N         OUT3FS  = N
TDURD   = 0.50      ABSDLY  = 0
FACTLOG = Y
```

Figure 8.1 Example Event Report.

Example Sequential Events Recorder (SER) Report

This example SER report (*Figure 8.2*) corresponds to the event report in *Figure 8.1*.

```
SEL-701-1                          Date: 08/15/2001    Time: 19:50:04.744
MONITOR

FID=SEL-701-1-R300-V11xxx-Z100100-D20010815 CID=4A50

#     DATE        TIME           ELEMENT            STATE

13    06/07/2001  14:34:32.786   MOTOR_STOPPED      ENDS
12    06/07/2001  14:34:32.786   MOTOR_STARTING     BEGINS
11    06/07/2001  14:34:42.795   MOTOR_RUNNING      BEGINS
10    06/07/2001  14:34:42.795   MOTOR_STARTING     ENDS
9     06/07/2001  14:39:45.398   UNBALNC_I_ALARM     PICKUP
8     06/07/2001  14:39:45.398   OUT1               Asserted
7     06/07/2001  14:39:47.907   UNBALNC_I_TRIP      PICKUP
6     06/07/2001  14:39:47.907   TRIP               Asserted
5     06/07/2001  14:39:48.007   UNBALNC_I_TRIP      DROPOUT
4     06/07/2001  14:39:48.007   UNBALNC_I_ALARM     DROPOUT
3     06/07/2001  14:39:48.007   OUT1               Deasserted
2     06/07/2001  14:39:48.028   MOTOR_STOPPED      BEGINS
1     06/07/2001  14:39:48.028   MOTOR_RUNNING      ENDS
```

Figure 8.2 Example Sequential Events Recorder (SER) Event Report.

The SER event report rows in *Figure 8.2* are explained in the *Table 8.7*, numbered in correspondence to the # column. The numbered comments in *Figure 8.1* also correspond to the # column numbers in *Figure 8.2*. The SER event report in *Figure 8.2* contains records of events that occurred before the beginning of the event report in *Figure 8.1*.

Table 8.7 Example Sequential Events Recorder (SER) Event Report Explanations

Item #	Explanation
13, 12, 11, 10, 9, 8	After a 10-second accelerating time, the motor relay indicates the motor is running (11). Later, the current unbalance alarm element (46UBA, aliased as UNBALNC_I_ALARM) times out, causing the relay to close output contact OUT1, programmed to indicate protection element alarms (9, 8).
7, 6	The current unbalance trip element (46UBT, aliased as UNBALNC_I_TRIP) times out, causing the relay to trip. Since now both ouput contact OUT1 and TRIP are asserted, the relay places a 'b' in the T1 output column of the event report.
5, 4, 3	Declining current due to the opening contactor allows the unbalance detecting overcurrent elements to drop out and the relay deasserts output contact OUT1.
2, 1	As the current continues to drop, the relay declares the motor stopped.

Section 9

Maintenance & Troubleshooting

Routine Maintenance Checks

Because the SEL-701-1 Monitor is equipped with extensive self-tests, the most effective maintenance task is to monitor the monitor ALARM contact. The ALARM output contact closes when the monitor is deenergized or when monitor self-tests fail. If you are monitoring the ALARM contact, you know immediately if the monitor is deenergized or detects a failure. In addition, we recommend review of monitor event reports following faults. This review frequently reveals problems with equipment external to the monitor such as voltage transformers and control wiring.

The SEL-701-1 Monitor does not require specific routine tests, but your operational standards may require some periodic monitor verification. If you need or wish to perform periodic monitor verification, we recommend the following checks.

Monitor Status Verification

Use the front-panel Status of Monitor or serial port **STATUS** command to verify that the monitor self-tests have not detected any out-of-tolerance conditions.

Meter Verification

Verify that the monitor is measuring current signals and, if included, voltage signals by comparing the monitor meter reading to the reading of a separate meter connected in series (for current circuits) or parallel (for voltage circuits) with the monitor input.

Contact Input Verification

With the monitor and motor off-line, short-circuit the individual monitor contact inputs using a wire jumper or the connected switch or contact. Using the front-panel View Relay Word\Row 9 function, check the contact input status in the monitor front-panel display. As you short-circuit each input, its label (IN1, IN2, IN3, etc.) should appear in the front-panel display.

Contact Output Verification

Use the front-panel Pulse Out Contact\Trip command to close the TRIP output contact. Repeat for the other output contacts. Make sure that each contact operates properly in its designated annunciation, control, or tripping circuit. See *Section 4: Front-Panel Operation* and *Section 5: ASCII Serial Port Operation* for more details regarding the **PULSE** command.

Periodic Data Capture

We recommend that you download information from the monitor using the schedule shown in *Table 9.1*.

Table 9.1 Data Capture

Information Type	Download Schedule
Event Summaries (**HIS**)	As needed, to analyze monitor trips.
Event Reports (**EVE**)	As needed, to analyze monitor trips.
Sequential Events Recorder (**SER**)	As needed, to analyze monitor operation.
Load Profile (**LDP**)	Every 30 days, clear the buffer when you download.
Motor Statistics (**MOT**)	Every 3-6 months or when you perform motor maintenance.
Motor Start Reports (**MSR**)	Following initial motor start, following any locked rotor trip, and for motor or system analysis.
Motor Start Trending (**MST**)	Every 3-6 months or when you perform motor maintenance.
Max/Min Meter (**MET M**)	Every 3-6 months or when you perform motor maintenance.
Monitor Status (**STA**)	When you perform motor maintenance.

Self-Testing

The monitor runs a variety of self-tests. As shown below, when the monitor detects certain types of self-test failures, it closes the ALARM output b-contact. Monitoring this contact is the single most important monitor maintenance activity that you can perform.

The monitor takes the following actions for out-of-tolerance conditions in *Table 9.2*.

Protection Disabled

The monitor:

- Disables all protection functions and stop/start logic.
- Deenergizes all output contacts.
- Extinguishes the Enabled front-panel LED.

ALARM Output

The ALARM output contact signals an alarm condition by going to its deenergized state.

- The ALARM output b-contact closes for an alarm condition; the ALARM output a-contact opens for an alarm condition or if the monitor is deenergized.
- The monitor generates a STATUS report at the serial port for failures.
- The monitor displays failure messages on the monitor display.

Use the serial port **STATUS** command or front-panel Status of Monitor function to view the monitor self-test status.

Table 9.2 Monitor Self-Tests *(Sheet 1 of 2)*

Self-Test	Description	Limits	Protection Disabled on Failure	ALARM Output on Failure	Front-Panel Message on Failure
DC Offset	Measures the dc offset at each of the input channels.	160 mV	Yes	Latched	OFFSET FAILURE
+5 V PS	Measures the +5 V power supply.	+4.65 V+5.65 V	Yes	Latched	+5V FAILURE
-5 V PS	Measures the -5 V power supply.	-4.65 V-5.40 V	Yes	Latched	-5V FAILURE
+15 V PS	Measures the +15 V power supply.	+14.00 V+16.00 V	Yes	Latched	+15V FAILURE

Table 9.2 Monitor Self-Tests *(Sheet 2 of 2)*

Self-Test	Description	Limits	Protection Disabled on Failure	ALARM Output on Failure	Front-Panel Message on Failure
+28 V PS	Measures the +28 V power supply.	+24.00 V	Yes	Latched	+28V FAILURE
TEMP	Measures the temperature at the A/D voltage reference.	-50ºC+100ºC	Yes	Latched	TEMPERATUR E FAILURE
RAM	Performs a read/write test on system RAM.		Yes	Latched	RAM FAILURE
ROM	Performs a checksum test on the monitor program memory.	Checksum	Yes	Latched	ROM FAILURE
CR_RAM	Performs a checksum test on the active copy of the monitor settings.	Checksum	Yes	Latched	CR_RAM FAILURE
EEPROM	Performs a checksum test on the nonvolatile copy of the monitor settings.	Checksum	Yes	Latched	EEPROM FAILURE
Microprocessor Crystal	Monitors the microprocessor crystal.		Yes	Latched	CLOCK STOPPED
Microprocessor	The microprocessor examines each program instruction, memory access, and interrupt.	Test fails on detection of an invalid instruction, memory access, or spurious interrupt.	Yes	Latched	VECTOR nn
Clock Battery	Measures the real-time clock battery voltage.	Battery Voltage <2.50 V	No	Pulsed	
Real-Time Clock	Verifies the real-time clock chip communication, time-keeping, and memory functions.		No	Pulsed	
Learned Cool Time	Verifies the monitor's ability to learn the motor cooling time.	Unable to write data to target address	No	Pulsed	
Learned Thermal Capacity to Start	Verifies the monitor's ability to learn the motor thermal capacity to start.	Unable to write data to target address	No	Pulsed	

Troubleshooting Procedure

Enabled Front-Panel LED Dark

Table 9.3 Enabled Front-Panel LED Dark

Possible Cause	Solution
Input power not present or fuse is blown.	Verify input power and fuse continuity.
Self-test failure.	Check to see if the ALARM b-contact is closed. Use the front-panel Status of Monitor function to view self-test results.

Cannot See Characters on Monitor Front-Panel Display Screen

Table 9.4 Cannot See Characters on Monitor Front-Panel Display Screen

Possible Cause	Solution
Monitor front-panel has timed-out.	Press the {**ESC**} pushbutton to activate display.
Monitor is deenergized.	Verify input power and fuse continuity.

Table 9.5 Monitor Does Not Accurately Measure Voltages or Currents

Possible Cause	Solution
Wiring error.	Verify input wiring.
Incorrect CTR, ITAP, CTRN, INTAP, or PTR setting.	Verify signal source ratios, connections, and associated settings.
Voltage neutral terminal (D09) not properly grounded.	Verify wiring and connections.

Monitor Does Not Respond to Commands From Device Connected to Serial Port

Table 9.6 Monitor Does Not Respond to Commands From Device Connected to Serial Port

Possible Cause	Solution
Communications device not connected to monitor.	Verify cable connections.
Monitor or communications device at incorrect baud rate or other communication parameter incompatibility, including cabling error.	Verify terminal setup and cable pinout.
Monitor serial port has received an XOFF, halting communications.	Type **<CTRL>Q** to send monitor on XON and restart communications.
Rear-panel serial port protocol set differently than expected.	If you select Modbus® protocol, the rear-panel EIA-232 serial port is disabled. Use the EIA-485 port to communicate with the monitor using Modbus, or use the front-panel EIA-232 port to communicate with the monitor using ASCII text. See *Section 3: Settings Calculation* for more information on serial port configuration.

Monitor Does Not Respond to Faults

Table 9.7 Monitor Does Not Respond to Faults

Possible Cause	Solution
Monitor improperly set.	Verify monitor settings.
Improper test source settings.	Verify test source settings.
CT or PT input wiring error.	Verify input wiring.
Failed monitor self-test.	Use the front-panel Status of Monitor function to view self-test results.

Power Supply Fuse Replacement

The monitor power supply is equipped with a fuse that you can replace without disassembling the monitor. The fuse holder is located on the monitor rear panel, immediately above the power supply input terminals, D01–D03. Using a flat-blade screwdriver, push the fuse holder in slightly, then turn counterclockwise. After replacing the fuse, insert the fuse holder into the hole and, with a flat-blade screwdriver, turn clockwise to lock it in place.

Replacement Fuse Specifications: T 2 A 250 V, high breaking capacity.

The following manufacturers' part numbers are suitable replacement fuses:

Manufacturer	P/N	Comment
Schurter, Inc.	0001.2507	Original Equipment
Wickman USA, Inc.	181.1200.0.02	
Bussman	5505 2A	
Littelfuse	215 002	

Contact SEL for replacement fuses if you have difficulty obtaining an equivalent replacement locally. Use only high breaking capacity replacement fuses.

Real-Time Clock Battery Replacement

A lithium battery powers the monitor clock (date and time) if the external power source is lost or removed. The battery is a 3 V lithium coin cell, Rayovac No. BR2335 or equivalent. At room temperature (25°C), the battery will operate nominally for 10 years at rated load. When the monitor is powered from an external source, the battery only experiences a low self-discharge rate. Thus, battery life can extend well beyond the nominal 10 years because the battery rarely has to discharge after the monitor is installed. The battery cannot be recharged.

If the monitor does not maintain the date and time after power loss, or if the monitor self-tests indicate an RTC Battery Warning, replace the battery following the steps listed below.

CAUTION: The monitor contains devices sensitive to Electrostatic Discharge (ESD). When working on the monitor with the front panel removed, work surfaces and personnel must be properly grounded or equipment damage may result.

Step 1. Deenergize the monitor.

Step 2. Remove two front-panel retaining screws with a Phillips screwdriver from the monitor front panel. Carefully remove the monitor front panel from the monitor chassis.

CAUTION: Removal of enclosure panels exposes circuitry which may cause electrical shock which can rersult in injury or death.

Step 3. The monitor main board and display are attached to the inside of the monitor front panel. The battery is located on the upper left-hand side of the monitor main board. Carefully remove the battery from beneath the clip. Properly dispose of the old battery; it is not rechargeable.

Step 4. Install the new battery with the positive (+) side of the battery facing up.

Step 5. Carefully replace the monitor front panel on the monitor chassis. Install and tighten the front-panel retaining screws with a Phillips screwdriver.

WARNING: Be sure to carefully align the front panel with the monitor chassis during reassembly. If the front panel is not well aligned with the chassis, you may bend connector pins, causing the monitor to fail.

Step 6. Reenergize the monitor. Set the monitor date and time using the front-panel Set Monitor\Date and Set Monitor\Time functions.

Firmware Upgrade Installation

SEL occasionally offers firmware upgrades to improve the performance of the monitor. Since the SEL-701-1 Monitor stores firmware in flash memory, changing physical components is not necessary. Upgrade the monitor firmware by downloading a file from a personal computer to the monitor via the front-panel serial port as outlined in the following sections.

Required Equipment

- Personal computer.
- Terminal emulation software that supports XMODEM/CRC protocol (e.g., ProComm® Plus, Relay Gold, Microsoft Windows® Terminal™, SmartCOM, and CROSSTALK®).
- Serial communications cable (SEL-C234A or equivalent, or a null-modem cable).
- Disk containing firmware upgrade file.

Upgrade Instructions

The instructions below assume you have a working knowledge of your personal computer terminal emulation software. In particular, you must be able to modify your serial communications parameters (baud rate, data bits, parity, etc.), select transfer protocol (XMODEM/CRC), and transfer files (e.g., send and receive binary files).

Step 1. If the monitor is in service, open its motor control circuits.

Step 2. Connect the personal computer to the front-panel serial port and enter Access Level 2.

Step 3. Issue the **L_D <ENTER>** command to the monitor (L underscore D <ENTER>).

Step 4. Type **Y <ENTER>** to the "Disable monitor to send or receive firmware(Y/N)?" prompt and **Y <ENTER>** to the "Are you sure (Y/N)?" prompt. The monitor will send the SELBOOT prompt !>.

Step 5. Type **BAU 38400 <ENTER>**. This will change the baud rate of the communications port to 38400. Change the baud rate of your PC to 38400 to match the monitor.

Step 6. Make a copy of the firmware currently in the monitor. This is recommended in case the new firmware download is unsuccessful. To make a backup of the firmware, you will need approximately 2.3 MB of free disk space. The procedure takes less than 10 minutes at 38400 baud.

Issue the **SEN <ENTER>** command to initiate the firmware transfer. Select the binary XMODEM transfer and filename in your communications software. Give the file a unique name to clearly

identify the firmware version (e.g., 701R100.S19). After the transfer, the monitor will respond "Download completed successfully!"

Step 7. Begin the transfer of new firmware to the monitor by issuing the **REC <ENTER>** command to instruct the monitor to receive new firmware.

Step 8. Type **Y** to erase the existing firmware or just **<ENTER>** to abort.

Step 9. The monitor then prompts you to press a key and begin the transfer. Press a key (e.g., **<ENTER>**).

Step 10. Start the file transfer by selecting the send file option in your communications software. Use the XMODEM protocol and send the file that contains the new firmware (e.g., 701R101.S19).

The file transfer takes less than 10 minutes at 38400 baud. After the transfer is complete, the monitor will reboot and return to Access Level 1. The following screen capture shows the entire process. If you require additional commands during the upload/download process, type **HELP** to view the available commands.

```
=>>L_D <ENTER>
Disable monitor to send or receive firmware(Y/N) ? Y <ENTER>
Are you sure (Y/N) ? Y <ENTER>
Monitor Disabled
!>BAU 38400 <ENTER>
!>SEN <ENTER>
Download completed successfully!
!>REC <ENTER>
Caution! - This command erases the monitor's firmware.
If you erase the firmware, new firmware must be loaded into the monitor
before it can be put back into service.
Are you sure you wish to erase the existing firmware? (Y/N)Y
Erasing
Erase successful
Press any key to begin transfer, then start transfer at the PC <ENTER>
Upload completed successfully. Attempting a restart
```

Step 11. The monitor illuminates the Enabled front-panel LED if the monitor settings were retained through the download. If the Enabled LED is illuminated, proceed to *Step 12*. If the Enabled LED is not illuminated or the front panel display says, "STATUS FAIL EEPROM FAILURE," reload the monitor settings using the procedure below.

a. Set your communications software settings to 2400 baud, 8 data bits, 1 stop bit.

b. Enter Access Level 2 by issuing the **2AC** command.

c. Issue the **R_S** command to restore the factory default settings in the monitor. The monitor will then reboot with the factory default settings.

d. If the message, "Calibration settings lost, please call the factory!" appears during the restart, please contact the factory. (See *Factory Assistance on page 9.12*.)

e. Enter Access Level 2.

f. Issue a **STA** command and verify that monitor status is OK.

g. Set the monitor clock and calendar using the **DATE** and **TIME** commands.

h. Set the Monitor, Port, and SER settings using the SEL-5010 software or the following commands: **SET**, **SET P F**, **SET P R**, **SET R**.

i. Set the monitor passwords via the **PAS** command.

Step 12. Set your communications software settings (baud rate, number of data bits, number of stop bits) to agree with the port settings of the SEL-701-1 Monitor.

Step 13. Execute the **STATUS** command to verify all monitor self-test results are okay.

Step 14. Apply current and voltage signals to the monitor. Issue the **METER** command; verify that current and voltage signals are correct. Issue the **TRIGGER** and **EVENT** commands. Verify that current and voltage signals are correct in the **EVENT** report.

Step 15. If an SEL-2020 or SEL-2030 Communications Processor is connected to the SEL-701-1 Monitor, re-auto-configure the SEL-20x0 port. This step will prevent a future auto-configuration failure of the SEL-20x0 when its power is cycled and the new SEL-701-1 Monitor firmware does not match the original configuration.

The monitor is now ready for your commissioning procedure.

Factory Assistance

The employee-owners of Schweitzer Engineering Laboratories, Inc. are dedicated to making electric power safer, more reliable, and more economical.

We appreciate your interest in SEL products, and we are committed to making sure you are satisfied. If you have any questions, please contact us at:

Schweitzer Engineering Laboratories, Inc.
2350 NE Hopkins Court
Pullman, WA USA 99163-5603
Tel: (509) 332-1890
Fax: (509) 332-7990
www.selinc.com

We provide prompt, courteous, and professional service.

We appreciate receiving any comments and suggestions about new products or product improvements that would help us make your job easier.

Appendix A

Firmware Versions

This manual covers SEL-701-1 Monitors that contain firmware bearing the most recent part numbers and revision numbers listed at the top of the following table (most recent firmware listed at top).

Firmware Part/Revision No.	Description of Firmware
FID: SEL-701-1-R300-Vx1xxx-Z100100-D20010815	Model SEL-701-1 Original Firmware Release

To find the firmware revision number in your monitor, view the status report using the serial port **STATUS** command or the front-panel Status of Monitor function. The status report displays the FID label with the Part/Revision number in bold, for example:

FID=SEL-701-1-**R300-Vx1xxx-Z100100-D20010815**

This page intentionally left blank

APPENDIX B

SELOGIC® Control Equations and Monitor Logic

Introduction

The SEL-701-1 Monitor is equipped with programmable logic so you can customize various monitor functions. Use the programmable logic components described in this appendix to modify the factory default logic settings discussed in *Section 3: Settings Calculation*. This appendix also describes SELOGIC® control equations and their various applications within the SEL-701-1 Monitor. Specific topics include:

- General Operation of the Monitor.
- Relay Word Bits.
- SELOGIC Control Equations.
- Front-Panel Display Configuration Settings.
- Nondedicated SELOGIC Control Equation Variables.
- Latching Variables.
- Stop/Trip Logic.
- Breaker Auxiliary Contact Input.
- Start and Emergency Restart Logic.
- ACCESS2 Input Logic.
- TARR Input Logic.
- Speed Switch Contact Input.
- Event Triggering.
- Output Contact Control.
- Remote Control Functions.

Table B.1 on page B.4 and *Table B.2 on page B.5* summarize all the Relay Word bits. Use the Relay Word bits to create SELOGIC control equation settings. Figures in this section summarize the operation of many protection elements.

Monitor Functional Overview

Understanding the monitor's internal processes makes it easier to understand the monitor's programmable logic capabilities. *Figure B.1* illustrates these processes.

Data Acquisition & Filtering

The SEL-701-1 Monitor passes ac current and (if included) voltage signals through low-pass filters to remove signals above the eighth harmonic. Then the monitor digitally samples the signals 16 times per power system cycle. The monitor automatically tracks system frequency over the range of 20 to 70 Hz to ensure that exactly 16 samples are taken every cycle.

Four times per power system cycle, the monitor processes the sampled data using a digital filter that further removes unwanted signals, leaving the desired fundamental frequency data for protection calculations. At this time, the monitor also checks the contact inputs to determine if any are asserted.

Element Processing

Having acquired and filtered the ac signals, the monitor performs the enabled protection algorithms to determine if protection elements are picked up or dropped out.

Relay Word

Each monitor element is represented internally as a logic point, called a Relay Word bit. Each Relay Word bit exists in one of two states: true or false, picked up or dropped out. The monitor uses these results to evaluate fixed logic and the programmable SELOGIC control equations defined in the monitor settings. For further details see *Relay Word Bits*.

SELOGIC Control Equations

After evaluating the fixed logic, the monitor evaluates the SELOGIC control equations, then controls the monitor output contacts. See *SELogic Control Equations on page B.12* for a full discussion.

Background Tasks

By design, there is always processing time left after the monitor controls its output contacts and before it begins digitally filtering acquired signals again. During this free time, the monitor performs background tasks such as:

- Self-testing.
- Monitoring RTD temperature.
- Storing start report, event report, and SER records.
- Responding to serial port and front-panel commands.

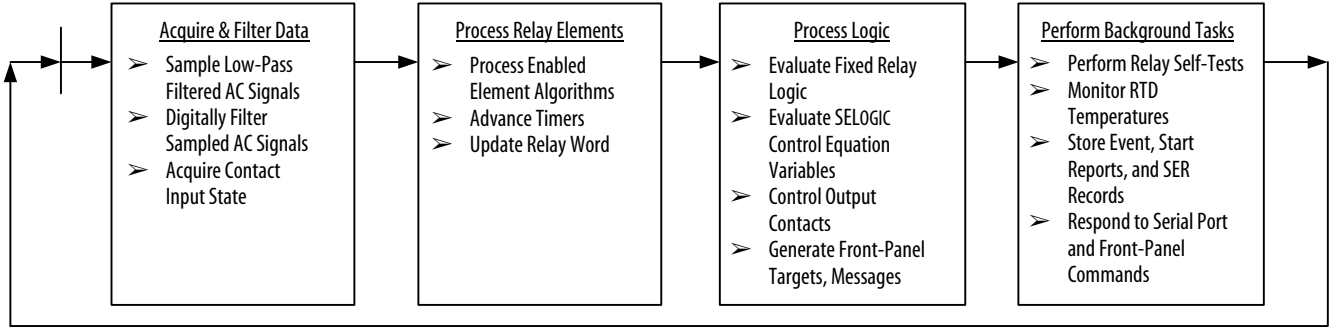

Figure B.1 Monitor Processing Order.

Relay Word Bits

The protection and control element results are represented by Relay Word bits. Each Relay Word bit has a label name and can be in either of the following states:

1 (logical 1) or 0 (logical 0)

Logical 1 represents an element being picked up or otherwise asserted. Logical 0 represents an element being dropped out or otherwise deasserted.

The Relay Word bits are collected into a table of 20 rows, each row containing 8 bits. The collection is called the Relay Word. *Table B.1* and *Table B.2* show a complete listing of Relay Word bits and their descriptions. The Relay Word bit row numbers correspond to the row numbers used in the **TAR** command (see *TARGET (Level 1 or 2) on page 5.27 in Section 5: ASCII Serial Port Operation*).

Table B.1 SEL-701-1 Relay Word Bits

Row	Relay Word Bits							
1	STARTING	RUNNING	STOPPED	JAMTRIP	LOSSALRM	LOSSTRIP	46UBA	46UBT
2	49A	49T	THERMLO	NOSLO	TBSLO	ABSLO	*	*
3	50P1T	50P2T	50N1T	50N2T	50QT	50S	50G1T	50G2T
4	47T	TRGTR	START	52A	SPDSTR	SPEEDSW	RTDBIAS	RTDFLT
5	WDGALRM	WDGTRIP	BRGALRM	BRGTRIP	AMBALRM	AMBTRIP	OTHALRM	OTHTRIP
6	27P1	27P2	59P1	59P2	59G	81D1T	81D2T	81D3T
7	37PA	37PT	55A	55T	VARA	VART	*	*
8	LT1	LT2	LT3	LT4	RB1	RB2	RB3	RB4
9	SV1	SV2	SV3	SV4	SV1T	SV2T	SV3T	SV4T
10	IN1	IN2	IN3	IN4	IN5	IN6	IN7	*
11	TRIP	OUT1	OUT2	OUT3	ALARM	*	*	*
12	*	LED1	LED2	LED3	LED4	LED5	LED6	LED7
13	RTD1A1	RTD2A1	RTD3A1	RTD4A1	RTD5A1	RTD6A1	RTD7A1	RTD8A1
14	RTD9A1	RTD10A1	RTD11A1	RTD12A1	*	*	*	*
15	RTD1A2	RTD2A2	RTD3A2	RTD4A2	RTD5A2	RTD6A2	RTD7A2	RTD8A2
16	RTD9A2	RTD10A2	RTD11A2	RTD12A2	*	*	*	*
17	RTD1A3	RTD2A3	RTD3A3	RTD4A3	RTD5A3	RTD6A3	RTD7A3	RTD8A3
18	RTD9A3	RTD10A3	RTD11A3	RTD12A3	*	*	*	*
19	RTD1T	RTD2T	RTD3T	RTD4T	RTD5T	RTD6T	RTD7T	RTD8T
20	RTD9T	RTD10T	RTD11T	RTD12T	*	*	*	*

Table B.2 Relay Word Bit Definitions for SEL-701-1 *(Sheet 1 of 7)*

Row	Bit	Definition
1	STARTING	Asserts when protected motor is starting (current is greater than 2.5 times motor rated full load current).
	RUNNING	Asserts when motor is running.
	STOPPED	Asserts when motor is stopped (current is less than 10% of motor rated full load current).
	JAMTRIP	Load-Jam Trip.
	LOSSALRM LOSSTRIP	Load-Loss Alarm and Load-Loss Trip. Assert when the monitor detects a load-loss as defined by that function and its settings. These Relay Word bits are inactive if the function is disabled by monitor settings.
	46UBA	Phase Current Unbalance Alarm (46UBA) and Trip (46UBT).
	46UBT	Assert when the monitor issues an alarm or trip in response to a current unbalance condition, as defined by that function and its settings.
2	49A 49T	Thermal Alarm (49A) and Trip (49T). Assert when the monitor issues a thermal element alarm or trip due to locked rotor starting or running overload conditions.
	THERMLO NOSLO TBSLO ABSLO	Motor Lockout Conditions. Asserted by the thermal element (THERMLO), starts per hour function (NOSLO), minimum time between starts (TBSLO), and the antibackspin timer (ABSLO).
	* *	Reserved for future use.
3	50P1T 50P2T	Level 1 and Level 2 Definite-Time Phase Overcurrent Elements.
	50N1T 50N2T	Level 1 and Level 2 Definite-Time Neutral Overcurrent Elements.
	50QT	Negative-Sequence Overcurrent Element.
	50S	Motor Starting Overcurrent Element(pickup = 2.5 • full load current).
	50G1T 50G2T	Level 1 and Level 2 Definite-Time Residual Overcurrent Elements.

Table B.2 Relay Word Bit Definitions for SEL-701-1 *(Sheet 2 of 7)*

Row	Bit	Definition
4	47T	Phase Reversal Trip. Asserts when the monitor detects a phase reversal condition, if phase reversal tripping is enabled by the monitor settings.
	TRGTR	Target Reset. Asserts for one quarter-cycle when you execute a front-panel or serial port target reset command, or when a rising edge of the TARR SELOGIC control equation is detected.
	START	Asserts when an internal monitor function calls for a motor start. A motor start only occurs if a monitor output contact is programmed with this Relay Word bit and connected to close the motor contactor or circuit breaker.
	52A	Asserts when the SELOGIC control equation 52A result is logical 1. Use to indicate that the motor contactor or circuit breaker is closed.
	SPDSTR	Speed Switch Trip. Asserts when the monitor does not detect a speed switch contact closure within a settable period from the beginning of a motor start, if the function is enabled by monitor settings.
	SPEEDSW	Speed Switch Input. Asserts when the SELOGIC control equation SPEEDSW result is logical 1. Used to indicate that the motor speed switch contact is closed.
	RTDBIAS	RTD Bias Alarm. When enabled, asserts when the motor winding temperature rise is greater than 60°C over ambient and the RTD % Thermal Capacity is more than ten percentage points higher than the motor thermal element % Thermal Capacity. Typically indicates a loss of motor cooling efficiency.
	RTDFLT	Asserts when an open or short circuit condition is detected on any enabled RTD input, or communication with the external RTD module has been interrupted.
5	WDGALRM WDGTRIP	Winding Temperature Alarm and Trip. WDGALRM asserts when any healthy winding RTD temperature exceeds its alarm setpoint. WDGTRIP asserts when one or two (when EWDGV = Y) healthy winding RTD temperatures exceed their trip setpoints.
	BRGALRM BRGTRIP	Bearing Temperature Alarm and Trip. BRGALRM asserts when any healthy bearing RTD temperature exceeds its alarm setpoint. BRGTRIP asserts when one or two (when EBRGV = Y) healthy bearing RTD temperatures exceed their trip setpoints.

Table B.2 Relay Word Bit Definitions for SEL-701-1 *(Sheet 3 of 7)*

Row	Bit	Definition
	AMBALRM AMBTRIP	Ambient Temperature Alarm and Trip. AMBALRM asserts if the healthy ambient RTD temperature exceeds its alarm setpoint. AMBTRIP asserts when the healthy ambient RTD temperature exceeds its trip setpoint.
	OTHALRM OTHTRIP	Other Temperature Alarm and Trip. OTHALRM asserts when any healthy other RTD temperature exceeds its alarm setpoint. OTHTRIP asserts when one or two (when EOTHV = Y) healthy bearing RTD temperatures exceed their trip setpoints.
6	27P1 27P2	Level 1 and Level 2 Phase Undervoltage Pickup.
	59P1 59P2	Level 1 and Level 2 Phase Overvoltage Pickup.
	59G	Residual Overvoltage Element Pickup.
	81D1T 81D2T 81D3T	Level 1, Level 2, and Level 3 Definite Time Over/Underfrequency Element Trip. Assert when the frequency has been either above or below the element setpoint for a definite time.
7	37PA 37PT	Underpower Alarm (37PA) and Trip (37PT). Assert when the monitor issues an underpower element alarm or trip.
	55A 55T	Power Factor Alarm (55A) and Trip (55T). Assert when the monitor issues a power factor element alarm or trip.
	VARA VART	Reactive Power Alarm (VARA) and Trip (VART). Assert when the monitor issues a reactive power element alarm or trip.
	* *	Reserved for future use.
8	LT1 LT2 LT3 LT4	SELOGIC control equation latch bit results.
	RB1 RB2 RB3 RB4	Remote bits 1 through 4.

Table B.2 Relay Word Bit Definitions for SEL-701-1 *(Sheet 4 of 7)*

Row	Bit	Definition
9	SV1	SELOGIC control equation variables 1 through 4.
	SV2	
	SV3	
	SV4	
	SV1T	SELOGIC control equation variable 1 through 4 with settable pickup and dropout time delay.
	SV2T	
	SV3T	
	SV4T	
10	IN1	Contact inputs IN1 through IN6.
	IN2	
	IN3	
	IN4	
	IN5	
	IN6	
	IN7	Contact input IN7. Available only when using SEL-2600 RTD Module.
	*	Reserved for future use.
11	TRIP	Contact outputs TRIP, OUT1, OUT2, OUT3, and ALARM.
	OUT1	
	OUT2	
	OUT3	
	ALARM	
	*	Reserved for future use
	*	
	*	

Table B.2 Relay Word Bit Definitions for SEL-701-1 *(Sheet 5 of 7)*

Row	Bit	Definition
12	*	Reserved for future use
	LED1	LED state when FACTLED is set to N
	LED2	
	LED3	
	LED4	
	LED5	
	LED6	
	LED7	
13	RTD1A1	RTDx Alarm # 1 (x = 1 to 12). Assert when the RTD temperature exceeds RTDx Alarm #1 setpoint. Deassert when the RTD temperature is below RTDx Alarm #1 setpoint.
	RTD2A1	
	RTD3A1	
	RTD4A1	
	RTD5A1	
	RTD6A1	
	RTD7A1	
	RTD8A1	
14	RTD9A1	RTDx Alarm # 1 (x = 1 to 12). Assert when the RTD temperature exceeds RTDx Alarm #1 setpoint. Deassert when the RTD temperature is below RTDx Alarm #1 setpoint.
	RTD10A1	
	RTD11A1	
	RTD12A1	
	*	Reserved for future use.
	*	
	*	
	*	

Table B.2 Relay Word Bit Definitions for SEL-701-1 *(Sheet 6 of 7)*

Row	Bit	Definition
15	RTD1A2 RTD2A2 RTD3A2 RTD4A2 RTD5A2 RTD6A2 RTD7A2 RTD8A2	RTDx Alarm # 2 (x = 1 to 12). Assert when the RTD temperature exceeds RTDx Alarm #2 setpoint. Deassert when the RTD temperature is below RTDx Alarm #2 setpoint.
16	RTD9A2 RTD10A2 RTD11A2 RTD12A2 * * * *	RTDx Alarm # 2 (x = 1 to 12). Assert when the RTD temperature exceeds RTDx Alarm #2 setpoint. Deassert when the RTD temperature is below RTDx Alarm #2 setpoint. Reserved for future use.
17	RTD1A3 RTD2A3 RTD3A3 RTD4A3 RTD5A3 RTD6A3 RTD7A3 RTD8A3	RTDx Alarm # 3 (x = 1 to 12). Assert when the RTD temperature exceeds RTDx Alarm #3 setpoint. Deassert when the RTD temperature is below RTDx Alarm #3 setpoint.

Table B.2 Relay Word Bit Definitions for SEL-701-1 *(Sheet 7 of 7)*

Row	Bit	Definition
18	RTD9A3 RTD10A3 RTD11A3 RTD12A3 * * * *	RTDx Alarm # 3 (x = 1 to 12). Assert when the RTD temperature exceeds RTDx Alarm #3 setpoint. Deassert when the RTD temperature is below RTDx Alarm #3 setpoint. Reserved for future use.
19	RTD1T RTD2T RTD3T RTD4T RTD5T RTD6T RTD7T RTD8T	RTDx Alarm # 1 (x = 1 to 12). Assert when the RTD temperature exceeds RTDx Alarm #1 setpoint. Deassert when the RTD temperature is below RTDx Alarm #1 setpoint.
20	RTD9T RTD10T RTD11T RTD12T * * * *	RTDx Trip (x = 1 to 12). Assert when the RTD temperature exceeds RTDx Trip setpoint. Deassert when the RTD temperature is below RTDx Trip setpoint. Reserved for future use.

SELOGIC Control Equations

SELOGIC control equations combine monitor protection and control elements with logic operators to create custom protection and control schemes. This section shows how to set the protection and control elements (Relay Word bits) in the SELOGIC control equations.

SELOGIC control equations are set with combinations of Relay Word bits to accomplish such functions as:

- Tripping circuit breakers.
- Assigning contact inputs to functions.
- Operating contact outputs.

You can use SELOGIC control equations to create traditional or advanced custom schemes.

SELOGIC Control Equation Operators

Build SELOGIC control equation settings using logic similar to Boolean algebra logic, by combining Relay Word bits together using one or more of the six SELOGIC control equation operators listed in *Table B.3*. These operators are processed in a SELOGIC control equation in the order shown in *Table B.3*.

Table B.3 SELOGIC Control Equation Operators
(listed in processing order)

Operator	Logic Function
/	Rising edge detect
\	Falling edge detect
( )	parentheses
!	NOT
*	AND
+	OR

SELOGIC Control Equation AND Operator [*]

Use the asterisk [*] symbol to denote logical AND operations. When you use the [*] between two Relay Word bits, both must pick up in order for the monitor to perform the operation in question. For instance, if SV1 is the equation that controls SELOGIC control equation variable 1, you could set SV1 equal to:

$$SV1 = 50P1T * IN4 \qquad \textbf{Equation B.1}$$

With this setting, SV1 is true, or logical 1, when both 50P1T and IN4 are true. Any number of Relay Word bits may be ANDed together within an equation, subject to the overall limitations described in *SELogic Control Equation Limitations on page B.15*.

SELOGIC Control Equation OR Operator [+]

Use the plus [+] symbol to denote logical OR operations. When you use the [+] between two Relay Word bits, either can pick up to cause the monitor to perform the operation in question. For instance, if SV1 is the equation controlling SELOGIC control equation variable 1, you could set SV1 equal to:

$$SV1 = 50P1T + 50P2T \qquad \textbf{Equation B.2}$$

With this setting, SV1 is true, or logical 1, when either 50P1T or 50P2T are picked up. Any number of Relay Word bits may be ORed together within an equation, subject to the overall limitations described in *SELogic Control Equation Limitations on page B.15*.

SELOGIC Control Equation Falling-Edge Operator [\]

Use the falling-edge operator [\] with individual Relay Word bits to cause a single processing-cycle assertion when the Relay Word bit changes state from logical 1 to logical 0. The falling-edge operator [\] looks for Relay Word bit deassertion (element going from logical 1 to logical 0). The falling-edge operator [\] in front of a Relay Word bit sees this logical 1 to logical 0 transition as a falling-edge and asserts to logical 1 for one processing interval. Do not apply the [\] operator to groups of elements within parentheses.

For example, suppose the SELOGIC control equation event report generation setting is set with the detection of the falling-edge of an underfrequency element:

$$ER = \ldots + \backslash 81D1T \qquad \textbf{Equation B.3}$$

When frequency goes above the corresponding pickup level 81D1P, Relay Word bit 81D1T deasserts and an event report is generated (if the monitor is not already generating a report that encompasses the new transition). This allows a recovery from an underfrequency condition to be observed. *Figure B.2* demonstrates the action of the falling-edge operator [\] on the underfrequency element in setting ER.

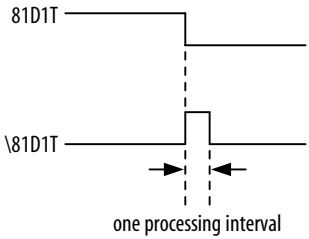

Figure B.2 Result of Falling-Edge Operator on a Deasserting Underfrequency Element.

SELOGIC Control Equation Rising-Edge Operator [/]

Use the rising-edge operator [/] with individual Relay Word bits to cause a single processing-cycle assertion when the Relay Word bit changes state from logical 0 to logical 1. Do not apply the [/] operator to groups of elements within parentheses.

SELOGIC Control Equation Parentheses Operator [( )]

Use parentheses to logically combine multiple elements. More than one set of parentheses [( )] can be used in a SELOGIC control equation setting. Parentheses cannot be "nested" (parentheses within parentheses) in a SELOGIC control equation setting. For example, the following SELOGIC control equation setting has two sets of parentheses:

$$SV4 = (SV4 + IN2 + TRIP) \bullet (50P1T + 50N1T) \qquad \textbf{Equation B.4}$$

In the above example, the logic within the two sets of parentheses is processed first and then the two results are ANDed together. The example equation could be used to provide simple motor breaker failure protection.

SELOGIC Control Equation NOT Operator [!]

Use the NOT operator [!] to invert a single Relay Word bit and also to invert the result of multiple elements combined within parentheses.

Set SELOGIC Control Equations Directly to Logical 1 or Logical 0

To define a condition always picked up or always dropped out, you can set SELOGIC control equations directly to:

1 (logical 1) or 0 (logical 0)

If you set a SELOGIC control equation setting directly to 1, it is always asserted/on/enabled. If you set a SELOGIC control equation setting equal to 0, it is always deasserted/off/disabled.

All SELOGIC Control Equations Must Be Set

If you use SELOGIC control equations, every one needs to be set by making it equal to one of the following:

- A single Relay Word bit.
- A logical combination of Relay Word bits.
- Directly to logical 1.
- Directly to logical 0.

If you are satisfied with the factory default logic setting, you may leave the SELOGIC control equation setting unedited.

SELOGIC Control Equation Limitations

Each single SELOGIC control equation setting is limited to 25 Relay Word bits that you can combine together with the SELOGIC control equation operators listed in *Table B.3 on page B.12*. If you need to exceed this limit, use a nondedicated SELOGIC control equation variable (SELOGIC control equation settings SV1 through SV4) to combine terms and shorten the final equation.

The sum of SELOGIC control equation settings is limited to approximately 80 Relay Word bits that can be combined together using the operators listed in *Table B.3*. SELOGIC control equation settings that are set directly to 1 (logical 1) or 0 (logical 0) must be included in this sum of 80 Relay Word bits with each such setting counted as one Relay Word bit.

As the monitor saves its settings, it calculates the percentage of SELOGIC control equation capability used. The monitor reports this percentage as LEUSE = xx.x when the settings are saved and when you execute the **SHOW** command. The LEUSE value provides a measure of the monitor SELOGIC control equation capability. The remainder (100% – LEUSE) is available for future expansion.

Factory Default Logic Settings

When you use the factory default logic by setting FACTLOG equal to Y, the monitor hides the logic settings and default settings shown below. Operation of these default settings is described in *Section 3: Settings Calculation*.

If you set FACTLOG equal to N, the monitor displays each of the settings in the screen capture below. You can modify one or more of these settings to customize the monitor function. Descriptions of the functions controlled by the default settings are included in the remainder of this appendix.

NOTE: If you change SELOGIC control equation settings, then return the FACTLOG setting to Y, the monitor will clear your changes and resume using the factory settings shown below.

```
DISPLAY MESSAGE VARIABLES

DM1   =1

DM2   =1

DM3   =RTDFLT

DM4   =0

DM5   =0

DM6   =0

LOGIC VARIABLES

Logic Variable 1
SV1   =0
SV1 Pickup Time (0.00 - 3000.00 s)              SV1PU=0.00
SV1 Dropout Time (0.00 - 3000.00 s)             SV1DO=0.00

Logic Variable 2
SV2   =0
SV2 Pickup Time (0.00 - 3000.00 s)              SV2PU=0.00
SV2 Dropout Time (0.00 - 3000.00 s)             SV2DO=0.00

Logic Variable 3
SV3   =0
SV3 Pickup Time (0.00 - 3000.00 s)              SV3PU=0.00
SV3 Dropout Time (0.00 - 3000.00 s)             SV3DO=0.00

Logic Variable 4
SV4   =0
SV4 Pickup Time (0.00 - 3000.00 s)              SV4PU=0.00
SV4 Dropout Time (0.00 - 3000.00 s)             SV4DO=0.00

SET/RESET LATCH VARIABLES

Latch Variable 1
SET1  =0
RST1  =1

Latch Variable 2
SET2  =0
RST2  =1

Latch Variable 3
SET3  =0
RST3  =1

Latch Variable 4
SET4  =0
RST4  =1
```

Continued on next page

Continued from previous page

```
OUTPUT LOGIC
TRIP  =JAMTRIP + 46UBT + 49T + 50P1T + 50P2T + 50N1T
     + 50N2T + 50G1T + 50G2T + 50QT + 47T + SPDSTR + WDGTRIP
     + BRGTRIP + AMBTRIP + OTHTRIP + 81D1T + 81D2T + 81D3T
     + !27P1 * (LOSSTRIP + 37PT + 55T + VART) + IN2

ULTRIP =0

52A   =!IN1

STR   =0

EMRSTR =IN5 * STOPPED

SPEEDSW =IN3 + IN7

ACCESS2 =IN4

TARR =20

0
ER   =/LOSSALRM + /46UBA + /49A + \81D1T + \81D2T + \81D3T + /37PA
     + /55A + /VARA

OUT1  =LOSSALRM + 46UBA + 49A + 37PA + 55A + VARA

OUT2  =RTDBIAS + WDGALRM + BRGALRM + AMBALRM + OTHALRM + RTDFLT

OUT3  =START
```

Factory Default LED Settings

When you use the factory default LED logic by setting FACTLED equal to Y, the monitor hides the settings for the LEDs shown in *Table B.4*, and reverts back to the definitions of the LEDs given in *Table B.4*.

Table B.4 SEL-701-1 Monitor Programmable Front-Panel LEDs

LED Label	Definition	Setting
Thermal Overload	This LED flashes when the thermal element reaches the alarm level, if any monitored, healthy RTD exceeds its alarm temperature. This LED remains on steadily after a thermal element trip, load jam trip, speed switch trip, or RTD temperature trip.	LED1
Overcurrent	This LED remains on steadily after a trip due to a short circuit fault detected by a phase, negative-sequence, residual, or neutral overcurrent element.	LED2
Unbalance	This LED flashes when the current unbalance alarm elelment picks up. This LED remains on steadily after a trip while the current unbalance element is picked up or after a phase reversal trip.	LED3
Load Loss	This LED flashes when a load loss alarm occurs or if the underpower alarm element picks up. This LED remains on steadily after a load loss trip or a trip while the underpower element is picked up.	LED4
Voltage	This LED flashes when a power factor or reactive power alarm occurs. This LED remains on steadily after a power factor or reactive power trip or a trip that occurs while an undervoltage or overvoltage element is picked up.	LED5
Frequency	This LED remains on steadily after a trip that occurs while an over- or underfrequency element is picked up.	LED6
Motor Energized	This LED remains off while the motor is stopped, flashes while the motor is starting, and remains on while the motor is running.	LED7

If you set FACTLED equal to N, the monitor displays each of the settings in the screen capture below. You can modify one or more of these settings to customize the LED function.

NOTE: Setting FACTLOG to Y will result in the monitor clearing your changes and using the factory definitions in *Table B.4 on page B.18*.

```
Monitor Settings:
LED Logic
LED1 =0
LED2 =0
LED3 =0
LED4 =0
LED5 =0
LED6 =0
LED7 =0
```

Front-Panel Display Message Configuration

There are four text display messages available in the SEL-701-1 Monitor. Each text display has two complementary screens.

SELOGIC control equation display message setting DMn (n = 1–6) controls the display of corresponding, complementary text settings. For example,

Message DM2_1 is displayed when the SELOGIC control equation DM2 = logical 1

Message DM2_0 is displayed when the SELOGIC control equation DM2 = logical 0

Make each text setting through the front panel or serial port using the **SET** command. View text settings using the serial port command **SHOW**. These text settings are displayed on the monitor front-panel display on a two-second rotation.

The factory default settings display two monitor-identifying messages continuously and a warning message in the event of an RTD failure.

Nondedicated SELOGIC Control Equation Variable Settings

The SEL-701-1 Monitor is equipped with four nondedicated SELOGIC control equation variables. Each variable has a defining SELOGIC control equation, a time-delay pickup timer, and a time-delay dropout timer.

The SV1 SELOGIC control equation is the logical definition of the SV1 Relay Word bit. Make the SELOGIC control equation setting by combining Relay Word bits and logical operators.

The SV1PU setting defines the SV1T Relay Word bit time-delay pickup time. SV1T asserts SV1PU seconds after the SV1 SELOGIC control equation result becomes a logical 1. The SV1DO setting defines the SV1T Relay Word bit time-delay dropout time. Once SV1T is asserted, it remains asserted for SV1DO seconds after the SV1 SELOGIC control equation result becomes a logical 0. *Figure B.3* illustrates the SELOGIC control equation variable timer logic. For an example control equation see *Equation on page B.14*.

Settings SV2 through SV4 operate similarly.

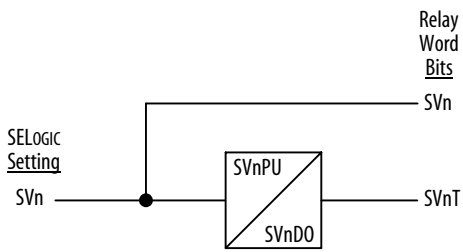

Figure B.3 SELOGIC Control Equation Variable Timer Logic.

Latch Control Switch Settings

The latch control switch feature of the SEL-701-1 Monitor replaces latching monitors. The state of a traditional latching monitor output contact is changed by pulsing the latching monitor inputs. (See *Figure B.4*). Pulse the set input to close (set) the latching monitor output contact. Pulse the reset input to open (reset) the latching monitor output contact.

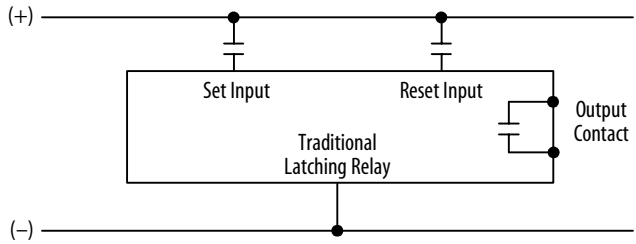

Figure B.4 Traditional Latching Relay.

Four latch control switches in the SEL-701-1 Monitor provide latching relay type functions.

The output of the latch control switch in *Figure B.5* is a Relay Word bit LTn (n = 1–4), called a latch bit. The latch control switch logic in *Figure B.5* repeats for each latch bit LT1 through LT4. Use these latch bits in SELOGIC control equations.

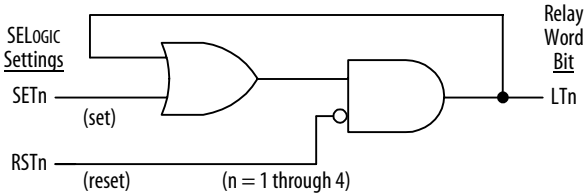

Figure B.5 Latch Control Switches Drive Latch Bits LT1 through LT4.

These latch control switches each have the following SELOGIC control equation settings:

- SETn sets latch bit LTn to logical 1 when SETn SELOGIC control equation result is logical 1.
- RSTn reset latch bit LTn to logical 0 when RSTn SELOGIC control equation result is logical 1.

If both SETn and RSTn assert to logical 1, RSTn has priority and latch bit LTn deasserts to logical 0.

Latch Control Switch States Are Retained During Power Loss

The states of the latch bits are retained if power to the monitor is lost and then restored. This capability makes the latch bit feature behave the same as traditional latching relays.

Make Latch Control Switch Settings With Care

The latch bit states are stored in nonvolatile memory so they can be retained during power loss. The nonvolatile memory is rated for a finite number of writes for all cumulative latch bit state changes. Exceeding the limit can result in an EEPROM self-test failure. An average of 150 cumulative latch bit state changes per day can be made for a 25-year monitor service life.

The SELOGIC control equation settings SETn and RSTn for any given latch bit LTn (n = 1–4; see *Figure B.5 on page B.22*) must be set with care. Settings SETn and RSTn must not result in continuous cyclical operation of latch bit LTn. Use timers to qualify conditions set in settings SETn and RSTn.

Stop/Trip Logic

The SEL-701-1 Monitor tripping logic is designed to trip or stop motors energized through circuit breakers or contactors. The monitor logic lets you define the conditions that cause a trip, the conditions that unlatch the trip, and the performance of the monitor output contact motor contactor or breaker. *Figure B.6 on page B.25* illustrates the tripping logic.

Initiate Trip

The SEL-701-1 Monitor Trip Logic offers three ways to stop the protected motor:

- TRIP SELOGIC control equation.
- Front panel, Modbus®, or serial port **STOP** command.
- Trips generated by the remote bit function.

Any of the three of these conditions will trigger an event report. The monitor controls the TRIP output contacts depending on the Enable Trip Contact Fail-Safe setting. Refer to *Figure B.6*.

Set the TRIP SELOGIC control equation to include an OR-combination of all the enabled protection element Relay Word bits that you want to cause the monitor to trip. Use the factory default setting as a guideline.

Unlatch Trip

Following a fault, the trip signal is maintained until all of the following conditions are true:

- Minimum Trip Duration Time (TDURD) passes.
- The TRIP SELOGIC control equation result deasserts to logical 0.
- All the motor lockout functions described below deassert to logical 0.
- One of the following occurs:
  - Unlatch Trip SELOGIC control equation setting ULTRIP asserts to logical 1.
  - A rising edge of the TARR SELOGIC control equation is detected.
  - The front-panel Trip/Target Reset menu item is selected.
  - The serial port **TARGET R** (Target Reset) command is executed.
  - The Modbus Reset control command is executed.
  - An Emergency Restart command is executed or the EMRSTR SELOGIC control equation setting asserts to logical 1.

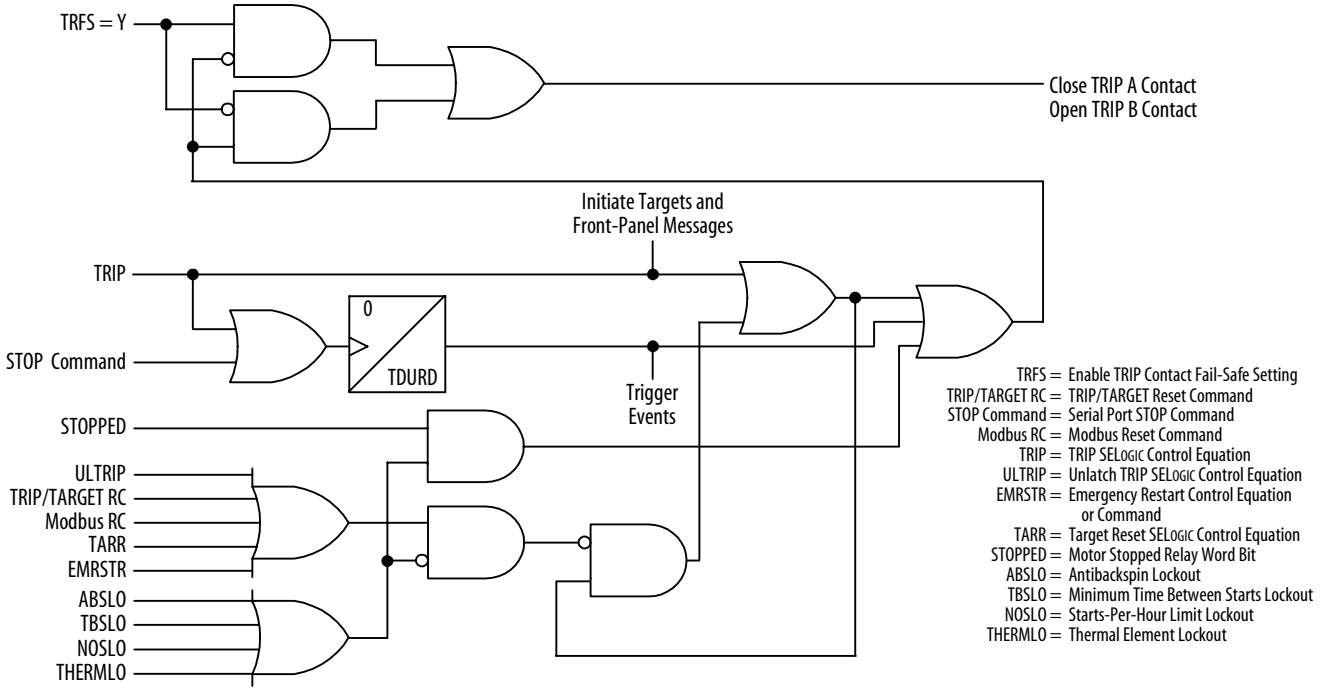

Figure B.6 Stop/Trip Logic.

The monitor automatically locks out the motor by asserting the trip signal under any of the following conditions:

- **Antibackspin Lockout.** The antibackspin timer has not expired since the motor trip occurred. The trip signal is maintained until the antibackspin timer expires.
- **Minimum Time Between Starts Lockout.** A new start is not permitted until after the minimum time between starts has passed. The trip signal is maintained until a start is permitted.
- **Starts-Per-Hour Limit Lockout.** If the starts-per-hour limit has been met, a new start is not permitted until 60 minutes after the oldest start. The trip signal is maintained until a start is permitted.
- **Thermal Element Lockout.** The motor thermal element % Thermal Capacity value is too high to permit a normal motor start without tripping. The trip signal is maintained until the % Thermal Capacity decreases to a level where a start can safely take place.

If any of the above protection functions is not enabled by the monitor settings, that function does not affect trip unlatch.

Also note that the monitor automatically asserts the trip signal if the motor stops and a lockout condition is true. The trip signal is maintained until all the enabled motor lockout conditions are satisfied.

Trips initiated by the **STOP** command, the front-panel Stop Motor function, or by Modbus operation are maintained for at least the duration of the Minimum Trip Duration Time (TDURD) setting.

EXAMPLE B.1 Breaker Auxiliary Contact SELOGIC Control Equation Setting

The breaker auxiliary contact SELOGIC control equation setting, 52A =, defines the monitor input contact that is connected to a breaker auxiliary contact. The factory default setting, 52A = !IN1, allows you to connect a breaker 52B contact to input IN1. If you wish to connect a breaker 52A contact to the input, set 52A = IN1. The equation result is the 52A Relay Word bit. You can use the result to create custom control functions such as breaker failure logic, if necessary, for your application.

Start and Emergency Restart Logic

Figure B.7 shows the logic the monitor uses to initiate motor starts.

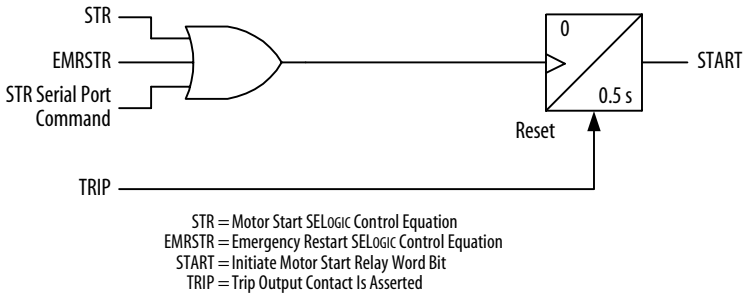

Figure B.7 Start Logic.

If the Trip output contact is not asserted, the monitor asserts the START Relay Word bit in response to any of these conditions:

- The Motor Start SELOGIC control equation (STR) result is true (logical 1).
- The Emergency Restart Relay Word bit asserts.
- You execute the **STR** serial port command or a Modbus Start control command.

The START Relay Word bit remains asserted for 0.5 seconds, unless the monitor trips. If the monitor trips before the 0.5 second timer expires, the monitor resets the timer, clearing the START Relay Word bit.

The Motor Start SELOGIC control equation allows you to define a logical condition that initiates a motor start.

EXAMPLE B.2 Initiating a Motor Start Using a Monitor Contact Input

You can use a monitor contact input such as IN6 to initiate motor starting. Set the SELOGIC control equation STR = IN6. Connect the normally open pushbutton contact to monitor terminals C08 and C09 (IN6). Program an output contact to close when the START Relay Word bit asserts, as shown in *Program an Output Contact for Motor Starting on page B.28*. When you push the button, IN6 is asserted, asserting the START bit, closing the output contact, and initiating the start.

In an emergency, it may be necessary to quickly start the motor even though a protection lockout condition exists and is holding the TRIP output contact asserted. The lockout might be a result of the thermal element or another protection function (see *Stop/Trip Logic on page B.24*). You can override all the lockout conditions using the Emergency Restart function.

The monitor asserts the Emergency Restart Relay Word bit (EMRSTR) in response to any of these conditions:

- The EMRSTR Control Equation result is true (logical 1).
- You execute the front-panel menu Emergency Restart command.
- The monitor receives a Modbus Emergency Restart control command.

When the Emergency Restart Relay Word bit asserts, the monitor:

- Resets the motor thermal element capacity used to 0%.
- Manipulates the Starts-Per-Hour, Minimum Time Between Starts, and Antibackspin functions to permit an immediate start.
- Deasserts the TRIP output contact if no fault detecting element is picked up.
- Initiates a motor start through the logic shown in *Figure B.7 on page B.27*.

NOTE: For the EMRSTR SELOGIC control equation performance to match the performance of the front-panel and Modbus Emergency Restart functions, you should include * STOPPED in the SELOGIC control equation, as shown in *Factory Default Logic Settings on page B.16*. Do not set EMRSTR =1.

Program an Output Contact for Motor Starting

In the factory settings, the result of the start logic in *Figure B.7* is routed to output contact OUT3 with the following SELOGIC control equation:

$$\text{OUT3} = \text{START} \qquad \textbf{Equation B.5}$$

ACCESS2 SELOGIC Control Equation Setting

The ACCESS2 SELOGIC control equation settings define conditions when Level 2 command access is permitted without Level 2 password entry. The factory default setting allows Access Level 2 serial port and front-panel command execution when input IN4 is asserted. You may want to connect a keyswitch contact to the input so monitor settings can be modified by persons having the correct key.

TARR SELOGIC Control Equation Setting

The TARR SELOGIC control equation setting defines conditions for the reset of front-panel targets. The factory default setting is disabled. You should assign a contact input to allow remote target reset.

Speed Switch SELOGIC Control Equation Setting

The speed switch SELOGIC control equation, SPEEDSW, defines the monitor input contact that is connected to the motor speed switch. The factory default setting allows you to connect the speed switch contact to input IN3 at the monitor or input IN7 at the SEL-2600 RTD Module, if installed. The Speed Switch Trip logic, described in *Section 3: Settings Calculation*, uses the result of the SPEEDSW SELOGIC control equation.

Event Triggering SELOGIC Control Equation

The event report trigger SELOGIC control equation, ER, triggers standard event reports for conditions other than trip conditions. When setting ER sees a logical 0 to logical 1 transition, it generates an event report (if the monitor is not already generating a report that encompasses the new transition). The factory setting shown in *Table B.3 on page B.12* includes a rising-edge operator [/] in front of each of the alarm elements. This is used to trigger an event report at alarm inception. Falling-edge operators are used to generate an event report at frequency element dropout, when the system frequency has stabilized at or near the nominal frequency.

Contact Output Control

SELOGIC control equation settings and their respective fail-safe settings directly control the contact outputs OUT1, OUT2, and OUT3. The SELOGIC control equation settings let you program individual contact outputs using single Relay Word bits for element testing purposes or to create more complex functions by combining Relay Word bits and SELOGIC control equation operators.

Remote Control Switches

Remote control switches do not have settings; they are operated via the serial communications port only (see *CONTROL (Level 2) on page 5.12 in Section 5: ASCII Serial Port Operation*).

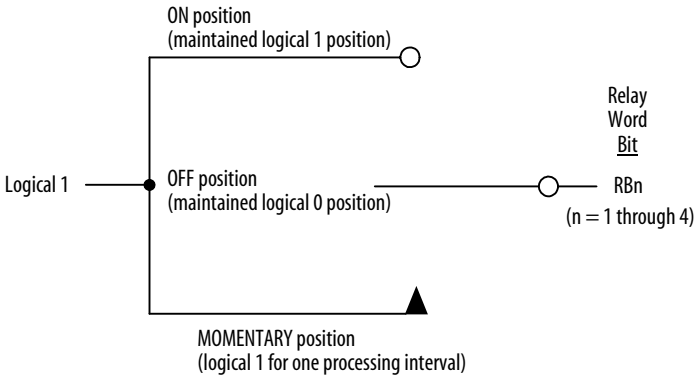

The switch representation in this figure is derived from the standard:
Graphics Symbols for Electrical and Electronics Diagrams
IEEE Std 315-1975, CSA Z99-1975, ANSI Y32.2-1975,
4.11 Combination Locking and Nonlocking Switch, Item 4.11.1

Figure B.8 Remote Control Switches Drive Remote Bits RB1 through RB4.

The outputs of the remote control switches in *Figure B.8* are Relay Word bits RBn (n = 1–4), called remote bits. Use these remote bits in SELOGIC control equations.

Any given remote control switch can be put in one of three positions shown in *Table B.5*.

Table B.5 Remote Control Switch

Control Switch Position	Description
ON	logical 1
OFF	logical 0
MOMENTARY	logical 1 for one processing interval

Remote Bit Application Ideas

With SELOGIC control equations, you can use the remote bits to trip or start the motor or to open, close, or pulse monitor output contacts for other purposes.

Also, you can use remote bits like a contact input in operating latch control switches. Pulse (momentarily operate) the remote bits for this application.

Remote Bit States Are Not Retained When Power Is Lost

The states of the remote bits (Relay Word bits RB1–RB4) are not retained if power to the monitor is lost and then restored. The remote control switches always come back in the OFF position (corresponding remote bit is deasserted to logical 0) when power is restored to the monitor.

Selected Monitor Logic Diagrams

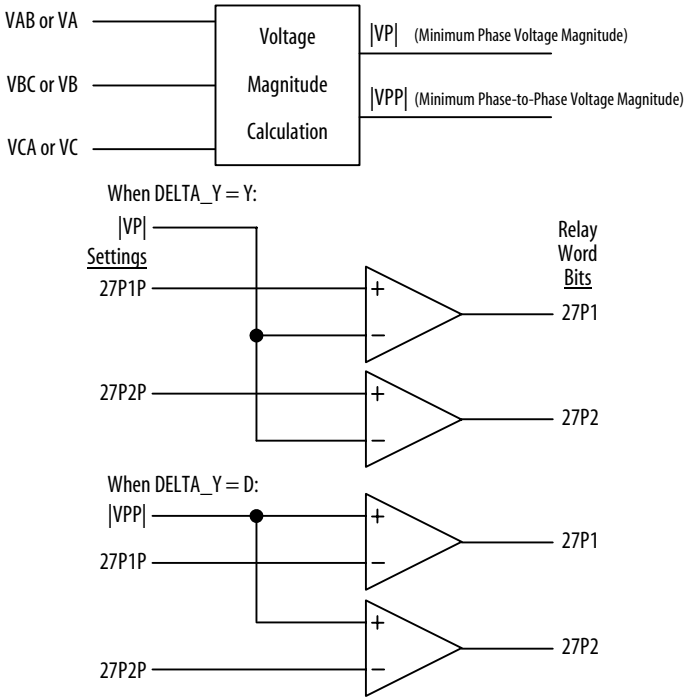

Figure B.9 Undervoltage Element Logic.

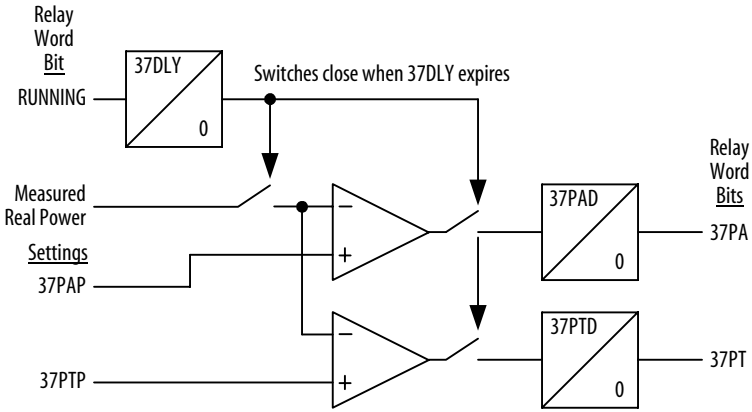

Figure B.10 Underpower Element Logic.

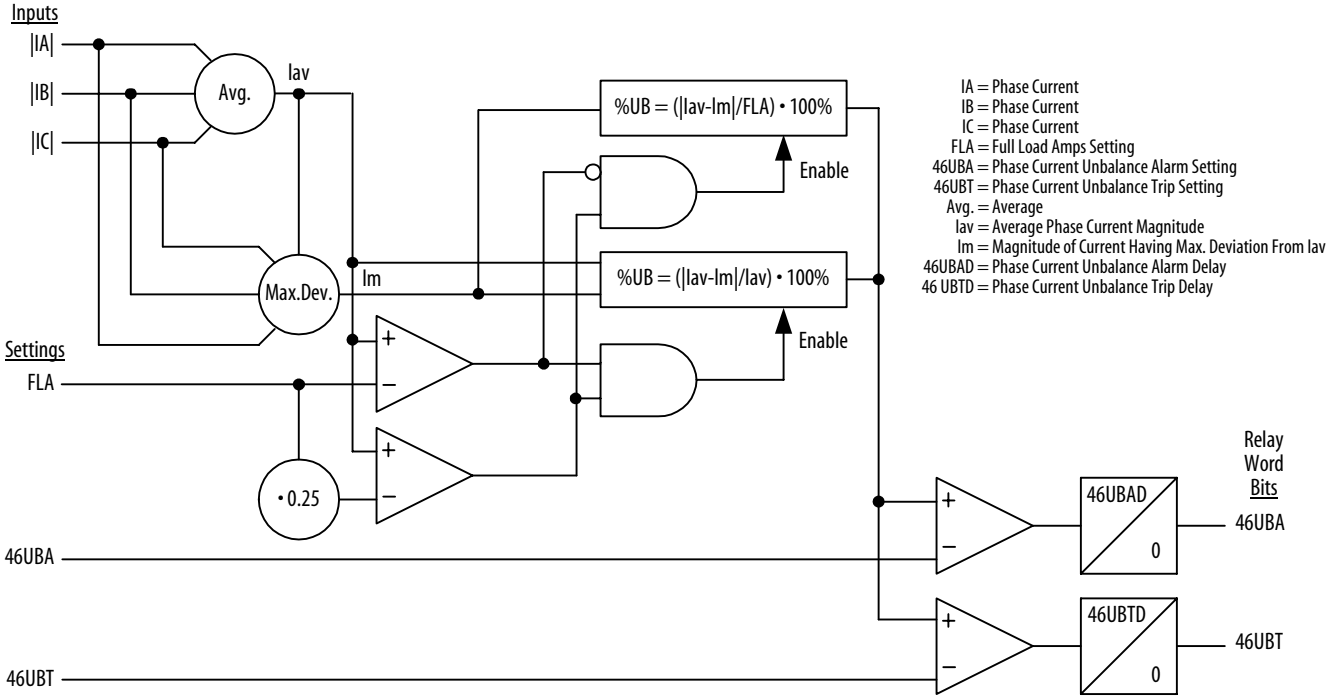

Figure B.11 Current Unbalance Element Logic.

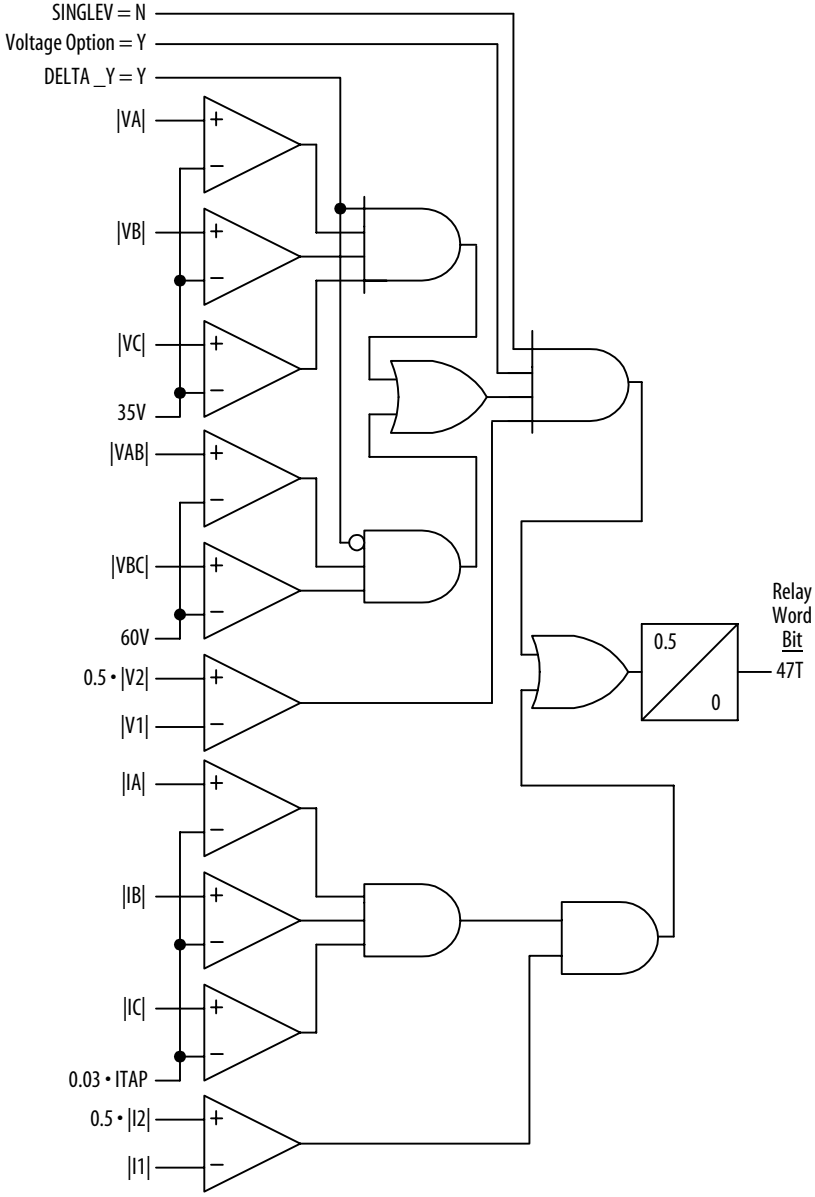

Figure B.12 Phase Reversal Element Logic.

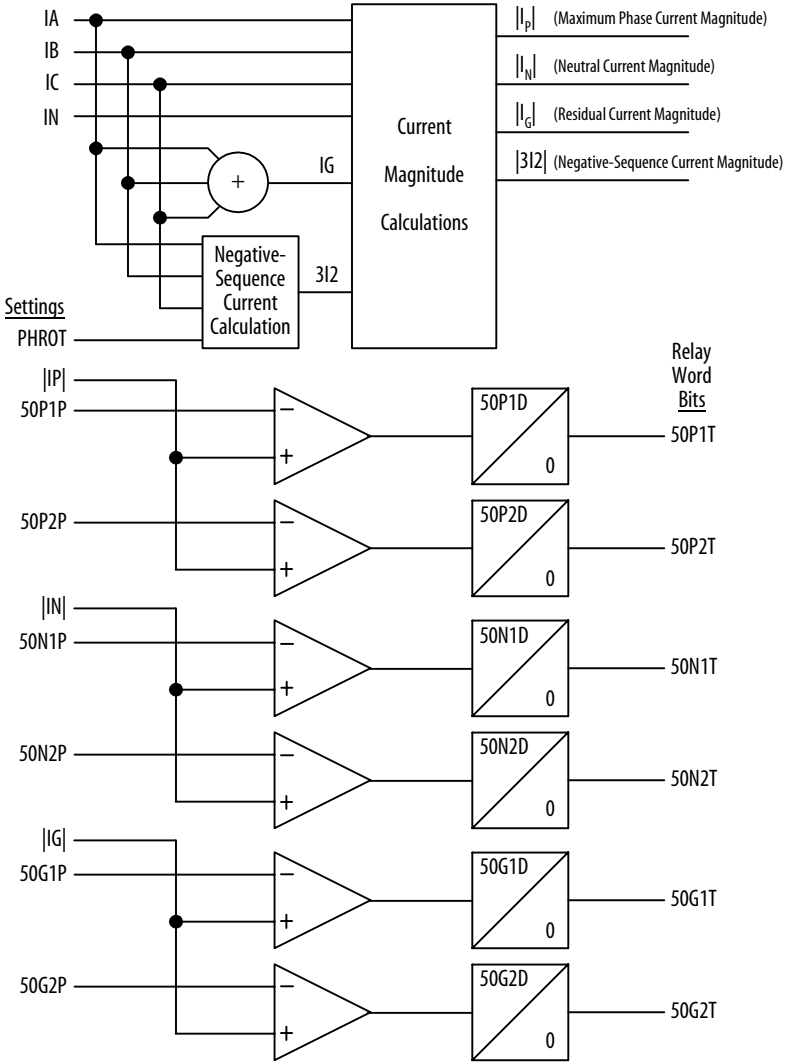

Figure B.13 Overcurrent Element Logic.

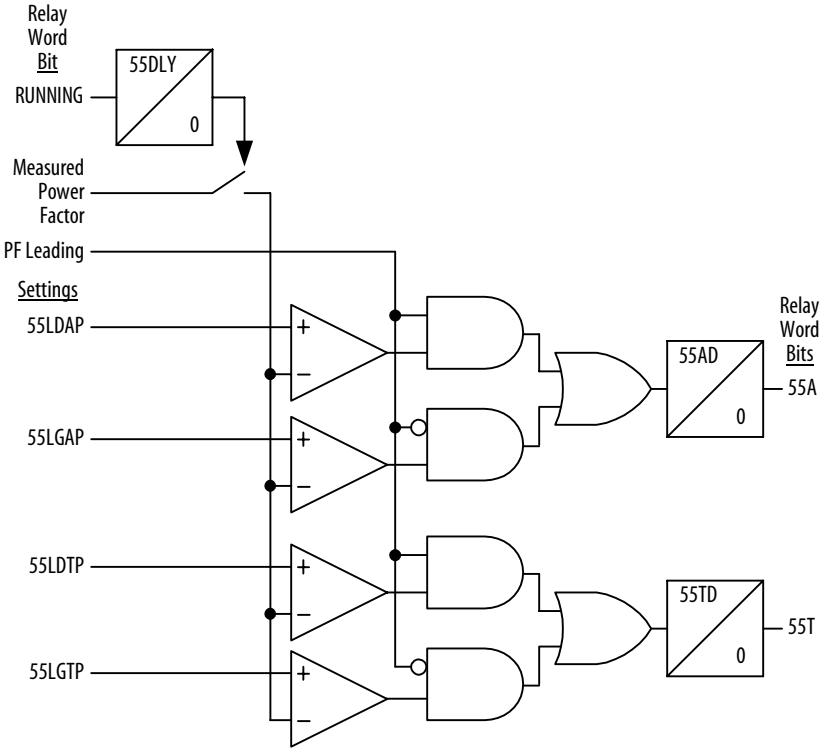

Figure B.14 Power Factor Elements Logic.

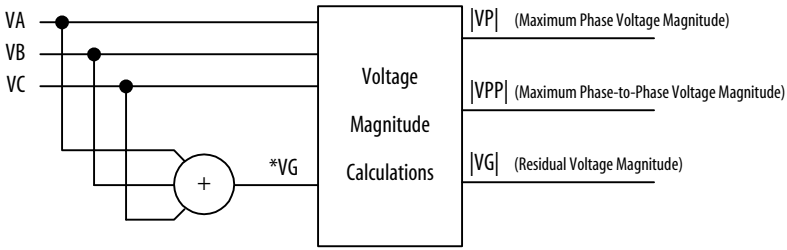

*When DELTA_Y = D, VG is not calculated and phase-to-phase measurements are used.

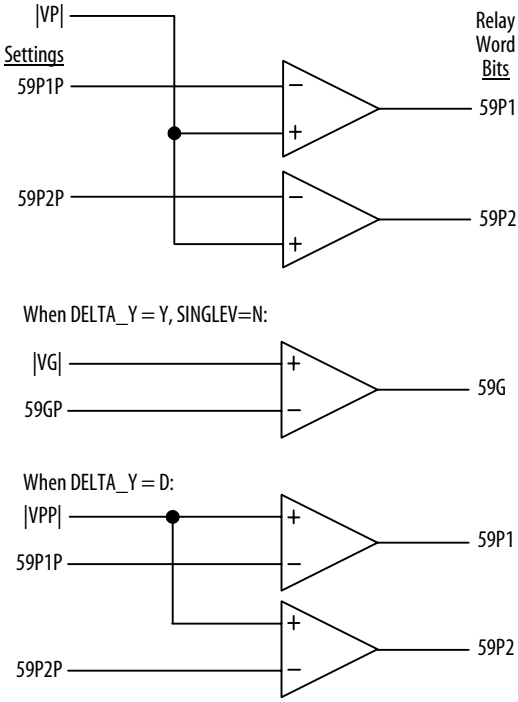

Figure B.15 Overvoltage Element Logic.

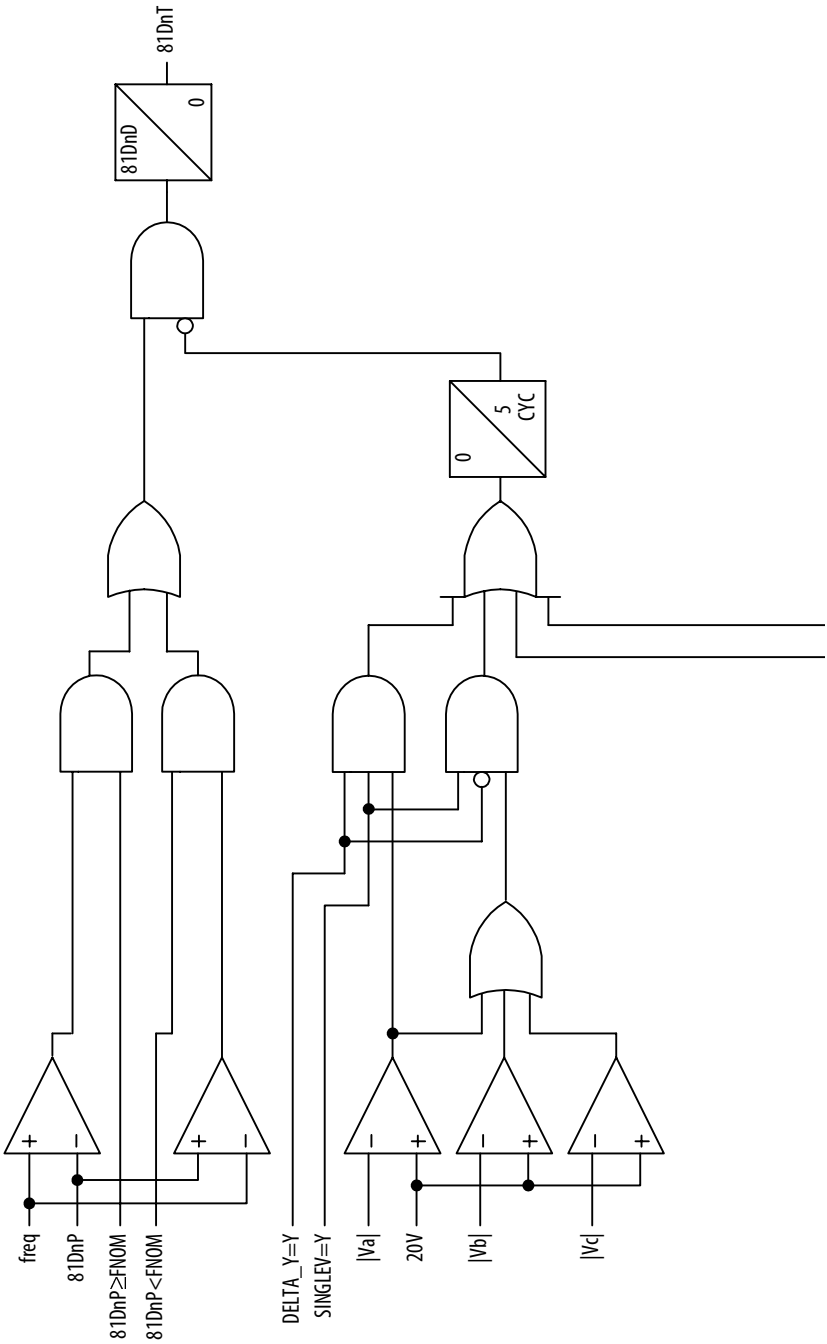
81DnT
81DnD
0
0
5
CYC
freq
81DnP
81DnP≥FNOM
81DnP<FNOM
DELTA_Y=Y
SINGLEV=Y
|Va|
20V
|Vb|
|Vc|

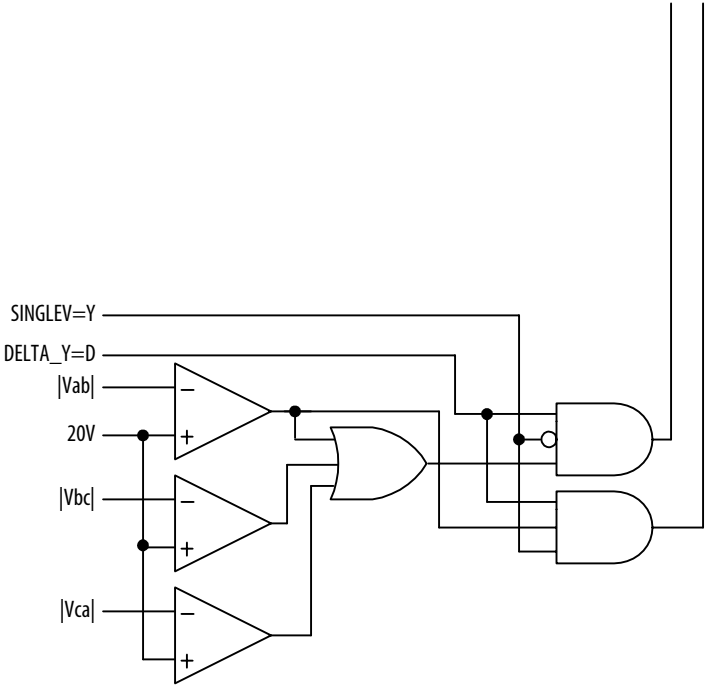

Figure B.16 Over-/Underfrequency Element Logic.

n = Frequency Elements 1-3
freq = Measured Frequency
81DnP = Frequency Pickup Setting
FNOM = Nominal Frequency Setting
SINGLEV = Single PT Enabled
DELTA_Y = Delta PT Enabled
Va = Measured Phase Voltage
Vb = Measured Phase Voltage
Vb = Measured Phase Voltage
Vab = Measured Phase-to-Phase Voltage
Vbc = Measured Phase-to-Phase Voltage
Vca = Measured Phase-to-Phase Voltage
81DnD = Over-/Under Frequency Element Pickup Time Delay
81DnT = Definite-Time Delayed Over-/Underfrequency Element Relay Word Bit

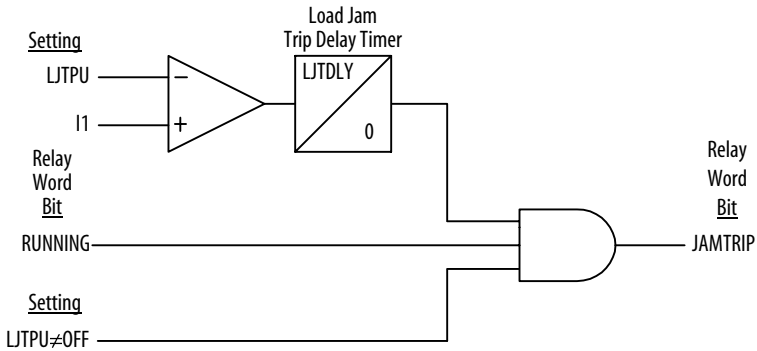

LJTPU = Load-Jam Trip Pickup
I1 = Positive-Sequence Current Magnitude
RUNNING = Motor is Running
LJTDLY = Load-Jam Trip Delay
JAMTRIP = Load-Jam Trip

Figure B.17 Load-Jam Elements Logic.

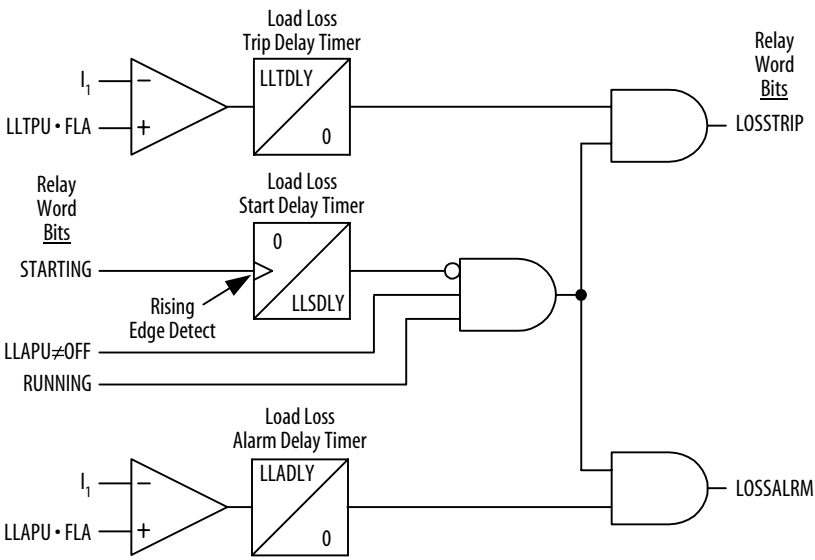

I_1 = Positive-Sequence Current
STARTING = Motor is Starting
RUNNING = Motor is Running
LOSSTRIP = Load Loss Trip
LOSSALRM = Load Loss Alarm
LLTPU = Load LossTrip Pickup Setting
FLA = Full Load Amps Setting
LLAPU = Load Loss Alarm Pickup Setting
LLTDLY = Load Loss Trip Delay Setting
LLSDLY = Load Loss Start Delay Setting
LLADLY = Load Loss Alarm Delay Setting

Figure B.18 Load-Loss Logic; No Voltage Option.

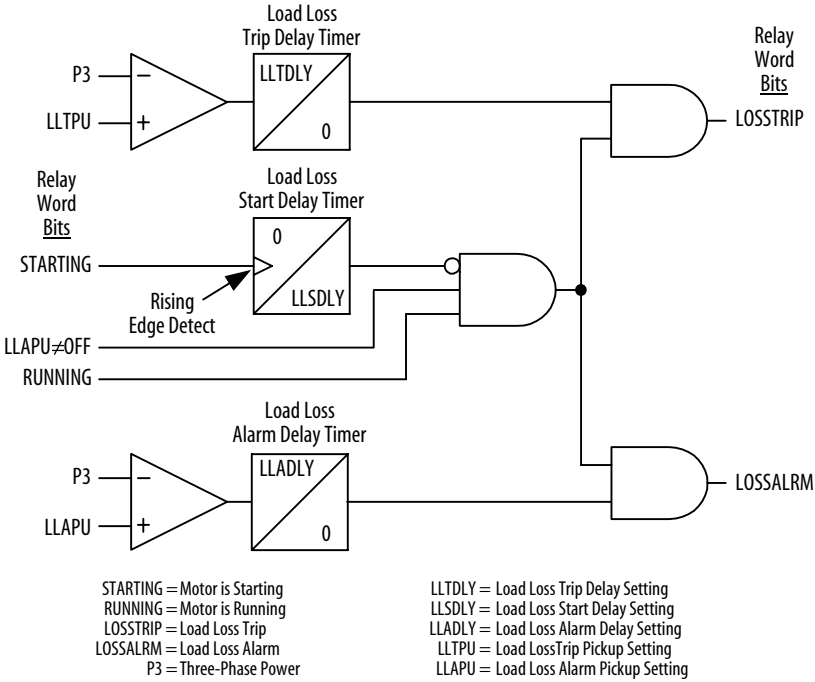

Figure B.19 Load-Loss Logic; Voltage Option Included.

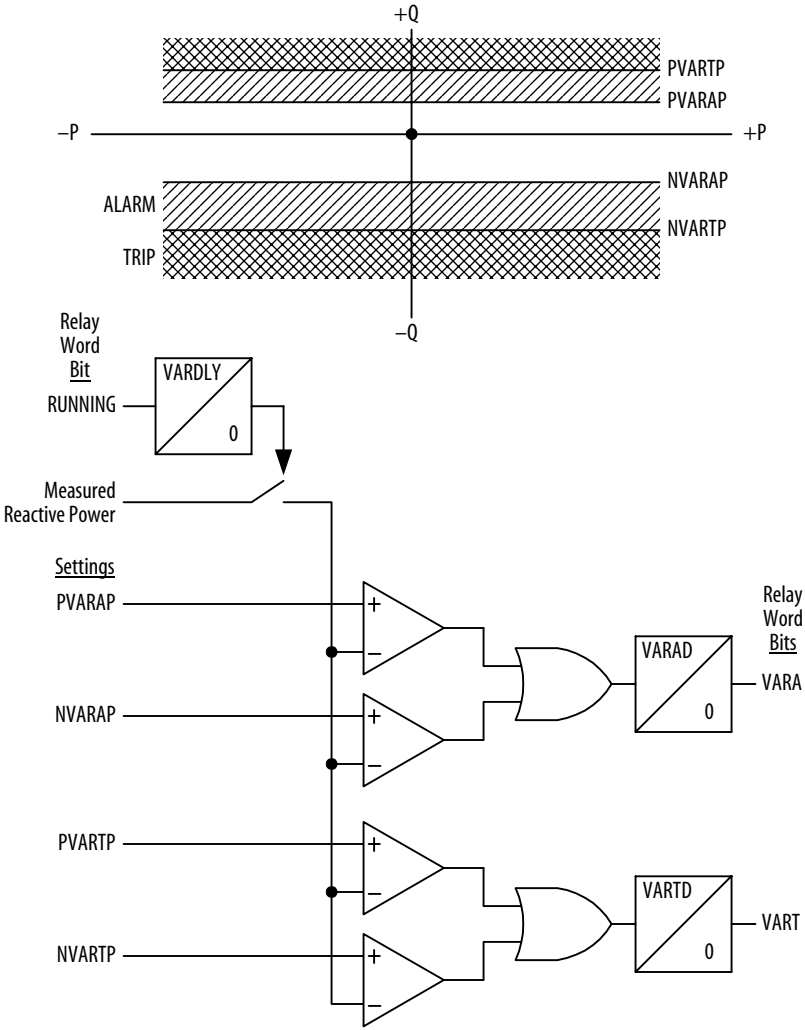

Figure B.20 Reactive Power Elements Logic.

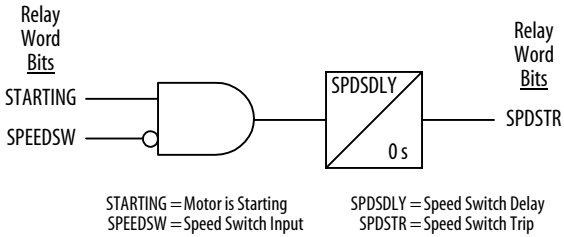

Figure B.21 Speed Switch Tripping Logic.

Appendix C
Modbus® RTU Communications Protocol

Introduction

This appendix describes Modbus® RTU communications features supported by the SEL-701-1 Monitor at the rear-panel EIA-485 port. Complete specifications for the Modbus protocol are available from Modicon on their web site: www.modicon.com.

The SEL-701-1 Monitor supports Modbus RTU protocol when you enable Modbus protocol using the rear-panel serial port settings. When Modbus protocol is enabled, the monitor activates the rear-panel EIA-485 serial port and deactivates the EIA-232 serial port.

Modbus RTU is a binary protocol that permits communication between a single master device and multiple slave devices. The communication is half-duplex: only one device transmits at a time. The master transmits a binary command that includes the address of the desired slave device. All of the slave devices receive the message, but only the slave device having the matching address responds.

The SEL-701-1 Monitor Modbus communication allows a Modbus master device to:

- Acquire metering, monitoring, and event data from the monitor.
- Control SEL-701-1 Monitor output contacts and selected internal logic variables.
- Read the SEL-701-1 Monitor self-test status and learn the present condition of all the monitor protection elements.

Modbus RTU Communications Protocol

Modbus Queries

Modbus RTU master devices initiate all exchanges by sending a query. The query consists of the fields shown in *Table C.1*.

Table C.1 Modbus Query Fields

Field	Number of Bytes
Slave Device Address	1 byte
Function Code	1 byte
Data Region	0-251 bytes
Cyclical Redundancy Check	2 bytes

The SEL-701-1 Monitor SLAVEID setting defines the device address when the monitor rear-panel port is set for Modbus communication. Set this value to a unique number for each device on the Modbus network. For Modbus communication to operate properly, no two slave devices may have the same address.

Function codes supported by the SEL-701-1 Monitor are described in *Table C.2*. The cyclical redundancy check is an error detection method that validates the data received by the slave device and helps ensure that the packet received is identical to the packet sent by the master device. The CRC-16 Cyclical Redundancy Check algorithm is used.

Modbus Responses

The slave device sends a response message after it performs the action requested in the query. If the slave cannot execute the command for any reason, it sends an error response. Otherwise, the slave device response is formatted similarly to the query including the slave address, function code, data if applicable, and a cyclical redundancy check value.

Supported Modbus Function Codes

The SEL-701-1 Monitor supports the Modbus function codes shown in *Table C.2*.

Table C.2 SEL-701-1Monitor Modbus Function Codes

Code	Description
01	Read Coil Status
02	Read Input Status
03	Read Holding Registers
04	Read Input Registers
05[a]	Force Single Coil
06[a]	Preset Single Register
07	Read Exception Status
08	Loopback Diagnostic Command
10h[a]	Preset Multiple Registers

[a] The SEL-701-1 Monitor supports broadcast operation for these function codes. Broadcast function codes use slave device address 00h. Slave devices do not send a response to broadcast functions.

Modbus Exception Responses

The SEL-701-1 Monitor sends an exception code under the conditions described in *Table C.3*.

Table C.3 SEL-701-1 Monitor Modbus Exception Codes

Exception Code	Error Type	Description
1	Illegal Function Code	The received function code is either undefined or unsupported.
2	Illegal Data Address	The received command contains an unsupported address in the data field.
3	Illegal Data Value	The received command contains a value that is out of range.
4	Device Error	The SEL-701-1 Monitor is in the wrong state for the requested function.
6	Busy	The SEL-701-1 Monitor is unable to process the command at this time due to a busy resource.
8	Memory Error	There is a checksum error on the stored data.

In the event that any of the errors listed in *Table C.3* occur, the monitor assembles a response message that includes the Exception Code in the Data field. The monitor sets the Most Significant Bit in the Function Code field to indicate to the master that the data field contains an error code rather than the requested data.

Cyclical Redundancy Check

The SEL-701-1 Monitor calculates a 2-byte CRC value using the device address, function code, and data fields. It appends this value to the end of every Modbus response sent. When the master device receives the response, it uses the received data to recalculate the CRC value using the same CRC-16 algorithm. If the calculated CRC value matches the CRC value sent by the SEL-701-1 Monitor, the master device uses the data received. If there is not a match, the check fails and the message is ignored. The devices use a similar process when the master sends queries.

01h Read Coil Status Command

Use function code 01h to read the On/Off status of selected bits (coils). You may read the status of up to 2000 bits per query. Note that the monitor addresses inputs from 0. The monitor returns 8 bits per byte, most significant bit first, with zeroes padded into incomplete bytes.

Table C.4 01h Read Coil Status Command

Bytes	Field
The Master Request Must Have the Following Format	
1 byte	Slave address
1 byte	Function code (01h)
2 bytes	Address of the first bit
2 bytes	Number bits to read
2 bytes	CRC-16 for message
A Successful SEL-701-1 Monitor Response Will Have the Following Format	
1 byte	Slave address
1 byte	Function code (01h)
1 byte	Byte count
n bytes	Byte count bytes of data
2 bytes	CRC-16 for message

To build the response, the monitor calculates the number of bytes required to contain the number of bits requested. If the number of bits requested is not evenly divisible by 8, the monitor adds one more byte to contain the balance of bits, padded by zeroes to make an even byte.

02h Read Input Status Command

Use function code 02h to read the On/Off status of selected bits. You may read the status of up to 2000 bits per query. Note that the monitor addresses inputs from 0. The monitor returns 8 bits per byte, most significant bit first, with zeroes padded into incomplete bytes.

Table C.5 02h Read Input Status Command

Bytes	Field
The Master Request Must Have the Following Format	
1 byte	Slave address
1 byte	Function code (02h)
2 bytes	Address of the first bit
2 bytes	Number bits to read
2 bytes	CRC-16 for message
A Successful SEL-701-1 Monitor Response Will Have the Following Format	
1 byte	Slave address
1 byte	Function code (02h)
1 byte	Byte count
n bytes	Byte count bytes of data
2 bytes	CRC-16 for message

To build the response, the monitor calculates the number of bytes required to contain the number of bits requested. If the number of bits requested is not evenly divisible by 8, the monitor adds one more byte to contain the balance of bits, padded by zeroes to make an even byte.

03h Read Holding Registers Command

Use function code 03h to read directly from the Modbus Register map shown in *Table C.18 on page C.18*. You may read a maximum of 125 registers at once with this function code. Most masters use 4X references with this function code. If you are accustomed to 4X references with this function code, for 5-digit addressing, add 40001 to the standard database address.

Table C.6 03h Read Holding Registers Command

Bytes	Field
The Master Request Must Have the Following Format	
1 byte	Slave address
1 byte	Function code (03h)
2 bytes	Starting register address
2 bytes	Number of registers to read
2 bytes	CRC-16 for message
A Successful SEL-701-1 Monitor Response Will Have the Following Format	
1 byte	Slave address
1 byte	Function code (03h)
1 byte	Byte count (should be twice number of registers read)
n bytes	Byte count bytes of data
2 bytes	CRC-16 for message

04h Read Input Registers Command

Use function code 04h to read from the Modbus map shown in *Table C.18 on page C.18*. You may read a maximum of 125 registers at once with this function code.

Table C.7 04h Read Input Registers Command

Bytes	Field
The Master Request Must Have the Following Format	
1 byte	Slave address
1 byte	Function code (04h)
2 bytes	Starting register address
2 bytes	Number of registers to read
2 bytes	CRC-16 for message
A Successful SEL-701-1 Monitor Response Will Have the Following Format	
1 byte	Slave address
1 byte	Function code (04h)
1 byte	Byte count (should be twice number of registers read)
n bytes	Byte count bytes of data
2 bytes	CRC-16 for message

05h Force Single Coil Command

The SEL-701-1 Monitor uses this function code for a variety of data control purposes. Specifically, you can use it to clear archive records, operate output contacts, and operate breaker and remote bit elements.

Table C.8 05h Force Single Coil Command

Bytes	Field
The Master Request Must Have the Following Format	
1 byte	Slave address
1 byte	Function code (05h)
2 bytes	Coil reference
1 byte	Operation code (FF for bit set, 00 for bit clear)
1 byte	Placeholder (00)
2 bytes	CRC-16 for message

The command response is identical to the command request.

The SEL-701-1 Monitor offers the commands listed in *Table C.9* that you can execute using function code 05h. The command coils are self-resetting.

Table C.9 SEL-701-1 Monitor Command Coils

Coil	Field
1	Start
2	Stop
3	Emergency Restart
4	Reset Trip, Targets

06h Preset Single Register Command

The SEL-701-1 Monitor uses this function to allow a Modbus master to write directly to a database register. If you are accustomed to 4X references with this function code, for 6-digit addressing, add 400001 to the standard database addresses.

The command response is identical to the command request.

Table C.10 06h Preset Single Register Command

Bytes	Field
The Master Request Must Have the Following Format	
1 byte	Slave address
1 byte	Function code (06h)
2 bytes	Register address
2 bytes	Data
2 bytes	CRC-16 for message

07h Read Exception Status Command

The SEL-701-1 Monitor uses this function to allow a Modbus master to read the present status of the monitor and protected motor.

Table C.11 07h Read Exception Status Command

Bytes	Field
The Master Request Must Have the Following Format	
1 byte	Slave address
1 byte	Function code (07h)
0 bytes	No data fields are sent
2 bytes	CRC-16 for message
A Successful SEL-701-1 Monitor Response Will Have the Following Format	
1 byte	Slave address
1 byte	Function code (07h)
1 byte	Status byte
2 bytes	CRC-16 for message
The Status Byte is Sent LSB-First, and Consists of the Following Bits	
Bit 0	Trip Output Status
Bit 1	OUT1 Output Status
Bit 2	OUT2 Output Status
Bit 3	OUT3 Output Status
Bit 4	ALARM Output Status
Bit 5	0
Bit 6	Motor Stopped
Bit 7	Motor Running

If the bit is set (1), the output contact is asserted or the motor is in the indicated condition. If the bit is cleared (0), the output contact is deasserted or the motor is not in the indicated condition. In the event that both Bits 6 and 7 are cleared, the motor is starting.

08h Loopback Diagnostic Command

The SEL-701-1 Monitor uses this function to allow a Modbus master to perform a diagnostic test on the Modbus communications channel and monitor. When the subfunction field is 0000h, the monitor returns a replica of the received message.

Table C.12 08h Loopback Diagnostic Command

Bytes	Field
The Master Request Must Have the Following Format	
1 byte	Slave address
1 byte	Function code (08h)
2 bytes	Subfunction (0000h)
2 bytes	Data field
2 bytes	CRC-16 for message
A Successful SEL-701-1 Monitor Response Will Have the Following Format	
1 byte	Slave address
1 byte	Function code (08h)
2 bytes	Subfunction (0000h)
2 bytes	Data field
2 bytes	CRC-16 for message

10h Preset Multiple Registers Command

This function code works much like code 06h, except that it allows you to write multiple registers at once, up to 100 per operation. Normally, this function code will only be used to write source addresses in the User map region. If you are accustomed to 4X references with the function code, for 6-digit addressing, simply add 400001 to the standard database addresses.

Table C.13 10h Preset Multiple Registers Command

Bytes	Field
The Master Request Must Have the Following Format	
1 byte	Slave address
1 byte	Function code (10h)
2 bytes	Starting address
2 bytes	Number of registers to write
1 byte	Byte count (should be twice number of registers)
n bytes	Byte count bytes of data
2 bytes	CRC-16 for message
A Successful SEL-701-1 Monitor Response Will Have the Following Format	
1 byte	Slave address
1 byte	Function code (10h)
2 bytes	Starting address
2 bytes	Number of registers
2 bytes	CRC-16 for message

Controlling Output Contacts and Remote Bits Using Modbus

The SEL-701-1 Monitor Modbus Register Map (*Table C.18 on page C.18*) includes three fields that allow a Modbus Master to control monitor output contacts and Relay Word Remote Bits (see *Appendix B: SELogic® Control Equations and Monitor Logic*). Use Modbus function codes 06h or 10h to write the appropriate command codes and parameters into the registers shown in *Table C.14*.

Table C.14 SEL-701-1 Monitor Modbus Command Region

Address	Field
0030h	Command Code
0031h	Parameter 1
0032h	Parameter 2

Table C.15 defines the command codes, their function and associated parameters, and the function code used to initiate the code.

Table C.15 Modbus Command Codes

Command Code	Function	Parameter Definition	Modbus Function Code
01[a]	Start	No Parameters	06h, 10h
02[a]	Stop	No Parameters	06h, 10h
03[a]	Emergency Restart	No Parameters	06h, 10h
04[a]	Reset Trip, Targets	No Parameters	06h, 10h
05	Pulse Output Contacts	Parameter 1: 1 TRIP 2 OUT1 3 OUT2 4 OUT3 5 ALARM Parameter 2: 1-15; Pulse duration in minutes Default to 1 second if not supplied10h Default to 1 second if not supplied10h	10h

Table C.15 Modbus Command Codes (Continued)

Command Code	Function	Parameter Definition	Modbus Function Code
06	Control Remote Bits	Parameter 1: 1 Set Remote Bit 2 Clear Remote Bit 3 Pulse Remote Bit Parameter 2: 0000000000000001 RB1 0000000000000010 RB2 0000000000000100 RB3 0000000000001000 RB4	10h
07	Reset Data Regions	Parameter 1: 0000000000000001 Demand 0000000000000010 Peak Demand 0000000000000100 Max/Min Meter 0000000000001000 Energy Meter 0000000000010000 Motor Statistics 0000000000100000 Event Data 0000000001000000 Thermal Meter	10h

[a] Command Codes 01-04 are also coil numbers which can be set or cleared using Function Code 05. Clearing these coils using Function Code 05 is allowed for compatibility, but has no effect as the monitor immediately acts on and clears set coils.

Parameter 1 of Command Code 7 is bit-masked to allow you to manipulate several Data Regions simultaneously.

Reading the Monitor Status Using Modbus

The SEL-701-1 Monitor Modbus Register Map provides fields that allow you to read the present monitor self-test results. Read the two registers starting with Modbus Map address 160h. *Table C.16* shows how to interpret the results.

Table C.16 Monitor Self-Test Result in Bit Definition

Bits (s)	Definition	
	Register 1	Register 2
0	IA Offset	Temperature
1	IB Offset	RAM
2	IC Offset	ROM
3	IN Offset	CR_RAM
4	VA Offset	EEPROM
5	VB Offset	Battery
6	VC Offset	RTC
7	N Offset	Learned Cool Time
8	5 V PS	Thermal Capacity
9	-5 V PS	Enabled/Disabled
10	15 V PS	Not Used
11	28 V PS	Not Used
12-15	Not Used	Not Used

All bits, except Enabled/Disabled are defined: 0 = Okay; 1 = Failure. The Enabled/Disabled bit is defined: 0 = Enabled; 1 = Disabled.

Reading Event Data Using Modbus

The Modbus Register Map provides a feature that allows you to download complete event data via Modbus. The SEL-701-1 Monitor stores the latest 13 full-length event reports in nonvolatile memory. *Section 8: Event Analysis* contains a complete description of the event data.

Download event summary data by writing an event number to 0371h, then reading the desired data from addresses 0372h through 0395h.

To download analog event data using Modbus, you need to select both the event number (write to 03A1h) and the analog channel number (write to 03A2h), then read the 4-sample per cycle event data from addresses 03A3h through 03DEh. *Table C.17* shows the channel assignments.

Table C.17 Assign Event Report Channel Using Address 03A2h

Set 03A2h Equal To	To Read Data From Channel
1	IA
2	IB
3	IC
4	IG
5	IN
6	VA
7	VB
8	VC
9	Relay Word Rows 1 & 2
10	Relay Word Rows 3 & 4
11	Relay Word Rows 5 & 6
12	Relay Word Rows 7 & 8
13	Relay Word Rows 9 & 10
14	Relay Word Row 11 & 12
15	Relay Word Row 12 & 13
16	Relay Word Row 14 & 15
17	Relay Word Row 16 & 17
18	Relay Word Row 18 & 19
19	Relay Word Row 20 & reserved

Modbus Register Map

Table C.18 Modbus Register Map (Sheet 1 of 36)

Address (hex)	Field	Sample	Low	High	Step	Type
PRODUCT ID						
0000	FID	FID string				
0001						
0002						
0003						
0004						
0005						
0006						
0007						
0008						
0009						
000A						
000B						
000C						
000D						
000E						
000F						
0010						
0011						
0012						
0013						
0014						
0015	Reserved					
0016	Reserved					
0017	Revision	R100				
0018						
0019	Reserved					
001A	Relay ID	SEL-701-1				

Table C.18 Modbus Register Map (Sheet 2 of 36)

Address (hex)	Field	Sample	Low	High	Step	Type
001B						
001C						
001D						
001E						
001F						
0020						
0021						
0022						
0023						
0024	Reserved					
0025	Terminal ID	Monitor				
0026						
0027						
0028						
0029						
002A						
002B						
002C						
002D						
002E						
002F	Reserved					
COMMANDS						
0030	Command Function Code		1	7	1	
0031	Parameter 1		1	255	1	
0032	Parameter 2		1	30	1	
0033-0048	Reserved					

Table C.18 Modbus Register Map (Sheet 3 of 36)

Address (hex)	Field	Sample	Low	High	Step	Type
REAL TIME CLOCK						
004C	Date	mm, dd	1, 1	12, 31	1, 1	
004D		yyyy	0	65535	1	
004E	Time	hh, mm	0, 0	23, 59	1, 1	
004F		ssss	0	5999	1	• 0.01
USER MAP VALUES						
0050	User Map Value # 1					
0051	User Map Value # 2					
0052	User Map Value # 3					
⋮						
00CA	User Map Value # 123					
00CB	User Map Value # 124					
00CC	User Map Value # 125					
00CD	Reserved					
00CE	Reserved					
00CF	Reserved					
USER MAP ADDRESSES						
00D0	User Map Address # 1					
00D1	User Map Address # 2					
00D2	User Map Address # 3					
⋮						
014A	User Map Address # 123					
014B	User Map Address # 124					

Table C.18 Modbus Register Map (Sheet 4 of 36)

Address (hex)	Field	Sample	Low	High	Step	Type
014C	User Map Address # 125					
014D	Reserved					
014E	Reserved					
014F	Reserved					
MONITOR ELEMENTS						
0150	Latched LED Targets, Row 1					
0151	Rows 2, 3					
0152	Rows 4, 5					
0153	Rows 6, 7					
0154	Rows 8, 9					
0155	Rows 10, 11					
0156	Rows 12, 13					
0157	Rows 14, 15					
0158	Rows 16, 17					
0159	Rows 18, 19					
015A	Row 20					
015B–015F	Reserved					
MONITOR STATUS						
0160	Status Register 1		0	2047		
0161	Status Register 2		0	511		
0162-016F	Reserved					
INSTANTANEOUS METERING						
0170	Ia Current		0	65535	1	
0171	Ib Current		0	65535	1	
0172	Ic Current		0	65535	1	

Table C.18 Modbus Register Map (Sheet 5 of 36)

Address (hex)	Field	Sample	Low	High	Step	Type
0173	Average Current		0	65535	1	
0174	In Current		0	65535	1	
0175	Vab Voltage	0 if no voltage option	0	65535	1	
0176	Vbc Voltage	0 if no voltage option	0	65535	1	
0177	Vca Voltage	0 if no voltage option	0	65535	1	
0178	Average Voltage	0 if no voltage option	0	65535	1	
0179	Ia Rms Current		0	65535	1	
017A	Ib Rms Current		0	65535	1	
017B	Ic Rms Current		0	65535	1	
017C	Average Rms Current		0	65535	1	
017D	In Rms Current		0	65535	1	
017E	Vab Rms Voltage	0 if no voltage option	0	65535	1	
017F	Vbc Rms Voltage	0 if no voltage option	0	65535	1	
0180	Vca Rms Voltage	0 if no voltage option	0	65535	1	
0181	Average Rms Voltage	0 if no voltage option	0	65535	1	
0182	kW3P Power	0 if no voltage option	-32768	32767	1	
0183	kW3P Avg Power	0 if no voltage or single volt	-32768	32767	1	
0184	HP	0 if no voltage option	-32768	32767	1	
0185	kVAR3P Power	0 if no voltage option	-32768	32767	1	

Table C.18 Modbus Register Map (Sheet 6 of 36)

Address (hex)	Field	Sample	Low	High	Step	Type
0186	kVA3P Power	0 if no voltage option	-32768	32767	1	
0187	Power Factor	0 if no voltage option	-100	100	1	• 0.01
0188	Ig Current		0	65535	1	
0189	3I2 Current		0	65535	1	
018A	Vg Voltage	0 if no voltage opt or delta	0	65535	1	
018B	3V2 Voltage	0 if no voltage option	0	65535	1	
018C	System Frequency		2000	7000	1	• 0.01
018D	% Unbalance		0	1000	1	• 0.1
018E	Reserved					
018F	Reserved					
THERMAL METERING						
0190	Temperature Preference	67 = C; 70 = F	67	70		
0191	Hottest Winding RTD	See Note[a]	See Note[b]	See Note[b]	1	
0192	Hottest Bearing RTD	See Note[a]	See Note[b]	See Note[b]	1	
0193	Ambient RTD	See Note[a]	See Note[b]	See Note[b]	1	
0194	Hottest Other RTD	See Note[a]	See Note[b]	See Note[b]	1	
0195	RTD #1 Temperature	See Note[c]	See Note[b]	See Note[b]	1	
0196	RTD #2 Temperature	See Note[c]	See Note[b]	See Note[b]	1	
0197	RTD #3 Temperature	See Note[c]	See Note[b]	See Note[b]	1	
0198	RTD #4 Temperature	See Note[c]	See Note[b]	See Note[b]	1	

Table C.18 Modbus Register Map (Sheet 7 of 36)

Address (hex)	Field	Sample	Low	High	Step	Type
0199	RTD #5 Temperature	See Note[c]	See Note[b]	See Note[b]	1	
019A	RTD #6 Temperature	See Note[c]	See Note[b]	See Note[b]	1	
019B	RTD #7 Temperature	See Note[c]	See Note[b]	See Note[b]	1	
019C	RTD #8 Temperature	See Note[c]	See Note[b]	See Note[b]	1	
019D	RTD #9 Temperature	See Note[c]	See Note[b]	See Note[b]	1	
019E	RTD #10 Temperature	See Note[c]	See Note[b]	See Note[b]	1	
019F	RTD #11 Temperature	See Note[c]	See Note[b]	See Note[b]	1	
01A0	RTD #12 Temperature	See Note[c]	See Note[b]	See Note[b]	1	
01A1	% of FLA		0	65535	1	• 0.1
01A2	% Thermal Capacity		0	65535	1	• 0.1
01A3	RTD % Thermal Capacity	0 if no RTDs available	0	65535	1	
01A4	Time to Trip	ss	0	9999	1, 1	
01A5	Minutes Since Last Start		0	65535	1	
01A6	Starts This Hour		0	99	1	
01A7	Reserved					
01A8	Reserved					
01A9	Reserved					
01AA	Reserved					
01AB	Reserved					
01AC	Reserved					
01AD	Reserved					

Table C.18 Modbus Register Map (Sheet 8 of 36)

Address (hex)	Field	Sample	Low	High	Step	Type
01AE	Reserved					
01AF	Reserved					
ENERGY METERING						
01B0	MWhr	0 if no voltage option	0	65535	1	
01B1	MVARhr In	0 if no voltage option	0	65535	1	
01B2	MVARhr Out	0 if no voltage option	0	65535	1	
01B3	MVAhr	0 if no voltage option	0	65535	1	
01B4	Last Reset Date	mm, dd	1, 1	12, 31	1, 1	
01B5		yyyy	0	65535	1	
01B6	Last Reset Time	hh, mm	0, 0	23, 59	1, 1	
01B7		ssss	0	5999	1	• 0.01
01B8	Reserved					
01B9	Reserved					
01BA	Reserved					
01BB	Reserved					
01BC	Reserved					
01BD	Reserved					
01BE	Reserved					
01BF	Reserved					
DEMAND METERING						
01C0	Ia Demand		0	65535	1	
01C1	Ib Demand		0	65535	1	
01C2	Ic Demand		0	65535	1	
01C3	In Demand		0	65535	1	
01C4	Ig Demand		0	65535	1	
01C5	3I2 Demand		0	65535	1	

Table C.18 Modbus Register Map (Sheet 9 of 36)

Address (hex)	Field	Sample	Low	High	Step	Type
01C6	kW3P Demand	0 if no voltage option	0	65535	1	
01C7	kVAR3P Demand In	0 if no voltage option	0	65535	1	
01C8	kVAR3P Demand Out	0 if no voltage option	0	65535	1	
01C9	kVA3P Demand	0 if no voltage option	0	65535	1	
01CA	Last Reset Date	mm, dd	1, 1	12, 31	1, 1	
01CB		yyyy	0	65535	1	
01CC	Last Reset Time	hh, mm	0, 0	23, 59	1, 1	
01CD		ssss	0	5999	1	• 0.01
01CE	Reserved					
01CF	Reserved					
PEAK DEMAND METERING						
01D0	Ia Peak Demand		0	65535	1	
01D1	Ib Peak Demand		0	65535	1	
01D2	Ic Peak Demand		0	65535	1	
01D3	In Peak Demand		0	65535	1	
01D4	Ig Peak Demand		0	65535	1	
01D5	3I2 Peak Demand		0	65535	1	
01D6	kW3P Peak Demand	0 if no voltage option	0	65535	1	
01D7	kVAR3P Peak Demand In	0 if no voltage option	0	65535	1	
01D8	kVAR3P Peak Demand Out	0 if no voltage option	0	65535	1	

Table C.18 Modbus Register Map (Sheet 10 of 36)

Address (hex)	Field	Sample	Low	High	Step	Type
01D9	kVA3P Peak Demand	0 if no voltage option	0	65535	1	
01DA	Last Reset Date	mm, dd	1, 1	12, 31	1, 1	
01DB		yyyy	0	65535	1	
01DC	Last Reset Time	hh, mm	0, 0	23, 59	1, 1	
01DD		ssss	0	5999	1	• 0.01
01DE	Reserved					
01DF	Reserved					
CURRENT MAX/MIN METERING						
01E0	Ia Max Current	(FFFFh if reset)	0	65535	1	
01E1	Ia Max Current Date	mm, dd (FFFFh if reset)	1, 1	12, 31	1, 1	
01E2		yyyy (FFFFh if reset)	0	65535	1	
01E3	Ia Max Current Time	hh, mm (FFFFh if reset)	0, 0	23, 59	1, 1	
01E4		ssss (FFFFh if reset)	0	5999	1	• 0.01
01E5	Ia Min Current	(FFFFh if reset)	0	65535	1	
01E6	Ia Min Current Date	mm, dd (FFFFh if reset)	1, 1	12, 31	1, 1	
01E7		yyyy (FFFFh if reset)	0	65535	1	
01E8	Ia Min Current Time	hh, mm (FFFFh if reset)	0, 0	23, 59	1, 1	
01E9		ssss (FFFFh if reset)	0	5999	1	• 0.01
01EA	Ib Max Current	(FFFFh if reset)	0	65535	1	
01EB	Ib Max Current Date	mm, dd (FFFFh if reset)	1, 1	12, 31	1, 1	

Table C.18 Modbus Register Map (Sheet 11 of 36)

Address (hex)	Field	Sample	Low	High	Step	Type
01EC		yyyy (FFFFh if reset)	0	65535	1	
01ED	Ib Max Current Time	hh, mm (FFFFh if reset)	0, 0	23, 59	1, 1	
01EE		ssss (FFFFh if reset)	0	5999	1	• 0.01
01EF	Ib Min Current	(FFFFh if reset)	0	65535	1	
01F0	Ib Min Current Date	mm, dd (FFFFh if reset)	1, 1	12, 31	1, 1	
01F1		yyyy (FFFFh if reset)	0	65535	1	
01F2	Ib Min Current Time	hh, mm (FFFFh if reset)	0, 0	23, 59	1, 1	
01F3		ssss (FFFFh if reset)	0	5999	1	• 0.01
01F4	Ic Max Current	(FFFFh if reset)	0	65535	1	
01F5	Ic Max Current Date	mm, dd (FFFFh if reset)	1, 1	12, 31	1, 1	
01F6		yyyy (FFFFh if reset)	0	65535	1	
01F7	Ic Max Current Time	hh, mm (FFFFh if reset)	0, 0	23, 59	1, 1	
01F8		ssss (FFFFh if reset)	0	5999	1	• 0.01
01F9	Ic Min Current	(FFFFh if reset)	0	65535	1	
01FA	Ic Min Current Date	mm, dd (FFFFh if reset)	1, 1	12, 31	1, 1	
01FB		yyyy (FFFFh if reset)	0	65535	1	
01FC	Ic Min Current Time	hh, mm (FFFFh if reset)	0, 0	23, 59	1, 1	
01FD		ssss (FFFFh if reset)	0	5999	1	• 0.01
01FE	In Max Current	(FFFFh if reset)	0	65535	1	

Table C.18 Modbus Register Map (Sheet 12 of 36)

Address (hex)	Field	Sample	Low	High	Step	Type
01FF	In Max Current Date	mm, dd (FFFFh if reset)	1, 1	12, 31	1, 1	
0200		yyyy (FFFFh if reset)	0	65535	1	
0201	In Max Current Time	hh, mm (FFFFh if reset)	0, 0	23, 59	1, 1	
0202		ssss (FFFFh if reset)	0	5999	1	• 0.01
0203	In Min Current	(FFFFh if reset)	0	65535	1	
0204	In Min Current Date	mm, dd (FFFFh if reset)	1, 1	12, 31	1, 1	
0205		yyyy (FFFFh if reset)	0	65535	1	
0206	In Min Current Time	hh, mm (FFFFh if reset)	0, 0	23, 59	1, 1	
0207		ssss (FFFFh if reset)	0	5999	1	• 0.01
0208	Ig Max Current	(FFFFh if reset)	0	65535	1	
0209	Ig Max Current Date	mm, dd (FFFFh if reset)	1, 1	12, 31	1, 1	
020A		yyyy (FFFFh if reset)	0	65535	1	
020B	Ig Max Current Time	hh, mm (FFFFh if reset)	0, 0	23, 59	1, 1	
020C		ssss (FFFFh if reset)	0	5999	1	• 0.01
020D	Ig Min Current	(FFFFh if reset)	0	65535	1	
020E	Ig Min Current Date	mm, dd (FFFFh if reset)	1, 1	12, 31	1, 1	
020F		yyyy (FFFFh if reset)	0	65535	1	
0210	Ig Min Current Time	hh, mm (FFFFh if reset)	0, 0	23, 59	1, 1	
0211		ssss (FFFFh if reset)	0	5999	1	• 0.01

Table C.18 Modbus Register Map (Sheet 13 of 36)

Address (hex)	Field	Sample	Low	High	Step	Type
0212	Last Reset Date	mm, dd (FFFFh if reset)	1, 1	12, 31	1, 1	
0213		yyyy (FFFFh if reset)	0	65535	1	
0214	Last Reset Time	hh, mm (FFFFh if reset)	0, 0	23, 59	1, 1	
0215		ssss (FFFFh if reset)	0	5999	1	• 0.01
0216-021F	Reserved					
RTD MAX/MIN METERING						
0220	RTD # 1 Max Temperature	FFFFh if reset or no RTD	See Note[b]	See Note[b]	1	
0221	RTD # 1 Max Temperature Date	mm, dd (FFFFh if reset)	1, 1	12, 31	1, 1	
0222		yyyy (FFFFh if reset)	0	65535	1	
0223	RTD # 1 Max Temperature Time	hh, mm (FFFFh if reset)	0, 0	23, 59	1, 1	
0224		ssss (FFFFh if reset)	0	5999	1	• 0.01
0225	RTD # 1 Min Temperature	FFFFh if reset or no RTD	See Note[b]	See Note[b]	1	
0226	RTD # 1 Min Temperature Date	mm, dd (FFFFh if reset)	1, 1	12, 31	1, 1	
0227		yyyy (FFFFh if reset)	0	65535	1	
0228	RTD # 1 Min Temperature Time	hh, mm (FFFFh if reset)	0, 0	23, 59	1, 1	
0229		ssss (FFFFh if reset)	0	5999	1	• 0.01
022A	RTD # 2 Max Temperature	FFFFh if reset or no RTD	See Note[b]	See Note[b]	1	

Table C.18 Modbus Register Map (Sheet 14 of 36)

Address (hex)	Field	Sample	Low	High	Step	Type
022B	RTD # 2 Max Temperature Date	mm, dd (FFFFh if reset)	1, 1	12, 31	1, 1	
022C		yyyy (FFFFh if reset)	0	65535	1	
022D	RTD # 2 Max Temperature Time	hh, mm (FFFFh if reset)	0, 0	23, 59	1, 1	
022E		ssss (FFFFh if reset)	0	5999	1	• 0.01
022F	RTD # 2 Min Temperature	FFFFh if reset or no RTD	See Note[b]	See Note[b]	1	
0230	RTD # 2 Min Temperature Date	mm, dd (FFFFh if reset)	1, 1	12, 31	1, 1	
0231		yyyy (FFFFh if reset)	0	65535	1	
0232	RTD # 2 Min Temperature Time	hh, mm (FFFFh if reset)	0, 0	23, 59	1, 1	
0233		ssss (FFFFh if reset)	0	5999	1	• 0.01
0234	RTD # 3 Max Temperature	FFFFh if reset or no RTD	See Note[b]	See Note[b]	1	
0235	RTD # 3 Max Temperature Date	mm, dd (FFFFh if reset)	1, 1	12, 31	1, 1	
0236		yyyy (FFFFh if reset)	0	65535	1	
0237	RTD # 3 Max Temperature Time	hh, mm (FFFFh if reset)	0, 0	23, 59	1, 1	
0238		ssss (FFFFh if reset)	0	5999	1	• 0.01
0239	RTD # 3 Min Temperature	FFFFh if reset or no RTD	See Note[b]	See Note[b]	1	

Table C.18 Modbus Register Map (Sheet 15 of 36)

Address (hex)	Field	Sample	Low	High	Step	Type
023A	RTD # 3 Min Temperature Date	mm, dd (FFFFh if reset)	1, 1	12, 31	1, 1	
023B		yyyy (FFFFh if reset)	00	65535	1	
023C	RTD # 3 Min Temperature Time	hh, mm (FFFFh if reset)	0, 0	23, 59	1, 1	
023D		ssss (FFFFh if reset)	0	5999	1	• 0.01
023E	RTD # 4 Max Temperature	FFFFh if reset or no RTD	See Note[b]	See Note[b]	1	
023F	RTD # 4 Max Temperature Date	mm, dd (FFFFh if reset)	1, 1	12, 31	1, 1	
0240		yyyy (FFFFh if reset)	0	65535	1	
0241	RTD # 4 Max Temperature Time	hh, mm (FFFFh if reset)	0, 0	23, 59	1, 1	
0242		ssss (FFFFh if reset)	0	5999	1	• 0.01
0243	RTD # 4 Min Temperature	FFFFh if reset or no RTD	See Note[b]	See Note[b]	1	
0244	RTD # 4 Min Temperature Date	mm, dd (FFFFh if reset)	1, 1	12, 31	1, 1	
0245		yyyy (FFFFh if reset)	0	65535	1	
0246	RTD # 4 Min Temperature Time	hh, mm (FFFFh if reset)	0, 0	23, 59	1, 1	
0247		ssss (FFFFh if reset)	0	5999	1	• 0.01
0248	RTD # 5 Max Temperature	FFFFh if reset or no RTD	See Note[b]	See Note[b]	1	

Table C.18 Modbus Register Map (Sheet 16 of 36)

Address (hex)	Field	Sample	Low	High	Step	Type
0249	RTD # 5 Max Temperature Date	mm, dd (FFFFh if reset)	1, 1	12, 31	1, 1	
024A		yyyy (FFFFh if reset)	0	65535	1	
024B	RTD # 5 Max Temperature Time	hh, mm (FFFFh if reset)	0, 0	23, 59	1, 1	
024C		ssss (FFFFh if reset)	0	5999	1	• 0.01
024D	RTD # 5 Min Temperature	FFFFh if reset or no RTD	See Note[b]	See Note[b]	1	
024E	RTD # 5 Min Temperature Date	mm, dd (FFFFh if reset)	1, 1	12, 31	1, 1	
024F		yyyy (FFFFh if reset)	0	65535	1	
0250	RTD # 5 Min Temperature Time	hh, mm (FFFFh if reset)	0, 0	23, 59	1, 1	
0251		ssss (FFFFh if reset)	0	5999	1	• 0.01
0252	RTD # 6 Max Temperature	FFFFh if reset or no RTD	See Note[b]	See Note[b]	1	
0253	RTD # 6 Max Temperature Date	mm, dd (FFFFh if reset)	1, 1	12, 31	1, 1	
0254		yyyy (FFFFh if reset)	0	65535	1	
0255	RTD # 6 Max Temperature Time	hh, mm (FFFFh if reset)	0, 0	23, 59	1, 1	
0256		ssss (FFFFh if reset)	0	5999	1	• 0.01
0257	RTD # 6 Min Temperature	FFFFh if reset or no RTD	See Note[b]	See Note[b]	1	

Table C.18 Modbus Register Map (Sheet 17 of 36)

Address (hex)	Field	Sample	Low	High	Step	Type
0258	RTD # 6 Min Temperature Date	mm, dd (FFFFh if reset)	1, 1	12, 31	1, 1	
0259		yyyy (FFFFh if reset)	0	65535	1	
025A	RTD # 6 Min Temperature Time	hh, mm (FFFFh if reset)	0, 0	23, 59	1, 1	
025B		ssss (FFFFh if reset)	0	5999	1	• 0.01
025C	RTD # 7 Max Temperature	FFFFh if reset or no RTD	See Note[b]	See Note[b]	1	
025D	RTD # 7 Max Temperature Date	mm, dd (FFFFh if reset)	1, 1	12, 31	1, 1	
025E		yyyy (FFFFh if reset)	0	65535	1	
025F	RTD # 7 Max Temperature Time	hh, mm (FFFFh if reset)	0, 0	23, 59	1, 1	
0260		ssss (FFFFh if reset)	0	5999	1	• 0.01
0261	RTD # 7 Min Temperature	FFFFh if reset or no RTD	See Note[b]	See Note[b]	1	
0262	RTD # 7 Min Temperature Date	mm, dd (FFFFh if reset)	1, 1	12, 31	1, 1	
0263		yyyy (FFFFh if reset)	0	65535	1	
0264	RTD # 7 Min Temperature Time	hh, mm (FFFFh if reset)	0, 0	23, 59	1, 1	
0265		ssss (FFFFh if reset)	0	5999	1	• 0.01
0266	RTD # 8 Max Temperature	FFFFh if reset or no RTD	See Note[b]	See Note[b]	1	

Table C.18 Modbus Register Map (Sheet 18 of 36)

Address (hex)	Field	Sample	Low	High	Step	Type
0267	RTD # 8 Max Temperature Date	mm, dd (FFFFh if reset)	1, 1	12, 31	1, 1	
0268		yyyy (FFFFh if reset)	0	65535	1	
0269	RTD # 8 Max Temperature Time	hh, mm (FFFFh if reset)	0, 0	23, 59	1, 1	
026A		ssss (FFFFh if reset)	0	5999	1	• 0.01
026B	RTD # 8 Min Temperature	FFFFh if reset or no RTD	See Note[b]	See Note[b]	1	
026C	RTD # 8 Min Temperature Date	mm, dd (FFFFh if reset)	1, 1	12, 31	1, 1	
026D		yyyy (FFFFh if reset)	0	65535	1	
026E	RTD # 8 Min Temperature Time	hh, mm (FFFFh if reset)	0, 0	23, 59	1, 1	
026F		ssss (FFFFh if reset)	0	5999	1	• 0.01
0270	RTD # 9 Max Temperature	FFFFh if reset or no RTD	See Note[b]	See Note[b]	1	
0271	RTD # 9 Max Temperature Date	mm, dd (FFFFh if reset)	1, 1	12, 31	1, 1	
0272		yyyy (FFFFh if reset)	0	65535	1	
0273	RTD # 9 Max Temperature Time	hh, mm (FFFFh if reset)	0, 0	23, 59	1, 1	
0274		ssss (FFFFh if reset)	0	5999	1	• 0.01
0275	RTD # 9 Min Temperature	FFFFh if reset or no RTD	See Note[b]	See Note[b]	1	

Table C.18 Modbus Register Map (Sheet 19 of 36)

Address (hex)	Field	Sample	Low	High	Step	Type
0276	RTD # 9 Min Temperature Date	mm, dd (FFFFh if reset)	1, 1	12, 31	1, 1	
0277		yyyy (FFFFh if reset)	0	65535	1	
0278	RTD # 9 Min Temperature Time	hh, mm (FFFFh if reset)	0, 0	23, 59	1, 1	
0279		ssss (FFFFh if reset)	0	5999	1	• 0.01
027A	RTD # 10 Max Temperature	FFFFh if reset or no RTD	See Note[b]	See Note[b]	1	
027B	RTD # 10 Max Temperature Date	mm, dd (FFFFh if reset)	1, 1	12, 31	1, 1	
027C		yyyy (FFFFh if reset)	0	65535	1	
027D	RTD # 10 Max Temperature Time	hh, mm (FFFFh if reset)	0, 0	23, 59	1, 1	
027E		ssss (FFFFh if reset)	0	5999	1	• 0.01
027F	RTD # 10 Min Temperature	FFFFh if reset or no RTD	See Note[b]	See Note[b]	1	
0280	RTD # 10 Min Temperature Date	mm, dd (FFFFh if reset)	1, 1	12, 31	1, 1	
0281		yyyy (FFFFh if reset)	0	65535	1	
0282	RTD # 10 Min Temperature Time	hh, mm (FFFFh if reset)	0, 0	23, 59	1, 1	
0283		ssss (FFFFh if reset)	0	5999	1	• 0.01
0284	RTD # 11 Max Temperature	FFFFh if reset or no RTD	See Note[b]	See Note[b]	1	

Table C.18 Modbus Register Map (Sheet 20 of 36)

Address (hex)	Field	Sample	Low	High	Step	Type
0285	RTD # 11 Max Temperature Date	mm, dd (FFFFh if reset)	1, 1	12, 31	1, 1	
0286		yyyy (FFFFh if reset)	0	65535	1	
0287	RTD # 11 Max Temperature Time	hh, mm (FFFFh if reset)	0, 0	23, 59	1, 1	
0288		ssss (FFFFh if reset)	0	5999	1	• 0.01
0289	RTD # 11 Min Temperature	FFFFh if reset or no RTD	See Note[b]	See Note[b]	1	
028A	RTD # 11 Min Temperature Date	mm, dd (FFFFh if reset)	1, 1	12, 31	1, 1	
028B		yyyy (FFFFh if reset)	0	65535	1	
028C	RTD # 11 Min Temperature Time	hh, mm (FFFFh if reset)	0, 0	23, 59	1, 1	
028D		ssss (FFFFh if reset)	0	5999	1	• 0.01
028E	RTD # 12 Max Temperature	FFFFh if reset or no RTD	See Note[b]	See Note[b]	1	
028F	RTD # 12 Max Temperature Date	mm, dd (FFFFh if reset)	1, 1	12, 31	1, 1	
0290		yyyy (FFFFh if reset)	0	65535	1	
0291	RTD # 12 Max Temperature Time	hh, mm (FFFFh if reset)	0, 0	23, 59	1, 1	
0292		ssss (FFFFh if reset)	0	5999	1	• 0.01
0293	RTD # 12 Min Temperature	FFFFh if reset or no RTD	See Note[b]	See Note[b]	1	

Table C.18 Modbus Register Map (Sheet 21 of 36)

Address (hex)	Field	Sample	Low	High	Step	Type
0294	RTD # 12 Min Temperature Date	mm, dd (FFFFh if reset)	1, 1	12, 31	1, 1	
0295		yyyy (FFFFh if reset)	0	65535	1	
0296	RTD # 12 Min Temperature Time	hh, mm (FFFFh if reset)	0, 0	23, 59	1, 1	
0297		ssss (FFFFh if reset)	0	5999	1	• 0.01
0298	Last Reset Date	mm, dd (FFFFh if reset)	1, 1	12, 31	1, 1	
0299		yyyy (FFFFh if reset)	0	65535	1	
029A	Last Reset Time	hh, mm (FFFFh if reset)	0, 0	23, 59	1, 1	
029B		ssss (FFFFh if reset)	0	5999	1	• 0.01
029C	Reserved					
029D	Reserved					
029E	Reserved					
029F	Reserved					
VOLTAGE/POWER MAX/MIN METERING						
02A0	Vab Max Voltage	(FFFFh if reset or no voltage option)	0	65535	1	
02A1	Vab Max Voltage Date	mm, dd (FFFFh if reset)	1, 1	12, 31	1, 1	
02A2		yyyy (FFFFh if reset)	0	65535	1	
02A3	Vab Max Voltage Time	hh, mm (FFFFh if reset)	0, 0	23, 59	1, 1	
02A4		ssss (FFFFh if reset)	0	5999	1	• 0.01

Table C.18 Modbus Register Map (Sheet 22 of 36)

Address (hex)	Field	Sample	Low	High	Step	Type
02A5	Vab Min Voltage	(FFFFh if reset or no voltage option)	0	65535	1	
02A6	Vab Min Voltage Date	mm, dd (FFFFh if reset)	1, 1	12, 31	1, 1	
02A7		yyyy (FFFFh if reset)	0	65535	1	
02A8	Vab Min Voltage Time	hh, mm (FFFFh if reset)	0, 0	23, 59	1, 1	
02A9		ssss (FFFFh if reset)	0	5999	1	• 0.01
02AA	Vbc Max Voltage	(FFFFh if reset or no voltage option)	0	65535	1	
02AB	Vbc Max Voltage Date	mm, dd (FFFFh if reset)	1, 1	12, 31	1, 1	
02AC		yyyy (FFFFh if reset)	0	65535	1	
02AD	Vbc Max Voltage Time	hh, mm (FFFFh if reset)	0, 0	23, 59	1, 1	
02AE		ssss (FFFFh if reset)	0	5999	1	• 0.01
02AF	Vbc Min Voltage	(FFFFh if reset or no voltage option)	0	65535	1	
02B0	Vbc Min Voltage Date	mm, dd (FFFFh if reset)	1, 1	12, 31	1, 1	
02B1		yyyy (FFFFh if reset)	0	65535	1	
02B2	Vbc Min Voltage Time	hh, mm (FFFFh if reset)	0, 0	23, 59	1, 1	
02B3		ssss (FFFFh if reset)	0	5999	1	• 0.01
02B4	Vca Max Voltage	(FFFFh if reset or no voltage option)	0	65535	1	
02B5	Vca Max Voltage Date	mm, dd (FFFFh if reset)	1, 1	12, 31	1, 1	

Table C.18 Modbus Register Map (Sheet 23 of 36)

Address (hex)	Field	Sample	Low	High	Step	Type
02B6		yyyy (FFFFh if reset)	0	65535	1	
02B7	Vca Max Voltage Time	hh, mm (FFFFh if reset)	0, 0	23, 59	1, 1	
02B8		ssss (FFFFh if reset)	0	5999	1	• 0.01
02B9	Vca Min Voltage	(FFFFh if reset or no voltage option)	0	65535	1	
02BA	Vca Min Voltage Date	mm, dd (FFFFh if reset)	1, 1	12, 31	1, 1	
02BB		yyyy (FFFFh if reset)	0	65535	1	
02BC	Vca Min Voltage Time	hh, mm (FFFFh if reset)	0, 0	23, 59	1, 1	
02BD		ssss (FFFFh if reset)	0	5999	1	• 0.01
02BE	Vg Max Voltage	(FFFFh if reset or no voltage option)	0	65535	1	
02BF	Vg Max Voltage Date	mm, dd (FFFFh if reset)	1, 1	12, 31	1, 1	
02C0		yyyy (FFFFh if reset)	0	65535	1	
02C1	Vg Max Voltage Time	hh, mm (FFFFh if reset)	0, 0	23, 59	1, 1	
02C2		ssss (FFFFh if reset)	0	5999	1	• 0.01
02C3	Vg Min Voltage	(FFFFh if reset or no voltage option)	0	65535	1	
02C4	Vg Min Voltage Date	mm, dd (FFFFh if reset)	1, 1	12, 31	1, 1	
02C5		yyyy (FFFFh if reset)	0	65535	1	
02C6	Vg Min Voltage Time	hh, mm (FFFFh if reset)	0, 0	23, 59	1, 1	

Table C.18 Modbus Register Map (Sheet 24 of 36)

Address (hex)	Field	Sample	Low	High	Step	Type
02C7		ssss (FFFFh if reset)	0	5999	1	• 0.01
02C8	Max kW3P Power	(FFFFh if reset or no voltage option)	-32768	32767	1	
02C9	Max kW3P Power Date	mm, dd (FFFFh if reset)	1, 1	12, 31	1, 1	
02CA		yyyy (FFFFh if reset)	0	65535	1	
02CB	Max kW3P Power Time	hh, mm (FFFFh if reset)	0, 0	23, 59	1, 1	
02CC		ssss (FFFFh if reset)	0	5999	1	• 0.01
02CD	Min kW3P Power	(FFFFh if reset or no voltage option)	-32768	32767	1	
02CE	Min kW3P Power Date	mm, dd (FFFFh if reset)	1, 1	12, 31	1, 1	
02CF		yyyy (FFFFh if reset)	0	65535	1	
02D0	Min kW3P Power Time	hh, mm (FFFFh if reset)	0, 0	23, 59	1, 1	
02D1		ssss (FFFFh if reset)	0	5999	1	• 0.01
02D2	Max kVAR3P Power	(FFFFh if reset or no voltage option)	-32768	32767	1	
02D3	Max kVAR3P Power Date	mm, dd (FFFFh if reset)	1, 1	12, 31	1, 1	
02D4		yyyy (FFFFh if reset)	0	65535	1	
02D5	Max kVAR3P Power Time	hh, mm (FFFFh if reset)	0, 0	23, 59	1, 1	
02D6		ssss (FFFFh if reset)	0	5999	1	• 0.01
02D7	Min kVAR3P Power	(FFFFh if reset or no voltage option)	-32768	32767	1	

Table C.18 Modbus Register Map (Sheet 25 of 36)

Address (hex)	Field	Sample	Low	High	Step	Type
02D8	Min kVAR3P Power Date	mm, dd (FFFFh if reset)	1, 1	12, 31	1, 1	
02D9		yyyy (FFFFh if reset)	0	65535	1	
02DA	Min kVAR3P Power Time	hh, mm (FFFFh if reset)	0, 0	23, 59	1, 1	
02DB		ssss (FFFFh if reset)	0	5999	1	• 0.01
02DC	Max kVA3P Power	(FFFFh if reset or no voltage option)	0	65535	1	
02DD	Max kVA3P Power Date	mm, dd (FFFFh if reset)	1, 1	12, 31	1, 1	
02DE		yyyy (FFFFh if reset)	0	65535	1	
02DF	Max kVA3P Power Time	hh, mm (FFFFh if reset)	0, 0	23, 59	1, 1	
02E0		ssss (FFFFh if reset)	0	5999	1	• 0.01
02E1	Min kVA3P Power	(FFFFh if reset or no voltage option)	0	65535	1	
02E2	Min kVA3P Power Date	mm, dd (FFFFh if reset)	1, 1	12, 31	1, 1	
02E3		yyyy (FFFFh if reset)	0	65535	1	
02E4	Min kVA3P Power Time	hh, mm (FFFFh if reset)	0, 0	23, 59	1, 1	
02E5		ssss (FFFFh if reset)	0	5999	1	• 0.01
02E6	Last Reset Date	mm, dd (FFFFh if reset)	1, 1	12, 31	1, 1	
02E7		yyyy (FFFFh if reset)	0	65535	1	
02E8	Last Reset Time	hh, mm (FFFFh if reset)	0, 0	23, 59	1, 1	

Table C.18 Modbus Register Map (Sheet 26 of 36)

Address (hex)	Field	Sample	Low	High	Step	Type
02E9		ssss (FFFFh if reset)	0	5999	1	• 0.01
02EA	Reserved					
02EB	Reserved					
02EC	Reserved					
02ED	Reserved					
02EE	Reserved					
02EF	Reserved					
MOTOR STATISTICS						
02F0	Elapsed Time	ddd	0	65535	1	
02F1		hh, mm	0, 0	23, 59	1, 1	
02F2	Running Time	ddd	0	65535	1	
02F3		hh, mm	0, 0	23, 59	1, 1	
02F4	Stopped Time	ddd	0	65535	1	
02F5		hh, mm	0, 1	23, 60	1, 2	
02F6	% Time Running		0	1000	1	• 0.1
02F7	MegaWhr		0	65535	1	
02F8	# of Starts		0	65535	1	
02F9	Avg Starting Time	seconds	0	65535	1	• 0.01
02FA	Avg Starting Current		0	65535	1	
02FB	Avg Minimum Starting Voltage	0 if no voltage option	0	65535	1	
02FC	Avg Starting % Therm Cap		0	65535	1	• 0.1
02FD	Avg Running % Therm Cap		0	65535	1	• 0.1
02FE	Avg RTD % Therm Cap		0	65535	1	
02FF	Avg Running Current		0	65535	1	

Table C.18 Modbus Register Map (Sheet 27 of 36)

Address (hex)	Field	Sample	Low	High	Step	Type
0300	Avg Running kW	0 if no voltage option	0	65535	1	
0301	Avg Running kVAR In	0 if no voltage option	0	65535	1	
0302	Avg Running kVAR Out	0 if no voltage option	0	65535	1	
0303	AvgRunning kVA	0 if no voltage option	0	65535	1	
0304	Avg Hottest Winding RTD Temp	See Note[a]	See Note[b]	See Note[b]	1	
0305	Avg Hottest Bearing RTD Temp	See Note[a]	See Note[b]	See Note[b]	1	
0306	Avg Ambient RTD Temp	See Note[a]	See Note[b]	See Note[b]	1	
0307	Avg Hottest Other RTD Temp	See Note[a]	See Note[b]	See Note[b]	1	
0308	Peak Starting Time	seconds	0	65535	1	• 0.01
0309	Peak Starting Current		0	65535	1	
030A	Peak Minimum Starting Voltage	0 if no voltage option	0	65535	1	
030B	Peak Starting % Therm Cap		0	65535	1	• 0.1
030C	Peak Running % Therm Cap		0	65535	1	• 0.1
030D	Peak RTD % Therm Cap		0	65535	1	
030E	Peak Running Current		0	65535	1	
030F	Peak Running kW	0 if no voltage option	0	65535	1	

Table C.18 Modbus Register Map (Sheet 28 of 36)

Address (hex)	Field	Sample	Low	High	Step	Type
0310	Peak Running kVAR In	0 if no voltage option	0	65535	1	
0311	Peak Running kVAR Out	0 if no voltage option	0	65535	1	
0312	Peak Running kVA	0 if no voltage option	0	65535	1	
0313	Peak Hottest Winding RTD Temp	See Note[a]	See Note[b]	See Note[b]	1	
0314	Peak Hottest Bearing RTD Temp	See Note[a]	See Note[b]	See Note[b]	1	
0315	Peak Ambient RTD Temp	See Note[a]	See Note[b]	See Note[b]	1	
0316	Peak Hottest Other RTD Temp	See Note[a]	See Note[b]	See Note[b]	1	
0317	Stopped Cooling Time	Minutes	0	65535	1	• 0.1
0318	Starting Thermal Capacity		0	65535	1	• 0.1
0319	Thermal Alarm Count		0	65535	1	
031A	Locked Rotor Alarm Count		0	65535	1	
031B	Load Loss Alarm Count		0	65535	1	
031C	Unbalance Current Alarm Count		0	65535	1	
031D	Under Power Alarm Count		0	65535	1	
031E	Power Factor Alarm Count		0	65535	1	
031F	Reactive Power Alarm Count		0	65535	1	

Table C.18 Modbus Register Map (Sheet 29 of 36)

Address (hex)	Field	Sample	Low	High	Step	Type
0320	RTD Alarm Count		0	65535	1	
0321	Total Alarm Count		0	65535	1	
0322	Thermal Trip Count		0	65535	1	
0323	Locked Rotor Trip Count		0	65535	1	
0324	Load Loss Trip Count		0	65535	1	
0325	Load Jam Trip Count		0	65535	1	
0326	Unbalance Current Trip Count		0	65535	1	
0327	Phase Fault Trip Count		0	65535	1	
0328	Ground Fault Trip Count		0	65535	1	
0329	Speed Switch Trip Count		0	65535	1	
032A	Undervoltage Trip Count		0	65535	1	
032B	Overvoltage Trip Count		0	65535	1	
032C	Under Power Trip Count		0	65535	1	
032D	Power Factor Trip Count		0	65535	1	
032E	Reactive Power Trip Count		0	65535	1	
032F	Phase Reversal Trip Count		0	65535	1	
0330	Under-frequency Trip Count		0	65535	1	

Table C.18 Modbus Register Map (Sheet 30 of 36)

Address (hex)	Field	Sample	Low	High	Step	Type
0331	Over-frequency Trip Count		0	65535	1	
0332	RTD Trip		0	65535	1	
0333	Total Trip		0	65535	1	
0334	Reset Date	mm, dd	1, 1	12, 31	1, 1	
0335		yyyy	0	65535	1	
0336	Reset Time	hh, mm	0, 0	23, 59	1, 1	
0337		ssss	0	5999	1	• 0.01
0338	Reserved					
0339	Reserved					
033A	Reserved					
033B	Reserved					
033C	Reserved					
033D	Reserved					
033E	Reserved					
033F	Reserved					
START REPORT SUMMARIES						
0340	Latest Accel Time	seconds	0	65535	1	• 0.01
0341	Latest Starting % Therm Cap		0	65535	1	• 0.1
0342	Latest Max Start Current		0	65535	1	
0343	Latest Min Start Voltage	0 if no voltage option	0	65535	1	
0344	Latest Start Date	mm, dd	1, 1	12, 31	1, 1	
0345		yyyy	0	65535	1	
0346	Latest Start Time	hh, mm	0, 0	23, 59	1, 1	
0347		ssss	0	5999	1	• 0.01

Table C.18 Modbus Register Map (Sheet 31 of 36)

Address (hex)	Field	Sample	Low	High	Step	Type
0348	2nd Latest Accel Time	seconds	0	65535	1	• 0.01
0349	2nd Latest Starting % Therm Cap		0	65535	1	• 0.1
034A	2nd Latest Max Start Current		0	65535	1	
034B	2nd Latest Min Start Voltage	0 if no voltage option	0	65535	1	
034C	2nd Latest Start Date	mm, dd	1, 1	12, 31	1, 1	
034D		yyyy	0	65535	1	
034E	2nd Latest Start Time	hh, mm	0, 0	23, 59	1, 1	
034F		ssss	0	5999	1	• 0.01
0350	3rd Latest Accel Time	seconds	0	65535	1	• 0.01
0351	3rd Latest Starting % Therm Cap		0	65535	1	• 0.1
0352	3rd Latest Max Start Current		0	65535	1	
0353	3rd Latest Min Start Voltage	0 if no voltage option	0	65535	1	
0354	3rd Latest Start Date	mm, dd	1, 1	12, 31	1, 1	
0355		yyyy	0	65535	1	
0356	3rd Latest Start Time	hh, mm	0, 0	23, 59	1, 1	
0357		ssss	0	5999	1	• 0.01
0358	4th Latest Accel Time	seconds	0	65535	1	• 0.01

Table C.18 Modbus Register Map (Sheet 32 of 36)

Address (hex)	Field	Sample	Low	High	Step	Type
0359	4th Latest Starting % Therm Cap		0	65535	1	• 0.1
035A	4th Latest Max Start Current		0	65535	1	
035B	4th Latest Min Start Voltage	0 if no voltage option	0	65535	1	
035C	4th Latest Start Date	mm, dd	1, 1	12, 31	1, 1	
035D		yyyy	0	65535	1	
035E	4th Latest Start Time	hh, mm	0, 0	23, 59	1, 1	
035F		ssss	0	5999	1	• 0.01
0360	5th Latest Accel Time	seconds	0	65535	1	• 0.01
0361	5th Latest Starting % Therm Cap		0	65535	1	• 0.1
0362	5th Latest Max Start Current		0	65535	1	
0363	5th Latest Min Start Voltage	0 if no voltage option	0	65535	1	
0364	5th Latest Start Date	mm, dd	1, 1	12, 31	1, 1	
0365		yyyy	0	65535	1	
0366	5th Latest Start Time	hh, mm	0, 0	23, 59	1, 1	
0367		ssss	0	5999	1	• 0.01
0368-036F	Reserved					
HISTORY RECORDS						
0370	Number of Event Records		0	13	1	
0371	Event Selection		1	13	1	
0372	Event Date	mm, dd	1, 1	12, 31	1, 1	

Table C.18 Modbus Register Map (Sheet 33 of 36)

Address (hex)	Field	Sample	Low	High	Step	Type
0373		yyyy	0	65535	1	
0374	Event Time	hh, mm	0, 0	23, 59	1, 1	
0375		ssss	0	5999	1	• 0.01
0376	Event Type	See Note[d]				
0377						
0378						
0379						
037A						
037B						
037C						
037D						
037E						
037F						
0380						
0381						
0382	Ia		0	65535	1	
0383	Ib		0	65535	1	
0384	Ic		0	65535	1	
0385	In		0	65535	1	
0386	Ig		0	65535	1	
0387	3I2		0	65535	1	
0388	Hottest Winding RTD	See Note[a]	See Note[b]	See Note[b]	1	
0389	Hottest Bearing RTD	See Note[a]	See Note[b]	See Note[b]	1	
038A	Ambient RTD	See Note[a]	See Note[b]	See Note[b]	1	
038B	Hottest Other RTD	See Note[a]	See Note[b]	See Note[b]	1	
038C	Vab	0 if no voltage option	0	65535	1	
038D	Vbc	0 if no voltage option	0	65535	1	

Table C.18 Modbus Register Map (Sheet 34 of 36)

Address (hex)	Field	Sample	Low	High	Step	Type
038E	Vca	0 if no voltage option	0	65535	1	
038F	kW	0 if no voltage option	-32768	32767	1	
0390	kVAR	0 if no voltage option	-32768	32767	1	
0391	kVA	0 if no voltage option	-32768	32767	1	
0392	Power Factor	0 if no voltage option	-100	100	1	• 0.01
0393	Frequency		2000	7000	1	• 0.01
0394	% Thermal Cap		0	65535	1	• 0.1
0395	% Unbalance Current		0	1000	1	• 0.1
0396-039F	Reserved					
EVENT RECORDS						
03A0	Number of Event Records		0	14	1	
03A1	Event Selection		1	13	1	
03A2	Channel Selection		1	19	1	
03A3	1/4 Cycle		-32768	32767	1	
03A4	2/4 Cycle		-32768	32767	1	
03A5	3/4 Cycle		-32768	32767	1	
03A6	1 Cycle		-32768	32767	1	
03A7	1 1/4 Cycle		-32768	32767	1	
03A8	1 2/4 Cycle		-32768	32767	1	
03A9	1 3/4 Cycle		-32768	32767	1	
03AA	2 Cycle		-32768	32767	1	
03AB	2 1/4 Cycle		-32768	32767	1	
03AC	2 2/4 Cycle		-32768	32767	1	

Table C.18 Modbus Register Map (Sheet 35 of 36)

Address (hex)	Field	Sample	Low	High	Step	Type
03AD	2 3/4 Cycle		-32768	32767	1	
03AE	3 Cycle		-32768	32767	1	
03AF	3 1/4 Cycle		-32768	32767	1	
03B0	3 2/4 Cycle		-32768	32767	1	
03B1	3 3/4 Cycle		-32768	32767	1	
03B2	4 Cycle		-32768	32767	1	
03B3	4 1/4 Cycle		-32768	32767	1	
03B4	4 2/4 Cycle		-32768	32767	1	
03B5	4 3/4 Cycle		-32768	32767	1	
03B6	5 Cycle		-32768	32767	1	
03B7	5 1/4 Cycle		-32768	32767	1	
03B8	5 2/4 Cycle		-32768	32767	1	
03B9	5 3/4 Cycle		-32768	32767	1	
03BA	6 Cycle		-32768	32767	1	
03BB	6 1/4 Cycle		-32768	32767	1	
03BC	6 2/4 Cycle		-32768	32767	1	
03BD	6 3/4 Cycle		-32768	32767	1	
03BE	7 Cycle		-32768	32767	1	
03BF	7 1/4 Cycle		-32768	32767	1	
03C0	7 2/4 Cycle		-32768	32767	1	
03C1	7 3/4 Cycle		-32768	32767	1	
03C2	8 Cycle		-32768	32767	1	
03C3	8 1/4 Cycle		-32768	32767	1	
03C4	8 2/4 Cycle		-32768	32767	1	
03C5	8 3/4 Cycle		-32768	32767	1	
03C6	9 Cycle		-32768	32767	1	
03C7	9 1/4 Cycle		-32768	32767	1	
03C8	9 2/4 Cycle		-32768	32767	1	
03C9	9 3/4 Cycle		-32768	32767	1	
03CA	10 Cycle		-32768	32767	1	
03CB	10 1/4 Cycle		-32768	32767	1	

Table C.18 Modbus Register Map (Sheet 36 of 36)

Address (hex)	Field	Sample	Low	High	Step	Type
03CC	10 2/4 Cycle		-32768	32767	1	
03CD	10 3/4 Cycle		-32768	32767	1	
03CE	11 Cycle		-32768	32767	1	
03CF	11 1/4 Cycle		-32768	32767	1	
03D0	11 2/4 Cycle		-32768	32767	1	
03D1	11 3/4 Cycle		-32768	32767	1	
03D2	12 Cycle		-32768	32767	1	
03D3	12 1/4 Cycle		-32768	32767	1	
03D4	12 2/4 Cycle		-32768	32767	1	
03D5	12 3/4 Cycle		-32768	32767	1	
03D6	13 Cycle		-32768	32767	1	
03D7	13 1/4 Cycle		-32768	32767	1	
03D8	13 2/4 Cycle		-32768	32767	1	
03D9	13 3/4 Cycle		-32768	32767	1	
03DA	14 Cycle		-32768	32767	1	
03DB	14 1/4 Cycle		-32768	32767	1	
03DC	14 2/4 Cycle		-32768	32767	1	
03DD	14 3/4 Cycle		-32768	32767	1	
03DE	15 Cycle		-32768	32767	1	
03DF	Reserved					

[a] Summary RTD Temperature Addresses can contain the following diagnostic codes:
7ffeh = Fail
7ff0h = Not Attached or Not Available

[b] RTD Temperature Range Depends on the monitor temperature preference setting:
°C: Low = -50; High = 250
°F: Low = -58; High = 482

[c] Individual RTD Temperature Addresses can contain the following diagnostic codes:
8000h = RTD shorted
7fffh = RTD open
7ffdh = RTD reset
7ffch = SEL-2600 RTD Module Communication Failure
7ff8h = SEL-2600 RTD Module Self-Test Status Failure
7ff0h = RTD Not Attached or Not Available

[d] The event type is reported as a character string as shown below:

EVENT TYPE STRING:

THERMAL
LOCKED ROTOR
LOAD LOSS
LOAD JAM
UNBALANCED CURRENT
PHASE FAULT
GROUND FAULT
SPEED SWITCH
UNDERVOLTAGE
OVERVOLTAGE
UNDERPOWER
POWER FACTOR
REACTIVE POWER
PHASE REVERSAL
UNDERFREQUENCY
OVERFREQUENCY
RTD
STOP COMMAND
TRIP
ER
PULSE
TRIG

Appendix D

SEL-2020/SEL-2030 Compatibility Features

Introduction

This appendix describes communication features that the SEL-701-1 Monitor serial ports support when they are configured for ASCII communications. These functions are not provided on the monitor EIA-485 port when it is configured for Modbus® protocol support.

SEL monitors have two separate data streams that share the same EIA-232 serial port. The monitor supports communication with people using ASCII character commands and formatted responses that are intelligible using a terminal or terminal emulation package. In addition, the monitor includes a class of compressed-ASCII commands. These command responses include ASCII characters but are formatted in a way that makes them more compact. They are typically better suited to software analysis than analysis using a terminal emulation package.

Interleaved with the ASCII data stream, the monitor can receive and respond to a set of binary commands. This mechanism allows a single communications channel to be used for ASCII communications (e.g., transmission of a long event report) interleaved with short bursts of binary data to support fast acquisition of metering data. The requesting device must be equipped to execute the binary commands, then separate and interpret the binary response. The binary commands and ASCII commands can also be accessed by a device that does not interleave the data streams.

SEL *Application Guide AG95-10, Configuration and Fast Meter Messages*, is a comprehensive description of the SEL binary messages.

Fast Binary Message Lists

Binary Message List

Table D.1 Binary Message List

Request to Monitor	Response From Monitor
Hex	
A5C0	Monitor Definition Block
A5C1	Fast Meter Configuration Block
A5D1	Fast Meter Data Block
A5C2	Demand Fast Meter Configuration Block
A5D2	Demand Fast Meter Data Message
A5C3	Peak Demand Fast Meter Configuration Block
A5D3	Peak Demand Fast Meter Data Message
A5B9	Fast Meter Status Acknowledge
A5CE	Fast Operate Configuration Block
A5E0	Fast Operate Remote Bit Control
A5E3	Fast Operate Breaker/Contactor Control

ASCII Configuration Message List

Table D.2 ASCII Configuration Message List

Request to Monitor	Response From Monitor
ASCII	
ID	ASCII Relay Identification and Configuration Strings
DNA	ASCII Names of Relay Word Bits
BNA	ASCII Names of Bits in the A5B9 Status Byte

Fast Binary Message Definitions

A5C0 Monitor Definition Block

In response to the A5C0 request, the monitor sends the block shown in *Table D.3*.

Table D.3 A5C0 Monitor Definition Block

Data	Description
A5C0	Command
48	Length
02	Support two protocols
03	Support three Fast Meter messages
06	Support three status flag commands
A5C1	Fast Meter configuration command
A5D1	Fast Meter command
A5C2	Demand Fast Meter configuration command
A5D2	Demand Fast Meter command
A5C3	Peak Demand Fast Meter configuration command
A5D3	Peak Demand Fast Meter command
0004	Settings change bit
A5C100000000	Fast Meter configuration message
0004	Settings change bit
A5C200000000	Demand Fast Meter configuration message
0004	Settings change bit
A5C300000000	Peak Demand Fast Meter configuration message
0004	Settings change bit
444E410D0000	DNA Command
0004	Settings change bit
49440D000000	ID Command
0004	Settings change bit
4341530D0000	CAS Command
0100	SEL protocol, Fast Operate
0002	Modbus protocol
00	Reserved
checksum	1-byte checksum of preceding bytes

A5C1 Fast Meter Configuration Block

In response to the A5C1 request, the SEL-701-1 Monitor sends the block shown in *Table D.4*.

Table D.4 A5C1 Fast Meter Configuration Block *(Sheet 1 of 5)*

Data	Description
A5C1	Fast Meter command
xx	Response Length in Bytes *(specific value of xxbased on monitor model, as shown below)*
	0x6C Base Monitor
	0x94 Monitor with RTDs
	0xD0 Monitor with voltages
	0xF8 Monitor with RTDs, voltages
01	One status flag byte
00	Scale factors in Fast Meter message
00	No scale factors
xx	# of analog input channels *(specific value of xxbased on monitor model, as shown below)*
	09 Base Monitor
	0D Monitor with RTDs
	13 Monitor with voltages
	17 Monitor with RTDs, voltages
01	# of samples per channel
16	# of digital banks
00	# of calculation blocks
0004	Analog channel offset
xxxx	Time stamp offset *(specific value of xxxx based on monitor model, as shown below)*
	0028 Base Monitor
	0030 Monitor with RTDs
	0050 Monitor with voltages
	0058 Monitor with RTDs, voltages

Table D.4 A5C1 Fast Meter Configuration Block *(Sheet 2 of 5)*

Data	Description
xxxx	Digital offset *(specific value of xxxx based on monitor model, as shown below)* 0030 Base Monitor 0038 Monitor with RTDs 0058 Monitor with voltages 0060 Monitor with RTDs, voltages
494100000000	Analog channel name (IA)
01	Analog channel type
FF	Scale factor type
0000	Scale factor offset in Fast Meter message
494200000000	Analog channel name (IB)
01	Analog channel type
FF	Scale factor type
0000	Scale factor offset in Fast Meter message
494300000000	Analog channel name (IC)
01	Analog channel type
FF	Scale factor type
0000	Scale factor offset in Fast Meter message
334932000000	Analog channel name (3I2)
01	Analog channel type
FF	Scale factor type
25556E62616C	Analog channel name (%Unbal)
25556E62616C	Analog channel name (%Unbal)
01	Analog channel type
FF	Scale factor type
0000	Scale factor offset in Fast Meter message
465245510000	Analog channel name (Freq)
01	Analog channel type
FF	Scale factor type
0000	Scale factor offset in Fast Meter message

Table D.4 A5C1 Fast Meter Configuration Block *(Sheet 3 of 5)*

Data	Description
25544845524D	Analog channel name (%Therm)
01	Analog channel type
FF	Scale factor type
0000	Scale factor offset in Fast Meter message
25464C410000	Analog channel name (%FLA)
01	Analog channel type
FF	Scale factor type
0000	Scale factor offset in Fast Meter message
If the Monitor Is Equipped With Voltage Inputs	
564142000000	Analog channel name (VAB)
01	Analog channel type
FF	Scale factor type
0000	Scale factor offset in Fast Meter message
564243000000	Analog channel name (VBC)
01	Analog channel type
FF	Scale factor type
0000	Scale factor offset in Fast Meter message
564341000000	Analog channel name (VCA)
01	Analog channel type
FF	Scale factor type
0000	Scale factor offset in Fast Meter message
564700000000	Analog channel name (VG)
01	Analog channel type
FF	Scale factor type
0000	Scale factor offset in Fast Meter message
335632000000	Analog channel name (3V2)
01	Analog channel type
FF	Scale factor type
0000	Scale factor offset in Fast Meter message

Table D.4 A5C1 Fast Meter Configuration Block *(Sheet 4 of 5)*

Data	Description
6B5700000000	Analog channel name (kW)
FF	Scale factor type
0000	Scale factor offset in Fast Meter message
485000000000	Analog channel name (HP)
01	Analog channel type
FF	Scale factor type
0000	Scale factor offset in Fast Meter message
6B5641520000	Analog channel name (kVAR)
01	Analog channel type
FF	Scale factor type
0000	Scale factor offset in Fast Meter message
6B5641000000	Analog channel name (kVA)
01	Analog channel type
FF	Scale factor type
0000	Scale factor offset in Fast Meter message
706600000000	Analog channel name (pf)
01	Analog channel type
FF	Scale factor type
0000	Scale factor offset in Fast Meter message
If the Monitor Is Equipped With Internal or External RTD Inputs	
574447000000	Analog channel name (WDG) [Hottest Winding RTD Temp.]
00	Analog channel type
FF	Scale factor type
0000	Scale factor offset in Fast Meter message
425247000000	Analog channel name (BRG) [Hottest Bearing RTD Temp.]
00	Analog channel type
FF	Scale factor type
0000	Scale factor offset in Fast Meter message

Table D.4 A5C1 Fast Meter Configuration Block *(Sheet 5 of 5)*

Data	Description
414D42000000	Analog channel name (AMB) [Ambient RTD Temp.]
00	Analog channel type
FF	Scale factor type
0000	Scale factor offset in Fast Meter message
4F5448000000	Analog channel name (OTH) [Hottest Other RTD Temp.]
00	Analog channel type
FF	Scale factor type
0000	Scale factor offset in Fast Meter message
All Versions	
00	Reserved
checksum	1-byte checksum of all preceding bytes

A5D1 Fast Meter Data Block

In response to the A5D1 request, the SEL-701-1 Monitor sends the block shown in *Table D.5*.

Table D.5 A5D1 Fast Meter Data Block

Data	Description
A5D1	Command
xx	Length (specific value of xx based on monitor model, as shown below)
	72 bytes Base Monitor
	80 bytes Monitor with RTDs
	112 bytes Monitor with voltages
	120 bytes Monitor with RTDs, voltages
1-byte	1 Status Byte
##-bytes	Magnitudes in 4-byte IEEE floating point numbers (specific value of ## based on monitor model,as shown below)
	36 bytes Base Monitor
	76 bytes Monitor with voltages
##-bytes	Magnitudes in 2-byte integer (specific value f ## based on monitor model,as shown below)
	8 bytes Monitor with voltages
8-bytes	Time stamp
22-bytes	22 Digital banks: 20 Relay Word rows, plus 2 rows for targets
1-byte	Reserved
checksum	1-byte checksum of all preceding bytes

A5C2/A5C3 Demand/Peak Demand Fast Meter Configuration Messages

In response to the A5C2 or A5C3 request, the SEL-701-1 Monitor sends the block shown in *Table D.6*.

Table D.6 A5C2/A5C3 Demand/Peak Demand Fast Meter Configuration Messages *(Sheet 1 of 3)*

Data	Description
A5C2 or A5C3 Command; Demand (A5C2) or Peak Demand (A5C3)	
xx	Length in bytes (specific value of xx based on monitor model, as shown below)
	78 bytes Base Monitor
	118 bytes Monitor with voltages
01	# of status flag bytes
00	Scale factors in meter message
00	# of scale factors
xx	# of analog input channels (specific value of xxbased on monitor model, as shown below)
	6 Base Monitor
	10 Monitor with voltages
01	# of samples per channel
00	# of digital banks
00	# of calculation blocks
0004	Analog channel offset
xxxx	Time stamp offset (specific value of xxxx based on monitor model, as shown below)
	0034 Base Monitor
	0054 Monitor with voltages
FFFF	Digital offset
494100000000	Analog channel name (IA)
02	Analog channel type
FF	Scale factor type
0000	Scale factor offset in Fast Meter message

Table D.6 A5C2/A5C3 Demand/Peak Demand Fast Meter Configuration Messages *(Sheet 2 of 3)*

Data	Description
494200000000	Analog channel name (IB)
02	Analog channel type
FF	Scale factor type
0000	Scale factor offset in Fast Meter message
494300000000	Analog channel name (IC)
02	Analog channel type
FF	Scale factor type
0000	Scale factor offset in Fast Meter message
494E00000000	Analog channel name (IN)
02	Analog channel type
FF	Scale factor type
0000	Scale factor offset in Fast Meter message
494700000000	Analog channel name (IG)
02	Analog channel type
FF	Scale factor type
0000	Scale factor offset in Fast Meter message
334932000000	Analog channel name (3I2)
02	Analog channel type
FF	Scale factor type
0000	Scale factor offset in Fast Meter message
When Voltage Inputs Are Included	
50332B000000	Analog channel name (P3+)
02	Analog channel type
FF	Scale factor type
0000	Scale factor offset in Fast Meter message
51332B000000	Analog channel name (Q3+)
02	Analog channel type
FF	Scale factor type
0000	Scale factor offset in Fast Meter message
533300000000	Analog channel name (S3)
02	Analog channel type

Table D.6 A5C2/A5C3 Demand/Peak Demand Fast Meter Configuration Messages *(Sheet 3 of 3)*

Data	Description
FF	Scale factor type
0000	Scale factor offset in Fast Meter message
51332D000000	Analog channel name (Q3-)
02	Analog channel type
FF	Scale factor type
0000	Scale factor offset in Fast Meter message
All Versions	
00	Reserved
checksum	1-byte checksum of preceding bytes

A5D2/A5D3 Demand/Peak Demand Fast Meter Message

In response to the A5D2 or A5D3 request, the SEL-701-1 Monitor sends the block shown in *Table D.7*.

Table D.7 A5D2/A5D3 Demand/Peak Demand Fast Meter Message

Data	Description
A5D2 or A5D3 Command	
xx	Length (specific value of xx based on monitor model, as shown below) 62 bytes Base Monitor 94 bytes Monitor with voltages
1-byte	1 Status Byte
xx-bytes	Demand/Peak demand quantities in 8-byte IEEE Floating Point numbers (specific value of xx based on monitor model, as shown below) 48 bytes Base Monitor 80 bytes Monitor with voltages
8-bytes	Time stamp
1-byte	Reserved
1-byte	1-byte checksum of all preceding bytes

A5B9 Fast Meter Status Acknowledge Message

In response to the A5B9 request, the SEL-701-1 Monitor clears the Fast Meter (message A5D1) Status Byte. The SEL-701-1 Monitor Status Byte contains one active bit, STSET (bit 4). The bit is set on power up and on settings changes. If the STSET bit is set, the external device should request the A5C1, A5C2, and A5C3 messages. The external device can then determine if the scale factors or line configuration parameters have been modified.

A5CE Fast Operate Configuration Block

In response to the A5CE request, the monitor sends the block shown in *Table D.8*.

Table D.8 A5CE Fast Operate Configuration Block

Data	Description
A5CE	Command
18	Length
01	Support 1 circuit breaker or contactor
0004	Support 4 remote bit set/clear commands
0100	Allow remote bit pulse commands
31	Operate code, open breaker/contactor (STOP)
11	Operate code, close breaker/contactor (STR)
00	Operate code, clear remote bit RB1
20	Operate code, set remote bit RB1
40	Operate code, pulse remote bit RB1
01	Operate code, clear remote bit RB2
21	Operate code, set remote bit RB2
41	Operate code, pulse remote bit RB2
02	Operate code, clear remote bit RB3
22	Operate code, set remote bit RB3
42	Operate code, pulse remote bit RB3
03	Operate code, clear remote bit RB4
23	Operate code, set remote bit RB4
43	Operate code, pulse remote bit RB4
00	Reserved
checksum	1-byte checksum of all preceding bytes

The SEL-701-1 Monitor performs the specified remote bit operation if the following conditions are true:

- The Operate code is valid.
- The Operate validation = 4 • Operate code + 1.
- The message checksum is valid.
- The FASTOP port setting is set to Y.
- The monitor is enabled.

Remote bit set and clear operations are latched by the monitor. Remote bit pulse operations assert the remote bit for one processing interval (1/4 cycle).

It is common practice to route remote bits to output contacts to provide remote control of the monitor outputs. If you wish to pulse an output contact closed for a specific duration, SEL recommends using the remote bit pulse command and SELOGIC® control equations to provide secure and accurate contact control. The remote device sends the remote bit pulse command; the monitor controls the timing of the output contact assertion. You can use any remote bit and any SELOGIC control equation timer to control any of the output contacts.

A5E0 Fast Operate Remote Bit Control

Send the **A5E0** command to operate Remote Bits RB1–RB4. The **A5E0** command should contain the items listed in *Table D.9*.

Table D.9 A5E0 Command *(Sheet 1 of 2)*

Data	Description	
A5E0	Command	
06	Message length in bytes	
1-byte	Operate Code	
	00	Clear RB1
	01	Clear RB2
	02	Clear RB3
	03	Clear RB4
	20	Set RB1
	21	Set RB2
	22	Set RB3
	23	Set RB4
	40	Pulse RB1

Table D.9 A5E0 Command *(Sheet 2 of 2)*

Data	Description
	41 Pulse RB2
	42 Pulse RB3
	43 Pulse RB4
1-byte	Command validation (4 • Operate Code) + 1
1-byte	1-byte checksum of all preceding bytes

A5E3 Fast Operate Breaker/Contactor Control

Send the **A5E3** command to stop or start the protected motor. Motor starting is only effective if a monitor output contact is properly connected to close the motor contactor or breaker.

The **A5E3** command should contain the items listed in *Table D.10*.

Table D.10 A5E3 Command

Data	Description
A5E3	Command
06	Message length in bytes
1-byte	Operate Code
	31 Stop Motor
	11 Start Motor
1-byte	Command validation (4 • Operate Code) + 1
1-byte	1-byte checksum of all preceding bytes

ID Message

In response to the **ID** command, the SEL-701-1 Monitor sends the firmware ID, boot code ID, monitor RID setting, the Modbus device code, part number, and configuration as described below.

```
<STX>"FID STRING ENCLOSED IN QUOTES","yyyy"<CR>
"BOOT CODE ID STRING ENCLOSED IN QUOTES","yyyy"<CR>
"RID SETTING ENCLOSED IN QUOTES","yyyy"<CR>
“DEVICE CODE ENCLOED IN QUOTES”, "yyyy"<CR>
"MONITOR PART NUMBER ENCLOSED IN QUOTES","yyyy"<CR>
"MONITOR CONFIGURATION NUMBER ENCLOSED IN QUOTES","yyyy"<CR>
<ETX>
```

where:

- <STX> is the STX character (02).
- <ETX> is the ETX character (03).
- "yyyy" is the 4-byte ASCII hex representation of the checksum for each line.

The ID message is available from Access Level 1 and higher.

DNA Message

In response to the Access Level 1 **DNA** command, the monitor sends names of the Relay Word bits transmitted in the A5D1 message. The first name is associated with the MSB and the last name with the LSB. The SEL-701-1 Monitor DNA message is:

```
<STX>
"STARTING","RUNNING","STOPPED","JAMTRIP","LOSSALRM","LOSSTRIP","46UBA","46UBT","13C7"
"49A","49T","THERMLO","NOSLO","TBSLO","ABSLO","*","*","0BDE"
"50P1T","50P2T","50N1T","50N2T","50QT","50S","50G1T","50G2T","0C8B"
"47T","TRGTR","START","52A","SPDSTR","SPEEDSW","RTDBIAS","RTDFLT","0FDC"
"WDGALRM","WDGTRIP","BRGALRM","BRGTRIP","AMBALRM","AMBTRIP","OTHALRM","OTHTRIP","141C"
"27P1","27P2","59P1","59P2","59G","81D1T","81D2T","81D3T","0B82"
"37PA","37PT","55A","55T","VARA","VART","*","*","09AD"
"LT1","LT2","LT3","LT4","RB1","RB2","RB3","RB4","09E4"
"SV1","SV2","SV3","SV4","SV1T","SV2T","SV3T","SV4T","0BAC"
"IN1","IN2","IN3","IN4","IN5","IN6","IN7","*","0937"
"TRIP","OUT1","OUT2","OUT3","ALARM","*","*","*","0A28"
"*","LED1","LED2","LED3","LED4","LED5","LED6","LED7","0AE9"
"RTD1A1","RTD2A1","RTD3A1","RTD4A1","RTD5A1","RTD6A1","RTD7A1","RTD8A1","1004"
"RTD9A1","RTD10A1","RTD11A1","RTD12A1","*","*","*","*","0AF7"
"RTD1A2","RTD2A2","RTD3A2","RTD4A2","RTD5A2","RTD6A2","RTD7A2","RTD8A2","100C"
"RTD9A2","RTD10A2","RTD11A2","RTD12A2","*","*","*","*","0AFB"
"RTD1A3","RTD2A3","RTD3A3","RTD4A3","RTD5A3","RTD6A3","RTD7A3","RTD8A3","1014"
"RTD9A3","RTD10A3","RTD11A3","RTD12A3","*","*","*","*","0AFF"
"RTD1T","RTD2T","RTD3T","RTD4T","RTD5T","RTD6T","RTD7T","RTD8T","0F14"
"RTD9T","RTD10T","RTD11T","RTD12T","*","*","*","*","0A7F"
"*","MOTSTART","THERM_AL","*","UNBAL_AL","LOSS_AL","VOLT_AL","*","0FA4"
"ENABLE","MOTRUN","THERM_OL","OVERCURR","UNBAL","LOADLOSS","VOLTAGE","FREQ","1311"
<ETX>
```

where:

- <STX> is the STX character (02).
- <ETX> is the ETX character (03).
- the last field in each line is the 4-byte ASCII hex representation of the checksum for the line.
- "*" indicates an unused bit location.

BNA Message

In response to the **BNA** command, the monitor sends names of the bits transmitted in the Status Byte in the A5D1 message. The first name is the MSB and the last name is the LSB. The BNA message is:

```
<STX>"*","*","*","STSET","*","*","*","*","yyyy"
<ETX>
```

where:

- "yyyy" is the 4-byte ASCII representation of the checksum.
- "*" indicates an unused bit location.

The **BNA** command is available from Access Level 1 and higher.

Compressed ASCII Commands

The SEL-701-1 Monitor provides compressed ASCII versions of some of the monitor ASCII commands. The compressed ASCII commands allow an external device to obtain data from the monitor in a format that directly imports into spreadsheet or database programs and can be validated with a checksum.

The SEL-701-1 Monitor provides the compressed ASCII commands shown in *Table D.11*.

Table D.11 Compressed ASCII Commands

Command	Description
CASCII	Configuration message
CSTATUS	Status message
CHISTORY	History message
CEVENT	Event message
CME E	Energy meter values
CME T	Thermal meter values
CME M	Max/Min meter values

CASCII Command

General Format

The compressed ASCII configuration message provides data for an external computer to extract data from other compressed ASCII commands. To obtain the configuration message for the compressed ASCII commands available in an SEL monitor, type:

CAS <CR>

The SEL-701-1 Monitor sends:

```
<STX>"CAS",n,"yyyy"<CR>
"COMMAND 1",Ll,"yyyy"<CR>
"#H","xxxxx","xxxxx",.......,"xxxxx","yyyy"<CR>
"#D","ddd","ddd","ddd","ddd",.......,"ddd","yyyy"<CR>
"COMMAND 2",Ll,"yyyy"<CR>
"#H","ddd","ddd",.......,"ddd","yyyy"<CR>
"#D","ddd","ddd","ddd","ddd",.......,"ddd","yyyy"<CR>
.
.
.
"COMMAND n",Ll,"yyyy"<CR>
"#H","xxxxx","xxxxx",.......,"xxxxx","yyyy"<CR>
"#D","ddd","ddd","ddd","ddd",.......,"ddd","yyyy"<CR>
<ETX>
```

where:

- "n" is the number of compressed ASCII command descriptions to follow.
- "COMMAND" is the ASCII name for the compressed ASCII command as sent by the requesting device. The naming convention for the compressed ASCII commands is a 'C' preceding the typical command. For example, **CSTATUS** (abbreviated to **CST**) is the compressed **STATUS** command.
- "Ll" is the minimum access level at which the command is available.
- "#H" identifies a header line to precede one or more data lines; "#" is the number of subsequent ASCII names. For example, “21H” identifies a header line with 21 ASCII labels.
- "xxxxx" is an ASCII name for corresponding data on following data lines. Maximum ASCII name width is 10 characters.
- "#D" identifies a data format line; "#" is the maximum number of subsequent data lines.
- "ddd" identifies a format field containing one of the following type designators:
- "I" Integer data
- "F" Floating point data

- "mS" String of maximum m characters (e.g., 10S for a 10 character string)
- "yyyy" is the 4-byte hex ASCII representation of the checksum

A compressed ASCII command may require multiple header and data configuration lines.

If a compressed ASCII request is made for data that are not available (e.g., the history buffer is empty or invalid event request), the monitor responds with the following message:

```
<STX>"No Data Available","0668"<CR>
<ETX>
```

SEL-701-1 Monitor Command Response Contents

Display the SEL-701-1 Monitor compressed ASCII configuration message by typing:

CAS <CR>

The monitor replaces the items in *italics* with the actual monitor data.

The SEL-701-1 Monitor sends:

```
<STX>
"CAS",6,"yyyy"<CR>
"CST",1,"yyyy"<CR>
"1H","FID","yyyy"<CR>
"1D","45S","yyyy"<CR>
"7H","MONTH","DAY","YEAR","HOUR","MIN","SEC","MSEC,"yyyy"<CR>
"1D","I","I","I","I","I","I","I","yyyy",<CR>
"22H","IA","IB","IC","IN","VA","VB","VC","N","+5V_PS","-
5V_PS","+15V_PS","+28V_PS","TEMP","RAM","ROM","CR_RAM","EEPROM","BATTERY","RTC","LC_TIME","TC_STAR
T","MONITOR"yyyy"<CR>
"1D","12S","12S","12S","12S","12S","12S","12S","12S","12S","12S","12S","12S","12S","12S","12S","12
S","12S","12S","12S","12S","12S","12S","yyyy"<CR>
"CHI",1,"yyyy"<CR>
"1H","FID","yyyy"<CR>
"1D","45S","yyyy"<CR> where n is defined below
"30H","REC_NUM","MONTH","DAY","YEAR","HOUR","MIN","SEC","MSEC","TYPE","FREQ","THM
CAP(%)","UB_CURR(%)","IA","IB","IC","IN","IG","3I2","WDG(C)","BRG(C)","AMB(C)","OTH(C)","VAB","VBC
","VCA","kW","kVAR","kVA","PF","LD/LG","yyyy"<CR>
"14D","I","I","I","I","I","I","I","I","25S","F","F","F","F","F","F","F","F","F","10S","10S","10S",
"10S","F","F","F","F","F","F","F","5S","yyyy"<CR>
"CEV",1,"yyyy"<CR>
"1H","FID","yyyy"<CR>
"1D","45S","yyyy"<CR>
"7H","MONTH","DAY","YEAR","HOUR","MIN","SEC","MSEC,"yyyy"<CR>
"1D","I","I","I","I","I","I","I","yyyy"<CR>
"25H","FREQ","SAM/CYC_A","SAM/CYC_D","NUM_OF_CYC","TYPE","IA","IB","IC","IN","IG","3I2","UB_CURR(%
)","THM
CAP(%)","VAB","VBC","VCA","kW","kVAR","kVA","PF","LEAD/LAG","WINDING(C)","BEARING(C)","AMBIENT(C)"
,"OTHER(C)","yyyy"<CR>
"1D","F","I","I","I","25S","F","F","F","F","F","F","F","F","F","F","F","F","F","F","F","5S","10S",
"10S","10S","10S","yyyy"<CR>
"10H","IA","IB","IC","IG","IN","VAB","VBC","VCA","TRIG ","Names of elements in the Relay Word
separated by spaces","yyyy"<CR>
"60D","F","F","F","F","F","F","F","F","2S","24S","yyyy"<CR>
```

```
"CME E",1,"yyyy"<CR>
"1H","FID","yyyy"<CR>
"1D","45S","yyyy"<CR>
"7H","MONTH","DAY","YEAR","HOUR","MIN","SEC","MSEC,"yyyy"<CR>
"1D","I","I","I","I","I","I","I","yyyy",<CR>
"4H","MWhr","MVARhr-IN","MVARhr-OUT","MVAhr","yyyy"<CR>
"1D","F","F","F","F","yyyy"<CR>
"1H","LAST RESET","yyyy"<CR>
"1D","23S","yyyy"<CR>
"CME M",1,"yyyy"<CR>
"1H","FID","yyyy"<CR>
"1D","45S","yyyy"<CR>
"7H","MONTH","DAY","YEAR","HOUR","MIN","SEC","MSEC,"yyyy"<CR>
"1D","I","I","I","I","I","I","I","yyyy"<CR>
"7H","CHANNEL","MAX","DATE","TIME","MIN","DATE","TIME","yyyy"<CR>
"24D","12S","10S","10S","12S","10S","10S","12S","yyyy"<CR>
"1H","LAST RESET","yyyy"<CR>
"1D","23S","yyyy"<CR>
"CME T",1,"yyyy"<CR>
"1H","FID","yyyy"<CR>
"1D","45S","yyyy"<CR>
"7H","MONTH","DAY","YEAR","HOUR","MIN","SEC","MSEC,"yyyy"<CR>
"1D","I","I","I","I","I","I","I","yyyy"<CR>
"18H","1 BRG (C)","2 BRG (C)","3 BRG (C)","4 BRG (C)","5 BRG (C)","6 BRG (C)","7 WDG (C)","8 WDG
(C)","9 WDG (C)","10 WDG (C)","11 AMB (C)","12 OTH
(C)","FLA(%)","THM CAP(%)","RTD TC(%)","CALC TIME","MINUTES","STARTS","yyyy"<CR>
"1D","10S","10S","10S","10S","10S","10S","10S","10S","10S","10S","10S","10S","F","F","F","I","I","
I","yyyy"<CR>
<ETX>
```

See the *DNA Message on page D.16* for definition of the “Names of elements in the Relay Word separated by spaces” field.

In all instances, if the monitor does not support voltage measurement, the voltage and power labels are replaced with “*”. The CME E report is not included if voltage inputs are not supported.

If the monitor is not equipped with internal or external RTD inputs, the RTD labels are replaced with “*”. If the monitor is equipped with RTD inputs, the RTD locations (BRG, WDG, etc.) are setting dependent. If Fahrenheit is the designated temperature scale, the temperature designator (C) is replaced with (F)

where:

- "THM CAP(%)" is the thermal model thermal capacity used in percent.
- "RTD TC(%)" is the RTD estimated thermal capacity used in percent.
- "CALC TIME" is the calculated time to thermal trip in seconds.
- "MINUTES" is the number of minutes since the last motor start.
- "STARTS" is the number of motor starts in the past hour.

CSTATUS Command

Display status data in compressed ASCII format by typing:

CST <CR>

The monitor replaces the items in ***italics*** with the actual monitor data.

The SEL-701-1 Monitor sends:

```
<STX>"FID","yyyy"<CR>
"Monitor FID string","yyyy"<CR>
"MONTH","DAY","YEAR","HOUR","MIN","SEC","MSEC","yyyy"<CR>
xxxx,xxxx,xxxx,xxxx,xxxx,xxxx,xxxx,"yyyy"<CR>
"IA","IB","IC","IN","VA","VB","VC","N","+5V_PS","-
5V_PS","+15V_PS","+28V_PS","TEMP","RAM","ROM","CR_RAM","EEPROM","BATTERY","RTC","LC_TIME","TC_STAR
T","MONITOR","yyyy"<CR>
"xxxx","xxxx","xxxx","xxxx","xxxx","xxxx","xxxx",
"xxxx","xxxx","xxxx","xxxx","xxxx","xxxx","xxxx","xxxx","xxxx","xxxx",
"xxxx","xxxx","xxxx","xxxx","zzzz","yyyy"<CR>
<ETX>
```

where:

- "xxxx" are the data values corresponding to the first line labels.
- "zzzz" is a message saying whether the monitor is “ENABLED” or “DISABLED.”
- "yyyy" is the 4-byte hex ASCII representation of the checksum.

In monitors where voltages are not supported, “VA”, “VB”,”VC”, and “N” are reported as “*”.

CHISTORY Command

Display history data in compressed ASCII format by typing:

CHI <CR>

The monitor replaces the items in ***italics*** with the actual monitor data.

The SEL-701-1 Monitor sends:

```
<STX>"FID","yyyy"<CR>
"Monitor FID string","yyyy"<CR>
"REC_NUM","MONTH","DAY","YEAR","HOUR","MIN","SEC","MSEC","TYPE","FREQ","THM
CAP(%)","UB_CURR(%)","IA","IB","IC","IN","IG","3I2","WDG (C)","BRG (C)","AMB (C)","OTH
(C)","VAB","VBC","VCA","kW","kVAR","kVA","PF","LD/LG","yyyy"<CR>
xxxx,xxxx,xxxx,xxxx,xxxx,xxxx,xxxx,xxxx,xxxx,"xxxx",xxxx,xxxx,xxxx,xxxx,xxxx,xxxx,xxxx,
xxxx,xxxx,"xxxx","xxxx","xxxx","xxxx",xxxx,xxxx,xxxx,xxxx,xxxx,xxxx,xxxx,"xxxx",
"yyyy"<CR>
<ETX>
```

(the second line is then repeated for each record)

where:

- "xxxx" are the data values corresponding to the first line labels.
- "yyyy" is the 4-byte hex ASCII representation of the checksum.
- "THM CAP(%)" is the thermal model thermal capacity used in percent.

If the history buffer is empty, the monitor responds:

```
<STX>"No Data Available","0668"<CR>
<ETX>
```

If the monitor does not support voltage measurement, the voltage and power labels are replaced with “*”.

If the monitor is not equipped with internal or external RTD inputs, the RTD labels are replaced with: “*”. If Fahrenheit is the designated temperature scale, the temperature designator (C) is replaced with (F).

CEVENT Command

Display event report in compressed ASCII format by sending:

CEV n

where:

- n event number (1–n), defaults to 1.

The monitor responds to the **CEV** command with the **nth** event report as shown below. The monitor replaces the items in ***italics*** with the actual monitor data.

The SEL-701-1 Monitor sends:

```
<STX>"FID","yyyy"<CR>
"Monitor FID string","yyyy"<CR>
"MONTH","DAY","YEAR","HOUR","MIN","SEC","MSEC","yyyy"<CR>
xxxx,xxxx,xxxx,xxxx,xxxx,xxxx,xxxx,"yyyy"<CR>
"FREQ","SAM/CYC_A","SAM/CYC_D","NUM_OF_CYC","TYPE","IA","IB","IC","IN","IG","3I2","UB_CURR(%)","TH
M CAP(%)","VAB","VBC","VCA","kW","kVAR","kVA","PF","LEAD/LAG","WINDING (C)","BEARING (C)","AMBIENT
(C)","OTHER (C)","yyyy"<CR>
xxxx,xxxx,xxxx,xxxx,"xxxx",xxxx,xxxx,xxxx,xxxx,xxxx,xxxx,xxxx,xxxx,xxxx,xxxx,xxxx,xxxx,xxxx,x
xxx,"xxxx","xxxx","xxxx","xxxx","xxxx","yyyy"<CR>
"IA","IB","IC","IG","IN","VAB","VBC","VCA","TRIG ","Names of elements in the Relay Word separated
by spaces","yyyy"<CR>
xxxx,xxxx,xxxx,xxxx,xxxx,xxxx,xxxx,xxxx,z,"HEX-ASCII Relay Word","yyyy"<CR>
"SETTINGS","yyyy"<CR>
"Monitor settings as displayed with the showset command (surrounded by quotes)","yyyy"<CR>
<ETX>
```

where:

- "xxxx" are the data values corresponding to the line labels.
- "yyyy" is the 4-byte hex ASCII representation of the checksum.
- "FREQ" is the power system frequency at the trigger instant.
- "SAM/CYC_A" is the number of analog data samples per cycle (4 or 16).
- "SAM/CYC_D" is the number of digital data samples per cycle (4 or 16).
- "NUM_OF_CYC" is the number of cycles of data in the event report.
- "TYPE" is the event type.
- "TRIG" refers to the trigger record.
- "IA", "IB", "IC", "IN", "IG", "3I2" are the summary currents.
- "VAB", "VBC", and "VCA" are replaced by “VA”, “VB”, and “VC” in the event body when phase-neutral potentials are applied. They are replaced by “*” when voltages are not included.
- "TRIG" refers to the trigger record.

- "z" is “>” for the trigger row, “*” for the fault current row and empty for all others. If the trigger row and fault current row are the same, both characters are included (e.g., “>*”).
- "HEX-ASCII Relay Word" is the hex ASCII format of the Relay Word. The first element in the Relay Word is the most significant bit in the first character.

If the specified event does not exist, the monitor responds:

```
<STX>"No Data Available","0668"<CR>
<ETX>
```

See the *DNA Message on page D.16* for definition of the “Names of elements in the Relay Word separated by spaces” field.

A typical ***HEX-ASCII Relay Word*** is shown below:

```
"20000010000000000000080","0CA0"
```

Each byte in the ***HEX-ASCII Relay Word*** reflects the status of 8 Relay Word bits. The order of the labels in the “***Names of elements in the Relay Word separated by spaces”*** field matches the order of the ***HEX-ASCII Relay Word***. In the example above, the first two bytes in the ***HEX-ASCII Relay Word*** are “20”. In binary, this evaluates to 00100000. Mapping the labels to the bits yields:

Labels	STARTING	RUNNING	STOPPED	JAMTRIP	LOSSALRM	LOSSTRIP	46VBA	46BVT
Bits	0	0	1	0	0	0	0	0

In this example, the STOPPED Relay Word bit is asserted (logical 1); all others are deasserted (logical 0).

CME E Command

Display energy meter data in compressed ASCII format by typing:

CME E <CR>

The monitor replaces items in ***italics*** with the actual monitor data.

The SEL-701-1 Monitor sends:

```
<STX>"FID","yyyy"<CR>
"Monitor FID string","yyyy"<CR>
"MONTH","DAY","YEAR","HOUR","MIN","SEC","MSEC","yyyy"<CR>
xxxx,xxxx,xxxx,xxxx,xxxx,xxxx,xxxx,"yyyy"<CR>
"MWhr","MVARhr-IN","MVARhr-OUT","MVAhr","yyyy"<CR>
xxxx,xxxx,xxxx,xxxx,"yyyy"<CR>
"LAST RESET","yyyy"<CR>
"xxxx","yyyy"<CR>
<ETX>
```

If the voltage option is not supported, the monitor responds:

```
<STX>"No Data Available","0668"<CR>
<ETX>
```

CME M Command

Display Max/Min meter data in compressed ASCII format by typing:

CME M <CR>

The monitor replaces the items in ***italics*** with the actual monitor data.

The SEL-701-1 Monitor sends:

```
<STX>"FID","yyyy"<CR>
"Monitor FID string","yyyy"<CR>
"MONTH","DAY","YEAR","HOUR","MIN","SEC","MSEC","yyyy"<CR>
xxxx,xxxx,xxxx,xxxx,xxxx,xxxx,xxxx,"yyyy"<CR>
"CHANNEL","MAX","DATE","TIME","MIN","DATE","TIME","yyyy"<CR>
"IA(A)","xxxx","xxxx","xxxx","xxxx","xxxx","xxxx","yyyy"<CR>
"IB(A)","xxxx","xxxx","xxxx","xxxx","xxxx","xxxx","yyyy"<CR>
"IC(A)","xxxx","xxxx","xxxx","xxxx","xxxx","xxxx","yyyy"<CR>
"IN(A)","xxxx","xxxx","xxxx","xxxx","xxxx","xxxx","yyyy"<CR>
"IG(A)","xxxx","xxxx","xxxx","xxxx","xxxx","xxxx","yyyy"<CR>
"VAB(V)","xxxx","xxxx","xxxx","xxxx","xxxx","xxxx","yyyy"<CR>
"VBC(V)","xxxx","xxxx","xxxx","xxxx","xxxx","xxxx","yyyy"<CR>
"VCA(V)","xxxx","xxxx","xxxx","xxxx","xxxx","xxxx","yyyy"<CR>
"VG(V)","xxxx","xxxx","xxxx","xxxx","xxxx","xxxx","yyyy"<CR>
"kW3P","xxxx","xxxx","xxxx","xxxx","xxxx","xxxx","yyyy"<CR>
"kVAR3P","xxxx","xxxx","xxxx","xxxx","xxxx","xxxx","yyyy"<CR>
"kVA3P","xxxx","xxxx","xxxx","xxxx","xxxx","xxxx","yyyy"<CR>
" 1 BRG (C)","xxxx","xxxx","xxxx","xxxx","xxxx","xxxx","yyyy"<CR>
" 2 BRG (C)","xxxx","xxxx","xxxx","xxxx","xxxx","xxxx","yyyy"<CR>
" 3 BRG (C)","xxxx","xxxx","xxxx","xxxx","xxxx","xxxx","yyyy"<CR>
" 4 BRG (C)","xxxx","xxxx","xxxx","xxxx","xxxx","xxxx","yyyy"<CR>
" 5 BRG (C)","xxxx","xxxx","xxxx","xxxx","xxxx","xxxx","yyyy"<CR>
" 6 BRG (C)","xxxx","xxxx","xxxx","xxxx","xxxx","xxxx","yyyy"<CR>
" 7 WDG (C)","xxxx","xxxx","xxxx","xxxx","xxxx","xxxx","yyyy"<CR>
" 8 WDG (C)","xxxx","xxxx","xxxx","xxxx","xxxx","xxxx","yyyy"<CR>
" 9 WDG (C)","xxxx","xxxx","xxxx","xxxx","xxxx","xxxx","yyyy"<CR>
"10 WDG (C)","xxxx","xxxx","xxxx","xxxx","xxxx","xxxx","yyyy"<CR>
"11 AMB (C)","xxxx","xxxx","xxxx","xxxx","xxxx","xxxx","yyyy"<CR>
"12 OTH (C)","xxxx","xxxx","xxxx","xxxx","xxxx","xxxx","yyyy"<CR>
"LAST RESET","yyyy"<CR>
"xxxx","yyyy"<CR>
<ETX>
```

Voltage and power labels are replaced with “*” if the optional voltage inputs are not included. RTD labels are replaced with “*” if RTDs are not supported or enabled. RTD locations and temperature designators are setting dependent.

CME T Command

Display thermal meter data in compressed ASCII format by typing:

CME T <CR>

The monitor replaces the items in ***italics*** with the actual monitor data.

The SEL-701-1 Monitor sends:

```
<STX>"FID","yyyy"<CR>
"Monitor FID string","yyyy"<CR>
"MONTH","DAY","YEAR","HOUR","MIN","SEC","MSEC","yyyy"<CR>
xxxx,xxxx,xxxx,xxxx,xxxx,xxxx,xxxx,"yyyy"<CR>
"1 BRG (C)","2 BRG (C)","3 BRG (C)","4 BRG (C)","5 BRG (C)","6 BRG (C)","7 WDG (C)","8 WDG (C)","9
WDG (C)","10 WDG (C)","11 AMB (C)","12 OTH (C)","FLA(%)","THM CAP(%)","RTD TC(%)","CALC
TIME","MINUTES","STARTS","yyyy"<CR>
"xxxx","xxxx","xxxx","xxxx","xxxx","xxxx","xxxx","xxxx","xxxx","xxxx","xxxx","xxxx",
xxxx,xxxx,xxxx,xxxx,xxxx,xxxx,"yyyy"<CR>
<ETX>
```

where:

- "THM CAP(%)" is the thermal model thermal capacity used in percent.
- "RTD TC(%)" is the RTD estimated thermal capacity used in percent.
- "CALC TIME" is the calculated time to thermal trip in seconds.
- "MINUTES" is the number of minutes since the last motor start.
- "STARTS" is the number of motor starts in the past hour.

RTD labels are replaced with “*” if RTDs are not supported or enabled. RTD locations and temperature designators are setting dependent. RTD thermal capacity is reported as 0 if RTDs are not supported or enabled.

Appendix E
Motor Thermal Element

Introduction

The SEL-701-1 Monitor provides effective motor thermal protection using a patented protection algorithm. The monitor offers three convenient methods to set the thermal element. They are:

- Motor ratings method.
- Generic thermal limit curve method.
- User thermal limit curve method.

These setting methods are described in detail in *Section 3: Settings Calculation*. The three methods accommodate differences in protected motors and in the amount and type of motor information available. They also offer the majority of monitor users at least one familiar setting method.

While the implementation details of each setting method vary, the fundamental thermal element is the same for all three, so this generalized discussion applies to all three methods equally. Regardless of the setting method used, the thermal element provides motor protection for the following potentially damaging conditions:

- Locked Rotor Starts.
- Running Overload.
- Operation Under Unbalanced Currents.
- Too Frequent or Prolonged Starting.

In order to provide integrated protection for all these conditions, the thermal element:

- Continuously maintains a numeric estimate analogous to the heat energy in the motor.
- Adjusts the heat estimate based on the measured positive-sequence and negative-sequence current flowing in the motor.
- Weights the heating effect of negative-sequence current as five times the heating effect of positive-sequence current when the motor is running.

- Weights the heating effects of positive- and negative-sequence current equally when the motor is starting.
- Models the heat lost to the surroundings when the motor is running.
- Compares the present heat estimate to a starting trip threshold or a running trip threshold, depending on the state of the motor.
- Provides a trip output if the present heat estimate exceeds the present trip threshold.
- Provides an alarm output if the present heat estimate exceeds the present alarm threshold (user settable as a percentage of the trip threshold).
- Adjusts the present trip threshold based on RTD ambient temperature measurement when enabled.

Purpose of Motor Thermal Protection

A typical induction motor draws six times its rated full load current when starting. This high stator current induces a comparably high current in the rotor. The rotor resistance at zero speed typically is three times the rotor resistance when the motor is at rated speed. Thus, the I^2r heating in the rotor is approximately $6^2 \bullet 3$ or 108 times the I^2r heating when the motor is running normally. Consequently, the motor must tolerate an extreme temperature for a limited time in order to start. Manufacturers communicate the motor tolerance through the maximum locked rotor time and locked rotor amps specifications for each motor. In a similar manner, the motor manufacturer communicates the motor's ability to operate under continuous heavy load through the service factor specification.

The purpose of motor thermal protection is to allow the motor to start and run within the manufacturer's published guidelines, but trip if the motor heat energy exceeds those ratings due to overloads, negative-sequence current, or locked rotor starting.

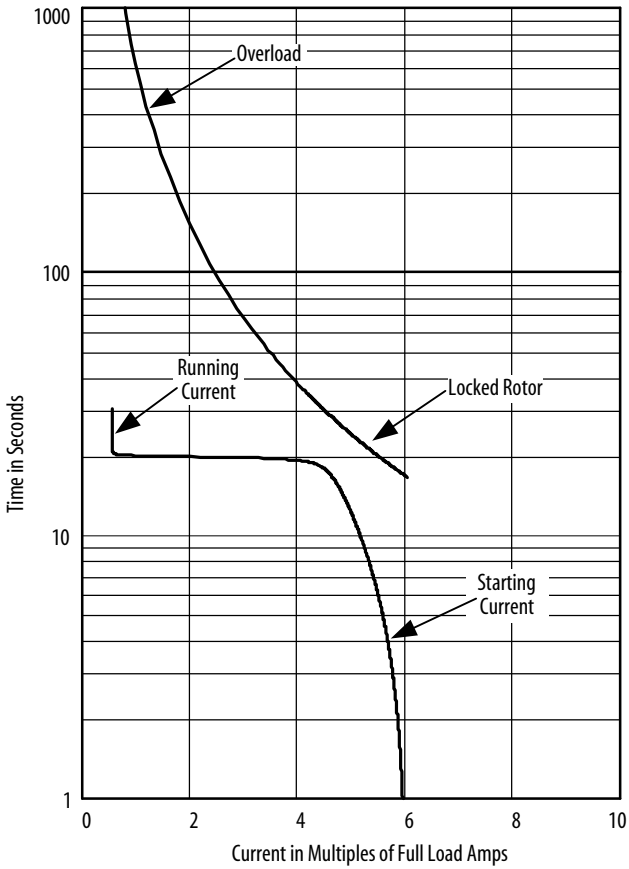

Figure E.1 Motor Thermal Limit Characteristic Plotted With Motor Starting Current.

Figure E.1 shows a typical motor thermal limit characteristic plotted with the motor starting current. Some motor protection applications use an inverse-time phase overcurrent element to provide locked rotor and overload protection along with a separate negative-sequence overcurrent monitor to prevent overheating due to current unbalance. Unfortunately, neither of these elements accounts for the motor thermal history or track temperature excursions. The SEL-701-1 Monitor thermal element, with its integrated design, offers distinct advantages over the use of discrete elements.

The SEL-701-1 Monitor thermal element always operates in one of two modes: starting or running. In starting mode, the thermal element provides locked rotor protection, allowing the motor to absorb the high energy of the I^2t threshold represented by the rated locked rotor current and time. In running mode, the thermal element provides overload and unbalance protection by limiting the motor heat energy estimate to a value represented by the service factor and two other motor parameters.

The Basic Thermal Element

Figure E.2 shows a simple electrical analog for a thermal system. The thermal element includes:

- A heat source, modeled as a current source.
- A thermal capacitance, modeled as a capacitor.
- A thermal impedance to ambient, modeled as a resistor.
- A comparator, to compare the present heat estimate, U, to the Thermal Trip Value.

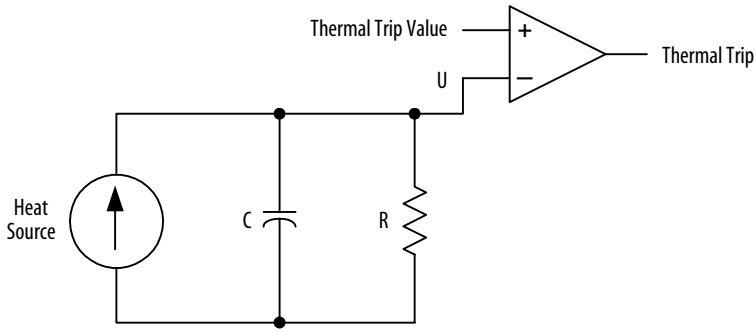

Figure E.2 Electrical Analog of a Thermal System.

In order to define a thermal element for an induction motor, the characteristics of each component in *Figure E.2* must be defined, starting with the heat source. In an induction motor, heat principally is caused by I^2r losses. To consider the effects of negative-sequence current on the motor, it is called out separately in *Equation* .

$$\text{Heat Source} = I_1^{\,2} \bullet K_1 + I_2^{\,2} \bullet K_2$$

Equation E.1

Heating factors K_1 and K_2 are defined by the positive-sequence rotor resistance and negative-sequence rotor resistance, respectively.

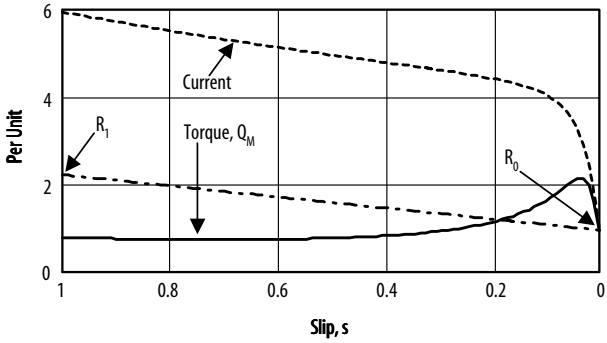

Figure E.3 Typical Induction Motor Current, Torque, and Rotor Resistance versus Slip.

Figure E.3 shows a plot of a typical induction motor current, torque, and rotor resistance versus slip. When motor slip is 1 per unit, rotor speed is zero. As the motor approaches rated speed, slip decreases to near zero.

Calculate the positive-sequence rotor resistance plotted in *Figure E.3* using *Equation E.2*.

$$R_r = \left(\frac{Q_M}{I^2}\right) \bullet S$$

Equation E.2

Where:

S = Motor slip
Q_m = Motor torque at slip S
I = Motor positive-sequence current at slip S

The positive-sequence rotor resistance is represented as a linear function of slip S by *Equation E.3*.

$$R_{r+} = (R_1 - R_0) \bullet S + R_0$$

Equation E.3

Where:

R_1 = Positive-sequence rotor resistance at slip S = 1
R_0 = Positive-sequence rotor resistance at slip S = 0

To properly account for the heating effects of the negative-sequence current, calculate the negative-sequence rotor resistance. The rotor has slip with respect to the stator negative-sequence current. To determine the value of the negative-sequence slip as a function of positive-sequence slip, S, observe that negative-sequence stator currents cause counter-rotating magnetic poles on the inside face of the stator. When rotor speed is zero, the counter-rotating poles induce fundamental frequency currents in the rotor: negative-sequence slip equals positive-sequence slip, S. When the rotor is spinning at near synchronous speed, the counter-rotating magnetic poles induce

approximately double-frequency currents in the rotor: negative-sequence slip equals twice the fundamental frequency.

Based on these observations, negative-sequence slip equals (2–S). Substituting this value for S in *Equation E.3*, calculate negative-sequence rotor resistance, R_{r-}.

$$R_{r-} = (R_1 - R_0) \bullet (2 - S) + R_0$$

Equation E.4

Where:

R_1 = Positive-sequence rotor resistance at slip S = 1
R_0 = Positive-sequence rotor resistance at slip S = 0

To obtain factors expressing the relative heating effect of positive- and negative-sequence current, divide *Equation E.3* and *Equation E.4* by R_0. For the locked rotor case (slip, S = 1).

$$\left.\frac{R_{r+}}{R_0}\right|_{S=1} = \left.\frac{R_{r-}}{R_0}\right|_{S=1} = \frac{R_1}{R_0} = 3$$

Equation E.5

When the motor is running (S ≈ 0), the positive-sequence heating factor, K_1, is found.

$$\left.\frac{R_{r+}}{R_0}\right|_{S=0} = \frac{R_0}{R_0} = 1$$

Equation E.6

The negative-sequence heating factor, K_2, at S ≈ 0 is found.

$$\left.\frac{R_{r-}}{R_0}\right|_{S=0} = 2 \bullet \left(\frac{R_1}{R_0}\right) - 1 = 5$$

Equation E.7

To summarize, based on the assumption that the locked-rotor rotor resistance is three times the running rotor resistance:

- The heating factor of positive-sequence current, K_1, when the motor is running is 1 per unit.
- The heating factor of negative-sequence current, K_2, when the motor is running is 5 per unit.
- Both K_1 and K_2 are 3 per unit when the rotor is locked.

The differences in the positive- and negative-sequence heating factors immediately suggest that the thermal element should have two states representing the starting and running states of the motor. The SEL-701-1 Monitor thermal element automatically selects which state to use based on the measured positive-sequence current. When the positive-sequence current is greater than 2.5 times the motor rated full load current setting, the monitor uses the starting state. When current is less than 2.5 times rated full load current, the monitor uses the running state.

Motor Starting Protection

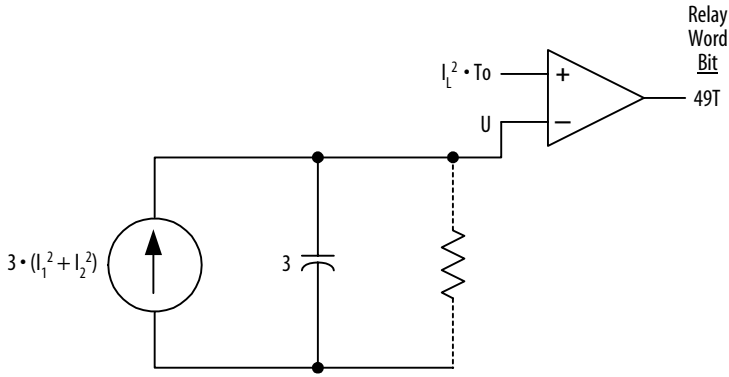

Figure E.4 Motor Starting Thermal Element.

Figure E.4 shows the thermal element used when the motor is starting. Locked rotor heating occurs over just a few seconds, so the model assumes that no heat is lost to the surroundings and the resistor is removed from the thermal circuit. The thermal trip value is defined by the motor rated locked rotor current, I_L, squared, times the rated hot motor locked rotor time, To. The thermal capacitance is selected to match the heat source heating factor, 3. By setting the capacitance equal to 3, when the motor positive-sequence current, I_1, equals locked rotor current, I_L, the heat estimate, U, reaches the trip value in exactly locked rotor time, To.

When a successful motor start occurs and positive-sequence current drops below 2.5 times full load current, the monitor switches from the starting thermal element to the running thermal element. The present heat estimate, U, is transferred directly to the running element, representing the heat build-up that occurred during motor starting.

Motor Running Protection

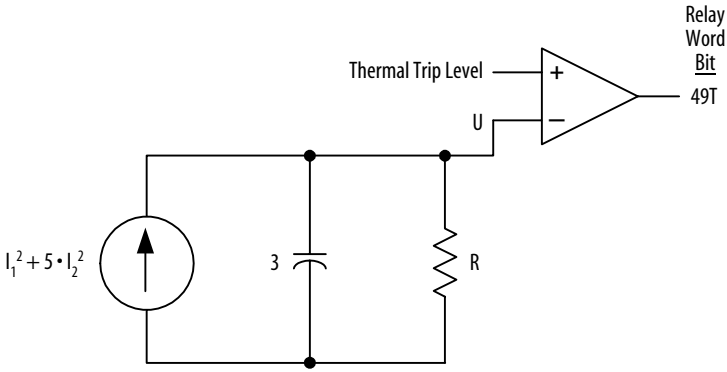

Figure E.5 Motor Running Thermal Element With Resistance and Trip Level Undefined.

When the motor is running, it returns heat energy to its surroundings through radiation, conduction, convection, and, in some cases, using forced cooling. The motor running thermal element provides a path for that energy return through the resistor, R, in *Figure E.5*.

To determine the value of that resistor, recall that the motor will reach an energy level representing its rated operating temperature when 1 per unit of positive sequence current flows in the motor for a long time. Since the positive-sequence heat factor, K_1, is 1 in the running model, and 1 per unit of I_1 squared equals 1, the value of resistor R equals the energy level representing the motor rated operating temperature.

To determine the normal operating energy, recall that many motor datasheets publish two locked rotor trip times: one longer time when the motor is started from ambient temperature (referred to as Ta) and one shorter time when the motor is started from operating temperature (To).

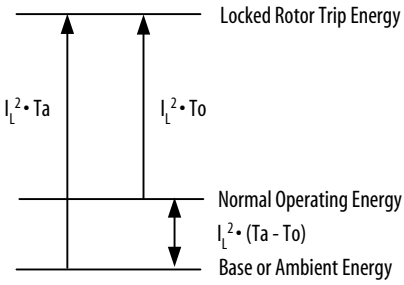

Figure E.6 Calculating the Normal Operating Energy Using Locked Rotor Trip Times.

Figure E.6 shows a graphical representation of the problem and its solution. The motor normal operating energy is the difference between the ambient and operating temperature locked rotor times, multiplied by locked rotor current squared. For those motors that do not publish separate locked rotor times, assume that the locked rotor trip energy is approximately six times the operating energy in the relation.

$$\frac{I_L^2 \bullet Ta}{I_L^2 \bullet (Ta - To)} = 6 \therefore \frac{Ta}{To} = 1.2 \therefore (Ta - To) = 0.2 \bullet Ta$$

Equation E.8

The motor ratings allow the motor to be run continuously at the motor service factor, thus the service factor, SF, is accounted for in the running thermal element trip threshold. *Figure E.7* shows the final running thermal element.

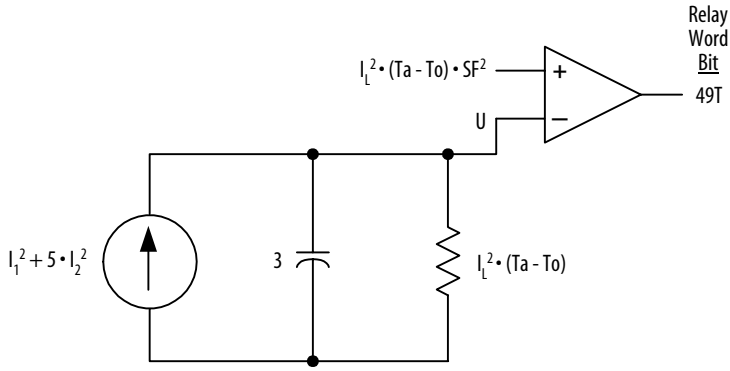

Figure E.7 Motor Running Thermal Element.

EXAMPLE E.1 Starting and Running Trip Level Calculations

Given a motor with the following characteristics, calculate the starting and running thermal model trip thresholds.

Service Factor, SF = 1.15
Locked Rotor Current, I_L = 6 per unit of full load amps
Locked Rotor Time From Operating Temperature, To = 12 seconds
Locked Rotor Time From Ambient Temperature, Ta = 14.4 seconds

Motor Starting Trip Threshold = $I_L^2 \cdot To$
$= 36 \cdot 12$
$= 432$

Motor Running Trip Threshold = $I_L^2 \cdot (Ta - To) \cdot SF^2$
$= 36 \cdot 2.4 \cdot 1.323$
$= 114.3$

Example E.1 illustrates the difference between the trip thresholds of the starting and running thermal elements. When the monitor switches from the starting to the running thermal element, it maintains the present heat estimate, U, which begins to decrease due to the drop in current-squared and due to the insertion of the resistor into the model. The decay of U is exponential due to the interaction between the model thermal capacitance and resistance. Rather than instantly switch from the high starting trip threshold to the low running trip threshold, the monitor allows the trip threshold to decay exponentially using the same time-constant as the thermal element RC circuit from the initial starting value to the final running value.

Interpreting Percent Thermal Element Capacity Values

Several of the SEL-701-1 Monitor reporting functions include a % Thermal Capacity value. At all times, the monitor calculates the percent thermal capacity using *Equation E.9*.

$$\%\ \text{Thermal Capacity} = \frac{\text{Present Heat Estimate, U}}{\text{Present Thermal Trip Value}} \bullet 100\ \%$$

Equation E.9

By this definition, when the % Thermal Capacity reaches 100%, the heat estimate equals the trip value and the thermal element trips.

As *Example E.1 on page E.11* shows, the thermal trip values for the running and starting elements are very different. For this reason, it is not generally meaningful to compare the % Thermal Capacity during a start to the % Thermal Capacity during running conditions. However, it is quite useful to compare the % Thermal Capacities of several starts using the monitor Motor Start Reports and Motor Start Trend data. Using this data, you may notice an increasing trend in the Starting % Thermal Capacity, the final % Thermal Capacity value when the thermal model switches from starting to running. This could indicate gradually increasing load torque which could eventually result in an undesirable locked rotor trip and subsequent down-time.

The average and peak running % Thermal Capacity values reported in the motor operating statistics report also offer a useful basis of comparison, allowing you to compare the present % Thermal Capacity to normal values.

Motor Starting Thermal Capacity

A normal motor start is expected to use a significant percentage of the available starting thermal capacity. After a motor start, it is generally necessary for the motor to cool for a time before another start is permitted. The cooling can usually take place while the motor is stopped or running.

If a motor usually requires 70% of the available thermal capacity to start and if a start is attempted while the present % Thermal Capacity exceeds 30%, a locked rotor trip is likely because the motor is still too hot.

The SEL-701-1 Monitor provides two facilities to help ensure that a motor start is not attempted while the motor is still too hot to be started safely. The Thermal Capacity Used to Start (TCSTART) setting allows you to define a fixed value of thermal capacity that you expect the motor to use on a start. The monitor adds a 10% safety margin to this setting, thus if you set Thermal Capacity Used to Start equal to 65%, the monitor requires the % Thermal Capacity to fall below 25% (100% – 65% – 10% = 25%) when the motor is stopped before another start is permitted. The monitor asserts the Thermal Lockout until the motor is cool.

In addition, the monitor learns a thermal capacity used to start by recording the thermal capacity used during each of the past five successful motor starts. This learned parameter is reported in the motor operating statistics report. When you set Use Learned Starting Thermal Capacity (TCLRNEN) equal to Y, the monitor uses the largest of the last five starting percentages in place of the TCSTART value to determine when to release the thermal lockout.

NOTE: Since the Thermal Capacity Used to Start percentage is based on the starting thermal element trip threshold, the monitor automatically switches to that threshold for % Thermal Capacity calculation as soon as the motor stops. You may observe this as a large drop in the % Thermal Capacity value when you stop the motor. This is normal operation for the SEL-701-1 Monitor.

This page intentionally left blank

Date _____

Created by *Factory Defaults*

Appendix F

SEL-701-1 Monitor Settings Sheets

MONITOR SETTINGS *(Factory Defaults, Model 070111X)*

General Data

Relay Identifier
Range: 20 Characters — **RID** = SEL-701-1

Terminal Identifier
Range: 20 Characters — **TID** = *MONITOR*

Phase (IA, IB, IC) CT Ratio
Range: 1-6000 to 1 — **CTR** = *100*

Phase CT Secondary Rating
Range: 1 A, 5 A — **ITAP** = *5*

Neutral (IN) CT Ratio
Range: 1-6000 to 1 — **CTRN** = *100*

Neutral CT Secondary Rating
Range: 1 A, 5 A — **INTAP** = *5*

Phase Rotation
Range: ABC, ACB — **PHROT** = *ABC*

Nominal Frequency
Range: 50, 60 Hz — **FNOM** = *60*

Date Format
Range: MDY, YMD — **DATE_F** = *MDY*

Demand Meter Time Constant
Range: 5, 10, 15, 30, 60 min — **DTMC** = *15*

Phase (VA, VB, VC) VT Ratio *(Hidden if voltages not included)*
Range: 1-6000 to 1 — **PTR** = *100*

Phase VT Connection *(Hidden if voltages not included)*
Range: D, Y — **DELTA_Y** = *Y*

Single Voltage Input *(Hidden if voltages not included)*
Range: Y, N — **SINGLEV** = *N*

Date _____

Created by *Factory Defaults*

Thermal Model Elements

Setting Method
Range: OFF, Rating, Generic, User — **SETMETH** = *RATING*

Thermal Element Settings when Setting Method = RATING

(Hidden when SETMETH = GENERIC or USER)

Full Load Amps
Range: 1.00–8.00 A; ITAP = 5 A
0.20–1.60 A; ITAP = 1 A — **FLA** = *5.00*

Service Factor
Range: 1.00–1.50 — **SF** = *1.15*

Locked Rotor Amps
Range: 2.50–80.00 A; ITAP = 5 A
0.50–16.00 A; ITAP = 1 A — **LRA** = *30.00*

Hot Locked Rotor Time
Range: 1.0–200.0 s — **LRTHOT** = *2.1*

Cold Locked Rotor Time
Range: 1.0–240.0 s — **LRTCOLD** = *2.5*

Locked Rotor Trip Time Dial
Range: 0.10–1.50 — **TD** = 1.00

Thermal Element Settings when Setting Method = GENERIC

(Hidden when SETMETH = RATING or USER)

Full Load Amps
Range: 1.00–8.00 A; ITAP = 5 A
0.20–1.60 A; ITAP = 1 A — **FLA** = *5.00*

Service Factor
Range: 1.00–1.50 — **SF** = *1.15*

Curve Number
Range: 1–45 — **CURVE** = *(Hidden)*

Thermal Element Settings when Setting Method = USER

(Hidden when SETMETH = RATING or GENERIC)

Full Load Amps
Range: 1.00–8.00 A; ITAP = 5 A
0.20–1.60 A; ITAP = 1 A — **FLA** = *5.00*

Service Factor
Range: 1.00–1.50 — **SF** = *1.15*

Time to Trip at 1.05 x FLA
Range: 1.0–6000.0 s, NP — **TTT105** = *(Hidden)*

Time to Trip at 1.10 x FLA
Range: 1.0–6000.0 s, NP — **TTT110** = *(Hidden)*

Time to Trip at 1.20 x FLA
Range: 1.0–6000.0 s, NP — **TTT120** = *(Hidden)*

Time to Trip at 1.30 x FLA
Range: 1.0–6000.0 s, NP — **TTT130** = *(Hidden)*

Time to Trip at 1.40 x FLA
Range: 1.0–6000.0 s, NP
TTT140 = *(Hidden)*

Time to Trip at 1.50 x FLA
Range: 1.0–6000.0 s, NP
TTT150 = *(Hidden)*

Time to Trip at 1.75 x FLA
Range: 1.0–6000.0 s, NP
TTT175 = *(Hidden)*

Time to Trip at 2.00 x FLA
Range: 1.0–6000.0 s
TTT200 = *(Hidden)*

Time to Trip at 2.25 x FLA
Range: 1.0–6000.0 s, NP
TTT225 = *(Hidden)*

Time to Trip at 2.50 x FLA
Range: 1.0–6000.0 s
TTT250 = *(Hidden)*

Time to Trip at 2.75 x FLA
Range: 1.0–6000.0 s, NP
TTT275 = *(Hidden)*

Time to Trip at 3.00 x FLA
Range: 1.0–6000.0 s, NP
TTT300 = *(Hidden)*

Time to Trip at 3.50 x FLA
Range: 1.0–6000.0 s, NP
TTT350 = *(Hidden)*

Time to Trip at 4.00 x FLA
Range: 1.0–6000.0 s, NP
TTT400 = *(Hidden)*

Time to Trip at 4.50 x FLA
Range: 1.0–6000.0 s, NP
TTT450 = *(Hidden)*

Time to Trip at 5.00 x FLA
Range: 1.0–600.0 s, NP
TTT500 = *(Hidden)*

Time to Trip at 5.50 x FLA
Range: 1.0–600.0 s
TTT550 = *(Hidden)*

Time to Trip at 6.00 x FLA
Range: 1.0–600.0 s
TTT600 = *(Hidden)*

Time to Trip at 6.50 x FLA
Range: 1.0–600.0 s
TTT650 = *(Hidden)*

Time to Trip at 7.00 x FLA
Range: 1.0–400.0 s
TTT700 = *(Hidden)*

Time to Trip at 7.50 x FLA
Range: 1.0–450.0 s, NP
TTT750 = *(Hidden)*

Time to Trip at 8.00 x FLA
Range: 1.0–400.0 s, NP
TTT800 = *(Hidden)*

Time to Trip at 8.50 x FLA
Range: 1.0–350.0 s, NP
TTT850 = *(Hidden)*

Time to Trip at 9.00 x FLA
Range: 1.0–300.0 s, NP
TTT900 = *(Hidden)*

Time to Trip at 10.00 x FLA
Range: 1.0–225.0 s, NP
TTT1000 = *(Hidden)*

Date _____

Created by *Factory Defaults*

The balance of Thermal Element Settings are used regardless of setting method.

Thermal Capacity Alarm Pickup
Range: 50%–100%
TCAPU = *90*

Thermal Capacity Used to Start
Range: 20%–100%
TCSTART = *85*

Use Learned Starting Thermal Capacity
Range: Y, N
TCLRNEN = *Y*

Motor Stopped Cooling Time
Range: 180–72000 s
COOLTIME = *259*

Use Learned Cooling Time *(Hidden when RTDOPT = NONE)*
Range: Y, N
COOLEN = *Y*

Overcurrent (O/C) Elements

(Time-delay settings are hidden when their associated pickup settings = OFF)

Level 1 Phase O/C Pickup
Range: OFF, 0.25–100.00 A; ITAP = 5 A
OFF, 0.05–20.00 A; ITAP = 1 A
50P1P = *OFF*

Level 1 Phase O/C Time Delay
Range: 0.00–400.00 s
50P1D = *(Hidden)*

Level 2 Phase O/C Pickup
Range: OFF, 0.25–100.00 A; ITAP = 5 A
OFF, 0.05–20.00 A; ITAP = 1 A
50P2P = *OFF*

Level 2 Phase O/C Time Delay
Range: 0.00–400.00 s
50P2D = *(Hidden)*

Level 1 Residual O/C Pickup
Range: OFF, 0.25–100.00 A; ITAP = 5 A
OFF, 0.05–20.00 A; ITAP = 1 A
50G1P = *2.50*

Level 1 Residual O/C Time Delay
Range: 0.00–400.00 s
50G1D = *0.10*

Level 2 Residual O/C Pickup
Range: OFF, 0.25–100.00 A; ITAP = 5 A
OFF, 0.05–20.00 A; ITAP = 1 A
50G2P = *OFF*

Level 2 Residual O/C Time Delay
Range: 0.00–400.00 s
50G2D = *(Hidden)*

Level 1 Neutral O/C Pickup
Range: OFF, 0.025–10.000 A; INTAP = 5A
OFF, 0.005–2.000 A; INTAP = 1 A
50N1P = *2.500*

Level 1 Neutral O/C Time Delay
Range: 0.00–400.00 s
50N1D = *0.10*

Level 2 Neutral O/C Pickup
Range: OFF, 0.025–10.000 A; INTAP = 5 A
OFF, 0.005–2.000 A; INTAP = 1 A
50N2P = *OFF*

Level 2 Neutral O/C Time Delay
Range: 0.00–400.00 s
50N2D = *(Hidden)*

Negative-Sequence O/C Pickup
Range: OFF, 0.25–100.00 A; ITAP = 5 A
OFF, 0.05–20.00 A; ITAP = 1 A
50QP = *OFF*

Negative-Sequence O/C Time Delay
Range: 0.10–400.00 s
50QD = *(Hidden)*

Jogging Block Element Settings

Maximum Number of Starts per Hour
Range: OFF, 1–15
MAXSTART = *3*

Minimum Time Between Starts
Range: OFF, 1–150 min
TBSDLY = *20*

Load-Jam Function Settings

Load-Jam Trip Pickup
Range: OFF, 0.5–6.0 pu FLA
LJTPU = *2.0*

Load-Jam Trip Delay
Range: 0.00–400.0 s
LJTDLY = *1.00*

Load-Loss Element Settings

(Hidden when voltage option available)

Load-Loss Alarm Threshold
Range: OFF, 30–2000 W; ITAP = 5 A
OFF, 6–400 W; ITAP = 1 A
LLAPU = *OFF*

(Hidden when LLAPU = OFF)

Load-Loss Trip Threshold
Range: 30–2000 W; ITAP = 5 A
6–400 W; ITAP = 1 A
LLTPU = *100*

Load-Loss Starting Time Delay
Range: 0–15000 s
LLSDLY = *0*

Load-Loss Alarm Time Delay
Range: 0.00–400.00 s
LLADLY = *5.00*

Load-Loss Trip Time Delay
Range: 0.00–400.00 s
LLTDLY = *10.00*

(Hidden when voltage option unavailable)

Load-Loss Alarm Threshold
Range: OFF, 0.10–1.00 pu FLA
LLAPU = *OFF*

Date _____

Created by *Factory Defaults*

Load-Loss Trip Threshold
Range: 0.10–1.00 pu FLA **LLTPU** = *0.5*

Load-Loss Starting Time Delay
Range: 0–15000 s **LLSDLY** = *0*

Load-Loss Alarm Time Delay
Range: 0.00–400.00 s **LLADLY** = *5.00*

Load-Loss Trip Time Delay
Range: 0.00–400.00 s **LLTDLY** = *10.00*

Current Unbalance Elements Settings

Current Unbalance Alarm Pickup
Range: OFF, 2%–80% **46UBA** = *10*

Current Unbalance Alarm Delay
Range: 0.10–400.00 s **46UBAD** = *10.00*

Current Unbalance Trip Pickup
Range: OFF, 2%–80% **46UBT** = *15*

Current Unbalance Trip Delay
Range: 0.10–400.00 s **46UBTD** = *5.00*

Phase Reversal Tripping Setting

Enable Phase Reversal Tripping
Range: Y, N **E47T** = *Y*

Speed Switch Tripping Time Delay Setting

Speed Switch Trip Time Delay
Range: OFF, 0.50–400.00 s **SPDSDLY** = *OFF*

RTD Configuration Settings

RTD Input Option *(INT is not available if no RTD option)*
Range: INT, EXT, NONE **RTDOPT** = *None*

Temperature Preference Setting *(Hidden when RTDOPT = NONE)*
Range: C, F **TMPREF** = *(Hidden)*

RTD Location Settings *(Hidden when RTDOPT = NONE)*

RTD Location
Range: WDG, BRG, AMB, OTH, NONE **RTD1LOC** = *(Hidden)*

RTD Location
Range: WDG, BRG, AMB, OTH, NONE **RTD2LOC** = *(Hidden)*

RTD Location
Range: WDG, BRG, AMB, OTH, NONE **RTD3LOC** = *(Hidden)*

RTD Location
Range: WDG, BRG, AMB, OTH, NONE **RTD4LOC** = *(Hidden)*

RTD Location
Range: WDG, BRG, AMB, OTH, NONE **RTD5LOC** = *(Hidden)*

RTD Location
Range: WDG, BRG, AMB, OTH, NONE **RTD6LOC** = *(Hidden)*

RTD Location
Range: WDG, BRG, AMB, OTH, NONE **RTD7LOC** = *(Hidden)*

RTD Location
Range: WDG, BRG, AMB, OTH, NONE **RTD8LOC** = *(Hidden)*

RTD Location
Range: WDG, BRG, AMB, OTH, NONE **RTD9LOC** = *(Hidden)*

RTD Location
Range: WDG, BRG, AMB, OTH, NONE **RTD10LOC** = *(Hidden)*

RTD Location
Range: WDG, BRG, AMB, OTH, NONE **RTD11LOC** = *(Hidden)*

RTD Location *(Hidden when RTDOPT = INT)*
Range: WDG, BRG, AMB, OTH, NONE **RTD12LOC** = *(Hidden)*

RTD Identifier Settings

(Hidden when RTDXLOC = WDG, BRG, AMB, or NONE

RTD Identifier
Range: 10 Characters **RTD1NAM** = *(Hidden)*

RTD Identifier
Range: 10 Characters **RTD2NAM** = *(Hidden)*

RTD Identifier
Range: 10 Characters **RTD3NAM** = *(Hidden)*

RTD Identifier
Range: 10 Characters **RTD4NAM** = *(Hidden)*

RTD Identifier
Range: 10 Characters **RTD5NAM** = *(Hidden)*

RTD Identifier
Range: 10 Characters **RTD6NAM** = *(Hidden)*

RTD Identifier
Range: 10 Characters **RTD7NAM** = *(Hidden)*

RTD Identifier
Range: 10 Characters **RTD8NAM** = *(Hidden)*

RTD Identifier
Range: 10 Characters **RTD9NAM** = *(Hidden)*

Date _____

Created by *Factory Defaults*

RTD Identifier
Range: 10 Characters — **RTD10NAM** = *(Hidden)*

RTD Identifier
Range: 10 Charachers — **RTD11NAM** = *(Hidden)*

RTD Identifier
Range: 10 Characters — **RTD12NAM** = *(Hidden)*

RTD Type Settings *(Hidden when RTDOPT = NONE)*

RTD Type
Range: PT100, NI100, NI120, CU10 — **RTD1TY** = *(Hidden)*

RTD Type
Range: PT100, NI100, NI120, CU10 — **RTD2TY** = *(Hidden)*

RTD Type
Range: PT100, NI100, NI120, CU10 — **RTD3TY** = *(Hidden)*

RTD Type
Range: PT100, NI100, NI120, CU10 — **RTD4TY** = *(Hidden)*

RTD Type
Range: PT100, NI100, NI120, CU10 — **RTD5TY** = *(Hidden)*

RTD Type
Range: PT100, NI100, NI120, CU10 — **RTD6TY** = *(Hidden)*

RTD Type
Range: PT100, NI100, NI120, CU10 — **RTD7TY** = *(Hidden)*

RTD Type
Range: PT100, NI100, NI120, CU10 — **RTD8TY** = *(Hidden)*

RTD Type
Range: PT100, NI100, NI120, CU10 — **RTD9TY** = *(Hidden)*

RTD Type
Range: PT100, NI100, NI120, CU10 — **RTD10TY** = *(Hidden)*

RTD Type
Range: PT100, NI100, NI120, CU10 — **RTD11TY** = *(Hidden)*

RTD Type *(Hidden when RTDOPT = INT)*
Range: PT100, NI100, NI120, CU10 — **RTD12TY** = *(Hidden)*

RTD Temperature Settings *(Hidden when RTDOPT = NONE)*

RTD Trip Temperature
Range: OFF, 0°–250°C
OFF, 32°–482°F — **RTD1T** = *(Hidden)*

RTD Alarm Temperature
Range: OFF, 0°–250°C
OFF, 32°–482°F — **RTD1A1** = *(Hidden)*

RTD Alarm Temperature
Range: OFF, 0°–250°C
OFF, 32°–482°F

RTD1A2 = *(Hidden)*

RTD Alarm Temperature
Range: OFF, 0°–250°C
OFF, 32°–482°F

RTD1A3 = *(Hidden)*

RTD Trip Temperature
Range: OFF, 0°–250°C
OFF, 32°–482°F

RTD2T = *(Hidden)*

RTD Alarm Temperature
Range: OFF, 0°–250°C
OFF, 32°–482°F

RTD2A1 = *(Hidden)*

RTD Alarm Temperature
Range: OFF, 0°–250°C
OFF, 32°–482°F

RTD2A2 = *(Hidden)*

RTD Alarm Temperature
Range: OFF, 0°–250°C
OFF, 32°–482°F

RTD2A3 = *(Hidden)*

RTD Trip Temperature
Range: OFF, 0°–250°C
OFF, 32°–482°F

RTD3T = *(Hidden)*

RTD Alarm Temperature
Range: OFF, 0°–250°C
OFF, 32°–482°F

RTD3A1 = *(Hidden)*

RTD Alarm Temperature
Range: OFF, 0°–250°C
OFF, 32°–482°F

RTD3A2 = *(Hidden)*

RTD Alarm Temperature
Range: OFF, 0°–250°C
OFF, 32°–482°F

RTD3A3 = *(Hidden)*

RTD Trip Temperature
Range: OFF, 0°–250°C
OFF, 32°–482°F

RTD4T = *(Hidden)*

RTD Alarm Temperature
Range: OFF, 0°–250°C
OFF, 32°–482°F

RTD4A1 = *(Hidden)*

RTD Alarm Temperature
Range: OFF, 0°–250°C
OFF, 32°–482°F

RTD4A2 = *(Hidden)*

RTD Alarm Temperature
Range: OFF, 0°–250°C
OFF, 32°–482°F

RTD4A3 = *(Hidden)*

Date _____

Created by *Factory Defaults*

RTD Trip Temperature
Range: OFF, 0°–250°C
OFF, 32°–482°F

RTD5T = *(Hidden)*

RTD Alarm Temperature
Range: OFF, 0°–250°C
OFF, 32°–482°F

RTD5A1 = *(Hidden)*

RTD Alarm Temperature
Range: OFF, 0°–250°C
OFF, 32°–482°F

RTD5A2 = *(Hidden)*

RTD Alarm Temperature
Range: OFF, 0°–250°C
OFF, 32°–482°F

RTD5A3 = *(Hidden)*

RTD Trip Temperature
Range: OFF, 0°–250°C
OFF, 32°–482°F

RTD6T = *(Hidden)*

RTD Alarm Temperature
Range: OFF, 0°–250°C
OFF, 32°–482°F

RTD6A1 = *(Hidden)*

RTD Alarm Temperature
Range: OFF, 0°–250°C
OFF, 32°–482°F

RTD6A2 = *(Hidden)*

RTD Alarm Temperature
Range: OFF, 0°–250°C
OFF, 32°–482°F

RTD6A3 = *(Hidden)*

RTD Trip Temperature
Range: OFF, 0°–250°C
OFF, 32°–482°F

RTD7T = *(Hidden)*

RTD Alarm Temperature
Range: OFF, 0°–250°C
OFF, 32°–482°F

RTD7A1 = *(Hidden)*

RTD Alarm Temperature
Range: OFF, 0°–250°C
OFF, 32°–482°F

RTD7A2 = *(Hidden)*

RTD Alarm Temperature
Range: OFF, 0°–250°C
OFF, 32°–482°F

RTD7A3 = *(Hidden)*

RTD Trip Temperature
Range: OFF, 0°–250°C
OFF, 32°–482°F

RTD8T = *(Hidden)*

RTD Alarm Temperature
Range: OFF, 0°–250°C
OFF, 32°–482°F

RTD8A1 = *(Hidden)*

RTD Alarm Temperature
Range: OFF, 0°–250°C
OFF, 32°–482°F

RTD8A2 = *(Hidden)*

RTD Alarm Temperature
Range: OFF, 0°–250°C
OFF, 32°–482°F

RTD8A3 = *(Hidden)*

RTD Trip Temperature
Range: OFF, 0°–250°C
OFF, 32°–482°F

RTD9T = *(Hidden)*

RTD Alarm Temperature
Range: OFF, 0°–250°C
OFF, 32°–482°F

RTD9A1 = *(Hidden)*

RTD Alarm Temperature
Range: OFF, 0°–250°C
OFF, 32°–482°F

RTD9A2 = *(Hidden)*

RTD Alarm Temperature
Range: OFF, 0°–250°C
OFF, 32°–482°F

RTD9A3 = *(Hidden)*

RTD Trip Temperature
Range: OFF, 0°–250°C
OFF, 32°–482°F

RTD10T = *(Hidden)*

RTD Alarm Temperature
Range: OFF, 0°–250°C
OFF, 32°–482°F

RTD10A1 = *(Hidden)*

RTD Alarm Temperature
Range: OFF, 0°–250°C
OFF, 32°–482°F

RTD10A2 = *(Hidden)*

RTD Alarm Temperature
Range: OFF, 0°–250°C
OFF, 32°–482°F

RTD10A3 = *(Hidden)*

RTD Trip Temperature
Range: OFF, 0°–250°C
OFF, 32°–482°F

RTD11T = *(Hidden)*

RTD Alarm Temperature
Range: OFF, 0°–250°C
OFF, 32°–482°F

RTD11A1 = *(Hidden)*

RTD Alarm Temperature
Range: OFF, 0°–250°C
OFF, 32°–482°F

RTD11A2 = *(Hidden)*

RTD Alarm Temperature
Range: OFF, 0°–250°C
OFF, 32°–482°F

RTD11A3 = *(Hidden)*

Date _____

Created by *Factory Defaults*

RTD Trip Temperature
Range: OFF, 0°–250°C
OFF, 32°–482°F

RTD12T = *(Hidden)*

RTD Alarm Temperature
Range: OFF, 0°–250°C
OFF, 32°–482°F

RTD12A1 = *(Hidden)*

RTD Alarm Temperature
Range: OFF, 0°–250°C
OFF, 32°–482°F

RTD12A2 = *(Hidden)*

RTD Alarm Temperature
Range: OFF, 0°–250°C
OFF, 32°–482°F

RTD12A3 = *(Hidden)*

Enable Winding Trip Voting
(Hidden if <2 RTD Winding trip temperatures are NOT OFF)
Range: Y, N

EWDGV = *(Hidden)*

Enable Bearing Trip Voting
(Hidden if <2 RTD Winding trip temperatures are NOT OFF)
Range: Y, N

EBRGV = *(Hidden)*

Enable RTD Biasing
(Hidden if no RTDnLOC = AMB, or if all winding RTD trip temperatures are OFF.)
Range: Y, N

RTDBEN = *(Hidden)*

VOLTAGE-BASED PROTECTION

Undervoltage (U/V) Elements
(Hidden if no voltage option or if DELTA_Y = Y)

Level 1 Phase-Phase U/V Pickup
Range: OFF, 1–300 V **27P1P** = *(Hidden)*

Level 2 Phase-Phase U/V Pickup
Range: OFF, 1–300 V **27P2P** = *(Hidden)*

Overvoltage (O/V) Elements
(Hidden if no voltage option or if DELTA_Y = Y)

Level 1 Phase-Phase O/V Pickup
Range: OFF, 1–300 V **59P1P** = *(Hidden)*

Level 2 Phase-Phase O/V Pickup
Range: OFF, 1–300 V **59P2P** = *(Hidden)*

Undervoltage (U/V) Elements
(Hidden if no voltage option or if DELTA_Y = D)

Level 1 Phase U/V Pickup
Range: OFF, 1–300 V **27P1P** = *40*

Level 2 Phase U/V Pickup
Range: OFF, 1–300 V **27P2P** = *OFF*

Overvoltage (O/V) Elements
(Hidden if no voltage option or if DELTA_Y = D)

Level 1 Phase O/V Pickup
Range: OFF, 1–300 V **59P1P** = *73*

Level 2 Phase O/V Pickup
Range: OFF, 1–300 V **59P2P** = *OFF*

Residual O/V Pickup *(Hidden if SINGLEV = Y)*
Range: OFF, 1–300 V **59GP** = *OFF*

Reactive Power (VAR) Element Settings
(Hidden if no voltage option)

Negative VAR Alarm Pickup
Range: OFF, 30–2000 VAR; ITAP = 5 A
OFF, 6–400 VAR; ITAP = 1 A **NVARAP** = *OFF*

Positive VAR Alarm Pickup *(Hidden if NVARAP = OFF)*
Range: 30–2000 VAR; ITAP = 5 A
6–400 VAR; ITAP = 1 A **PVARAP** = *(Hidden)*

VAR Alarm Time Delay *(Hidden if NVARAP = OFF)*
Range: 0.00–400.00 s **VARAD** = *(Hidden)*

Negative VAR Trip Pickup
Range: OFF, 30–2000 VAR; ITAP = 5 A
OFF, 6–400 VAR; ITAP = 1 A **NVARTP** = *OFF*

Date _____

Created by Factory Defaults

Positive VAR Trip Pickup *(Hidden if NVARTP = OFF)*
Range: 30–2000 VAR; ITAP = 5 A
6–400 VAR; ITAP = 1 A
PVARTP = *(Hidden)*

VAR Trip Time Delay *(Hidden if NVARTP = OFF)*
Range: 0.00–400.00 s
VARTD = *(Hidden)*

VAR Element Arming Delay *(Hidden if both NVARAP and NVARTP = OFF)*
Range: 0.00–15000 s
VARDLY = *(Hidden)*

Underpower Element Settings *(Hidden if no voltage option)*

Phase Underpower Alarm Pickup
Range: OFF, 30–2000 W; ITAP = 5 A
OFF, 6–400 W; ITAP = 1 A
37PAP = *OFF*

Phase Underpower Alarm Time Delay *(Hidden if 37PAP = OFF)*
Range: 0.00–400.00 s
37PAD = *(Hidden)*

Phase Underpower Trip Pickup
Range: OFF, 30–2000 W; ITAP = 5 A
OFF, 6–400 W; ITAP = 1 A
37PTP = *OFF*

Phase Underpower Trip Time Delay *(Hidden if 37PTP = OFF)*
Range: 0.00–400.00 s
37PTD = *(Hidden)*

Underpower Element Arming Delay *(Hidden if both 37PAP and 37PTP = OFF)*
Range: 0–15000 s
37DLY = *(Hidden)*

Power Factor Element Settings *(Hidden if no voltage option)*

Power Factor Alarm Leading Pickup
Range: OFF, 0.05–0.99
55LDAP = *OFF*

Power Factor Alarm Lagging Pickup *(Hidden if 55LDAP = OFF)*
Range: 0.05–0.99
55LGAP = *(Hidden)*

Power Factor Alarm Time Delay *(Hidden if 55LDAP = OFF)*
Range: 0.00–400.00 s
55AD = *(Hidden)*

Power Factor Trip Leading Pickup
Range: OFF, 0.05–0.99
55LDTP = *OFF*

Power Factor Trip Lagging Pickup *(Hidden if 55LDTP = OFF)*
Range: 0.05–0.99
55LGTP = *(Hidden)*

Power Factor Trip Time Delay *(Hidden if 55LDTP = OFF)*
Range: 0.00–400.00 s
55TD = *(Hidden)*

Power Factor Element Arming Delay *(Hidden if both 55LDAP and 55LDTP = OFF)*
Range: 0–15000 s
55DLY = *(Hidden)*

Frequency Elements Settings *(Hidden if no voltage option)*

Level 1 Pickup
Range: OFF, 20.00–70.00 Hz **81D1P** = *59.10*

Level 1 Time Delay *(Hidden if 81D1P = OFF)*
Range: 0.03–400.00 s **81D1D** = *0.03*

Level 2 Pickup
Range: OFF, 20.00–70.00 Hz **81D2P** = *OFF*

Level 2 Time Delay *(Hidden if 81D2P = OFF)*
Range: 0.03–400.00 s **81D2D** = *(Hidden)*

Level 3 Pickup
Range: OFF, 20.00–70.00 Hz **81D3P** = *OFF*

Level 3 Time Delay *(Hidden if 81D3P = OFF)*
Range: 0.03–400.00 s **81D3D** = *(Hidden)*

Date _____

Created by *Factory Defaults*

OUTPUT CONFIGURATION

Analog Output Settings

Analog Output Signal Type
Range: 0–1 mA, 0–20 mA, 4–20 mA

AOSIG = *4–20 mA*

Analog Output Parameter
Range: %Load_I Percentage of Full Load Current
%THERM Percentage Thermal Capacity
WDG_RTD Hottest Winding RTD Temperature
BRG_RTD Hottest Bearing RTD Temperature
AVG_I Average Phase Current
MAX_I Maximum Phase Current

AOPARM = *%LOAD_I*

Analog Output Full Scale Current *(Only shown if AOPARM = AVG_I or MAX_I)*
Range: 0.5–80.0 A; ITAP = 5 A
0.1–16.0 A; ITAP = 1 A

AOFSC = *(Hidden)*

Front-Panel Display Settings

Front-Panel Timeout
Range: 0–30 min

FP_TO = *15*

Front-Panel Display Brightness
Range: 25%, 50%, 75%, 100%

FPBRITE = *50*

Front-Panel Power Display *(Hidden if no voltage option)*
Range: Y, N

FP_KW = *N*

Front-Panel RTD Display *(Hidden if RTDOPT = NONE)*
Range: Y, N

FP_RTD = *(Hidden)*

Front-Panel Display Message Settings

Display Messages
Range: 20 Characters; enter NA to null

DM1_1 = SEL-701-1

DM1_0 =

DM2_1 = *MONITOR*

DM2_0 =

DM3_1 = *RTD FAILURE*

DM3_0 =

DM4_1 =

DM4_0 =

DM5_1 =

DM5_0 = _____

DM6_1 = _____

DM6_0 = _____

Output Contact Settings

Enable TRIP Contact Fail-Safe
Range: Y, N — **TRFS** = *Y*

Enable OUT1 Contact Fail-Safe
Range: Y, N — **OUT1FS** = *N*

Enable OUT2 Contact Fail-Safe
Range: Y, N — **OUT2FS** = *N*

Enable OUT3 Contact Fail-Safe
Range: Y, N — **OUT3FS** = *N*

Minimum Trip Duration Time
Range: 0.00–400.00 s — **TDURD** = *0.5*

Antibackspin Setting

Antibackspin Starting Delay
Range: 0–60 min — **ABSDLY** = *0*

Factory Logic Settings

Use Factory Logic Settings
Range: Y, N — **FACTLOG** = *Y*

Front-Panel Display Message Variables *(Hidden if FACTLOG = Y)*

Display Message Variables
Range: SELOGIC Control Equation — **DM1** = *1*

DM2 = *1*

DM3 = *RTDFLT*

DM4 = *0*

DM5 = *0*

DM6 = *0*

Logic Variables *(Hidden if FACTLOG = Y)*

Logic Variable
Range: SELOGIC Control Equation — **SV1** = *0*

SV2 = *0*

Date _____

Created by *Factory Defaults*

SV3 = *0*

SV4 = *0*

Set/Reset Latch Variables *(Hidden if FACTLOG = Y)*

Latch Variable (1-4)
Range: SELOGIC Control Equation

SET1 = *0*

RST1 = *1*

SET2 = *0*

RST2 = *1*

SET3 = *0*

RST3 = *1*

SET4 = *0*

RST4 = *1*

Output Variables *(Hidden if FACTLOG = Y)*

Trip Variable
Range: SELOGIC Control Equation

TRIP = *JAMTRIP + 46UBT + 49T + 50P1T +50P2T + 50N1T + 50N2T + 50G1T + 50G2T + 50QT + 47T + SPDSTR + WDGTRIP + BRGTRIP + AMBTRIP + OTHTRIP + 81D1T + 81D2T + 81D3T + !27P1 * (LOSSTRIP + 37PT + 55T + VART) + IN2*

Unlatch Trip Variable
Range: SELOGIC Control Equation

ULTRIP = *0*

52A Variable
Range: SELOGIC Control Equation

52A = *!IN1*

Motor Start Variable
Range: SELOGIC Control Equation

STR = *0*

Emergency Restart Variable
Range: SELOGIC Control Equation

EMRSTR = *IN5 * STOPPED*

Password Access2 Variable
Range: SELOGIC Control Equation

ACCESS2 = *IN4*

Target Reset Variable
Range: SELOGIC Control Equation

TARR = *0*

Event Report Trigger Variable
Range: SELOGIC Control Equation

ER = */LOSSALRM + /46UBA + /49A + \81D1T + \81D2T + \81D3T + /37PA + /55A + /VARA*

Output Variables 1–3
Range: SELOGIC Control Equation

OUT1 = *LOSSALRM + 46UBA + 49A + 37PA + 55A + VARA*

OUT2 = *RTDBIAS + WDGALRM + BRGALRM + AMBALRM + OTHALRM + RTDFLT*

OUT3 = *START*

LED Logic *(Hidden if FACTLOG=Y)*

Use Factory LED Settings
Range: Y, N

FACTLED = *Y*

LED Variables 1–7 *(Hidden if FACTLED = Y)*
*Range:*SELOGIC Control Equation

LED1 = *0*

LED2 = *0*

LED3 = *0*

LED4 = *0*

LED5 = *0*

LED6 = *0*

LED7 = *0*

Date _____

Created by *Factory Defaults*

SERIAL PORT SETTINGS (SERIAL PORT COMMAND SET P F OR SET P R)

SET P Serial Port Settings

Protocol *(Hidden, Equal ASCII for Front Port)*
Range: ASCII, MOD — **PROTO** = *ASCII*

Protocol = ASCII *(Hidden when Protocol = MOD)*

Baud Rate
Range: 300–19200 — **SPEED** = *2400*

Data Bits
Range: 7, 8 — **BITS** = *8*

Parity
Range: O, E, N — **PARITY** = *N*

Stop Bits
Range: 1, 2 — **STOP** = *1*

Timeout
Range: 0–30 min — **T_OUT** = *15*

Send Auto Messages to Port
Range: Y, N — **AUTO** = *N*

Enable Hardware Handshaking
Range: Y, N — **RTSCTS** = *N*

Fast Operate Enable
Range: Y, N — **FASTOP** = *N*

Protocol = MOD *(Hidden when Protocol = ASCII)*

Baud Rate
Range: 300–19200 — **SPEED** = *2400*

Parity
Range: O, E, N — **PARITY** = *N*

Modbus® Slave ID
Range: 1–247 — **SLAVEID** = *1*

SEQUENTIAL EVENTS RECORDER SETTINGS (SET R)

SER Trigger Settings

SER1
Range: 24 Relay Word bits, separated by commas.
Use NA to disable setting.

SER1 = *IN1, IN2, IN3, IN4, IN5, IN6, IN7*

SER2
Range: 24 Relay Word bits, separated by commas.
Use NA to disable setting.

SER2 = *STARTING, RUNNING, STOPPED, JAMTRIP, LOSSALRM, LOSSTRIP, 46UBA, 46UBT, 49A, 49T,47T, SPEEDSW, SPEEDSTR, TRIP, OUT1, OUT2, OUT3, 50G1T, 50G2T, 50N1T, 50N2T*

SER3
Range: 24 Relay Word bits, separated by commas.
Use NA to disable setting.

SER3 = *RTDFLT, WDGALRM, WDGTRIP, BRGALRM, BRGTRIP, AMBALRM, AMBTRIP, OTHALRM, OTHTRIP, 81D1T, 81D2T, 81D3T, TRGTR, START, 50P1T, 50P2T*

SER4
Range: 24 Relay Word bits, separated by commas.
Use NA to disable setting.

SER4 = *NA*

SER Alias Settings

Enable ALIAS Settings
Range: N, 1–20

EALIAS = *17*

Date _____

Created by *Factory Defaults*

Alias Settings

(Hidden when EALIAS = N, ALIAS# > EALIAS setting are hidden.)

NOTE: Relay Word bit (space) Alias (space) Asserted text (space) Alias and text strings can each be up to 15 text characters. Asserted and deasserted text strings are not required. Use NA to disable setting.

ALIAS1 = *STARTING MOTOR_STARTING BEGINS ENDS*

ALIAS2 = *RUNNING MOTOR_RUNNING BEGINS ENDS*

ALIAS3 = *STOPPED MOTOR_STOPPED BEGINS ENDS*

ALIAS4 = *JAMTRIP LOAD_JAM_TRIP PICKUP DROPOUT*

ALIAS5 = *LOSSTRIP LOAD_LOSS_TRIP PICKUP DROPOUT*

ALIAS6 = *LOSSALRM LOAD_LOSS_ALARM PICKUP DROPOUT*

ALIAS7 = *46UBA UNBALNC_I_ALARM PICKUP DROPOUT*

ALIAS8 = *46UBT UNBALNC_I_TRIP PICKUP DROPOUT*

ALIAS9 = *49A THERMAL_ALARM PICKUP DROPOUT*

ALIAS10 = *49T THERMAL_TRIP PICKUP DROPOUT*

ALIAS11 = *47T PHS_REVRSL_TRIP PICKUP DROPOUT*

ALIAS12 = *SPDSTR SPEED_SW_TRIP PICKUP DROPOUT*

ALIAS13 = *IN2 DIRECT_TRIP_IN PICKUP DROPOUT*

ALIAS14 = *SPEEDSW SPEED_SW_IN PICKUP DROPOUT*

ALIAS15 = *IN5 EMERGNCY_RSTART PICKUP DROPOUT*

ALIAS16 = *IN1 MOTOR_BREAKER OPEN CLOSED*

ALIAS17 = *IN4 ACCESS2 ALLOWED PASSWORD_ONLY*

ALIAS18 =

ALIAS19 =

ALIAS20 =

Date _____

Created by _____

Appendix F

SEL-701-1 Monitor Settings Sheets

MONITOR SETTINGS

General Data

Relay Identifier
Range: 20 Characters — **RID =** _____

Terminal Identifier
Range: 20 Characters — **TID =** _____

Phase (IA, IB, IC) CT Ratio
Range: 1-600 to 10 — **CTR =** _____

Phase CT Secondary Rating
Range: 1 A, 5 A — **ITAP =** _____

Neutral (IN) CT Ratio
Range: 1-6000 to 1 — **CTRN =** _____

Neutral CT Secondary Rating
Range: 1 A, 5 A — **INTAP =** _____

Phase Rotation
Range: ABC, ACB — **PHROT =** _____

Nominal Frequency
Range: 50, 60 Hz — **FNOM =** _____

Date Format
Range: MDY, YMD — **DATE_F =** _____

Demand Meter Time Constant
Range: 5, 10, 15, 30, 60 min — **DTMC =** _____

Phase (VA, VB, VC) VT Ratio *(Hidden if voltages not included)*
Range: 1-6000 to 1 — **PTR =** _____

Phase VT Connection *(Hidden if voltages not included)*
Range: D, Y — **DELTA_Y =** _____

Single Voltage Input *(Hidden if voltages not included)*
Range: Y, N — **SINGLEV =** _____

Thermal Model Elements

Setting Method
Range: OFF, Rating, Generic, User **SETMETH =** _____

Thermal Element Settings when Setting Method = RATING

(Hidden when SETMETH = GENERIC or USER)

Full Load Amps
Range: 1.00–8.00 A; ITAP = 5 A
0.20–1.60 A; ITAP = 1 A **FLA =** _____

Service Factor
Range: 1.00–1.50 **SF =** _____

Locked Rotor Amps
Range: 2.50–80.00 A; ITAP = 5 A
0.50–16.00 A; ITAP = 1 A **LRA =** _____

Hot Locked Rotor Time
Range: 1.0–200.0 s **LRTHOT =** _____

Cold Locked Rotor Time
Range: 1.0–240.0 s **LRTCOLD =** _____

Locked Rotor Trip Time Dial
Range: 0.10–1.50 **TD =** _____

Thermal Element Settings when Setting Method = GENERIC

(Hidden when SETMETH = RATING or USER)

Full Load Amps
Range: 1.00–8.00 A; ITAP = 5 A
0.20–1.60 A; ITAP = 1 A **FLA =** _____

Service Factor
Range: 1.00–1.50 **SF =** _____

Curve Number
Range: 1–45 **CURVE =** _____

Thermal Element Settings when Setting Method = USER

(Hidden when SETMETH = RATING or GENERIC)

Full Load Amps
Range: 1.00–8.00 A; ITAP = 5 A
0.20–1.60 A; ITAP = 1 A **FLA =** _____

Service Factor
Range: 1.00–1.50 **SF =** _____

Time to Trip at 1.05 x FLA
Range: 1.0–6000.0 s, NP **TTT105 =** _____

Time to Trip at 1.10 x FLA
Range: 1.0–6000.0 s, NP **TTT110 =** _____

Time to Trip at 1.20 x FLA
Range: 1.0–6000.0 s, NP **TTT120 =** _____

Time to Trip at 1.30 x FLA
Range: 1.0–6000.0 s, NP **TTT130 =** _____

Time to Trip at 1.40 x FLA
Range: 1.0–6000.0 s, NP
TTT140 = _____

Time to Trip at 1.50 x FLA
Range: 1.0–6000.0 s, NP
TTT150 = _____

Time to Trip at 1.75 x FLA
Range: 1.0–6000.0 s, NP
TTT175 = _____

Time to Trip at 2.00 x FLA
Range: 1.0–6000.0 s
TTT200 = _____

Time to Trip at 2.25 x FLA
Range: 1.0–6000.0 s, NP
TTT225 = _____

Time to Trip at 2.50 x FLA
Range: 1.0–6000.0 s
TTT250 = _____

Time to Trip at 2.75 x FLA
Range: 1.0–6000.0 s, NP
TTT275 = _____

Time to Trip at 3.00 x FLA
Range: 1.0–6000.0 s, NP
TTT300 = _____

Time to Trip at 3.50 x FLA
Range: 1.0–6000.0 s, NP
TTT350 = _____

Time to Trip at 4.00 x FLA
Range: 1.0–6000.0 s, NP
TTT400 = _____

Time to Trip at 4.50 x FLA
Range: 1.0–6000.0 s, NP
TTT450 = _____

Time to Trip at 5.00 x FLA
Range: 1.0–600.0 s, NP
TTT500 = _____

Time to Trip at 5.50 x FLA
Range: 1.0–600.0 s
TTT550 = _____

Time to Trip at 6.00 x FLA
Range: 1.0–600.0 s
TTT600 = _____

Time to Trip at 6.50 x FLA
Range: 1.0–600.0 s
TTT650 = _____

Time to Trip at 7.00 x FLA
Range: 1.0–400.0 s
TTT700 = _____

Time to Trip at 7.50 x FLA
Range: 1.0–450.0 s, NP
TTT750 = _____

Time to Trip at 8.00 x FLA
Range: 1.0–400.0 s, NP
TTT800 = _____

Time to Trip at 8.50 x FLA
Range: 1.0–350.0 s, NP
TTT850 = _____

Time to Trip at 9.00 x FLA
Range: 1.0–300.0 s, NP
TTT900 = _____

Time to Trip at 10.00 x FLA
Range: 1.0–225.0 s, NP
TTT1000 = _____

The balance of Thermal Element Settings are used regardless of setting method.

Thermal Capacity Alarm Pickup
Range: 50%–100% **TCAPU =** _____

Thermal Capacity Used to Start
Range: 20%–100% **TCSTART =** _____

Use Learned Starting Thermal Capacity
Range: Y, N **TCLRNEN =** _____

Motor Stopped Cooling Time
Range: 180–72000 s **COOLTIME =** _____

Use Learned Cooling Time *(Hidden when RTDOPT = NONE)*
Range: Y, N **COOLEN =** _____

Overcurrent (O/C) Elements

(Time-delay settings are hidden when their associated pickup settings = OFF)

Level 1 Phase O/C Pickup
Range: OFF, 0.25–100.00 A; ITAP = 5 A
OFF, 0.05–20.00 A; ITAP = 1 A **50P1P =** _____

Level 1 Phase O/C Time Delay
Range: 0.00–400.00 s **50P1D =** _____

Level 2 Phase O/C Pickup
Range: OFF, 0.25–100.00 A; ITAP = 5 A
OFF, 0.05–20.00 A; ITAP = 1 A **50P2P =** _____

Level 2 Phase O/C Time Delay
Range: 0.00–400.00 s **50P2D =** _____

Level 1 Residual O/C Pickup
Range: OFF, 0.25–100.00 A; ITAP = 5 A
OFF, 0.05–20.00 A; ITAP = 1 A **50G1P =** _____

Level 1 Residual O/C Time Delay
Range: 0.00–400.00 s **50G1D =** _____

Level 2 Residual O/C Pickup
Range: OFF, 0.25–100.00 A; ITAP = 5 A
OFF, 0.05–20.00 A; ITAP = 1 A **50G2P =** _____

Level 2 Residual O/C Time Delay
Range: 0.00–400.00 s **50G2D =** _____

Level 1 Neutral O/C Pickup
Range: OFF, 0.025–10.000 A; INTAP = 5A
OFF, 0.005–2.000 A; INTAP = 1 A **50N1P =** _____

Level 1 Neutral O/C Time Delay
Range: 0.00–400.00 s **50N1D =** _____

Level 2 Neutral O/C Pickup
Range: OFF, 0.025–10.000 A; INTAP = 5 A
OFF, 0.005–2.000 A; INTAP = 1 A **50N2P =** _____

Level 2 Neutral O/C Time Delay
Range: 0.00–400.00 s **50N2D =** _____

Negative-Sequence O/C Pickup
Range: OFF, 0.25–100.00 A; ITAP = 5 A
OFF, 0.05–20.00 A; ITAP = 1 A **50QP =** _____

Negative-Sequence O/C Time Delay
Range: 0.10–400.00 s **50QD =** _____

Jogging Block Element Settings

Maximum Number of Starts per Hour
Range: OFF, 1–15 **MAXSTART =** _____

Minimum Time Between Starts
Range: OFF, 1–150 min **TBSDLY =** _____

Load-Jam Function Settings

Load-Jam Trip Pickup
Range: OFF, 0.5–6.0 pu FLA **LJTPU =** _____

Load-Jam Trip Delay
Range: 0.00–400.0 s **LJTDLY =** _____

Load-Loss Element Settings

(Hidden when voltage option available)

Load-Loss Alarm Threshold
Range: OFF, 30–2000 W; ITAP = 5 A
OFF, 6–400 W; ITAP = 1 A **LLAPU =** _____

(Hidden when LLAPU = OFF)

Load-Loss Trip Threshold
Range: 30–2000 W; ITAP = 5 A
6–400 W; ITAP = 1 A **LLTPU =** _____

Load-Loss Starting Time Delay
Range: 0–15000 s **LLSDLY =** _____

Load-Loss Alarm Time Delay
Range: 0.00–400.00 s **LLADLY =** _____

Load-Loss Trip Time Delay
Range: 0.00–400.00 s **LLTDLY =** _____

(Hidden when voltage option unavailable)

Load-Loss Alarm Threshold
Range: OFF, 0.10–1.00 pu FLA **LLAPU =** _____

Load-Loss Trip Threshold
Range: 0.10–1.00 pu FLA **LLTPU =** _____

Load-Loss Starting Time Delay
Range: 0–15000 s **LLSDLY =** _____

Load-Loss Alarm Time Delay
Range: 0.00–400.00 s **LLADLY =** _____

Load-Loss Trip Time Delay
Range: 0.00–400.00 s **LLTDLY =** _____

Current Unbalance Elements Settings

Current Unbalance Alarm Pickup
Range: OFF, 2%–80% **46UBA =** _____

Current Unbalance Alarm Delay
Range: 0.10–400.00 s **46UBAD =** _____

Current Unbalance Trip Pickup
Range: OFF, 2%–80% **46UBT =** _____

Current Unbalance Trip Delay
Range: 0.10–400.00 s **46UBTD =** _____

Phase Reversal Tripping Setting

Enable Phase Reversal Tripping
Range: Y, N **E47T =** _____

Speed Switch Tripping Time Delay Setting

Speed Switch Trip Time Delay
Range: OFF, 0.50–400.00 s **SPDSDLY =** _____

RTD Configuration Settings

RTD Input Option *(INT is not available if no RTD option)*
Range: INT, EXT, NONE **RTDOPT =** _____

Temperature Preference Setting *(Hidden when RTDOPT = NONE)*
Range: C, F **TMPREF =** _____

RTD Location Settings *(Hidden when RTDOPT = NONE)*

RTD Location
Range: WDG, BRG, AMB, OTH, NONE **RTD1LOC =** _____

RTD Location
Range: WDG, BRG, AMB, OTH, NONE **RTD2LOC =** _____

RTD Location
Range: WDG, BRG, AMB, OTH, NONE **RTD3LOC =** _____

RTD Location
Range: WDG, BRG, AMB, OTH, NONE **RTD4LOC =** _____

RTD Location
Range: WDG, BRG, AMB, OTH, NONE **RTD5LOC =** _____

RTD Location
Range: WDG, BRG, AMB, OTH, NONE **RTD6LOC =** _____

RTD Location
Range: WDG, BRG, AMB, OTH, NONE **RTD7LOC =** _____

RTD Location
Range: WDG, BRG, AMB, OTH, NONE **RTD8LOC =** _____

RTD Location
Range: WDG, BRG, AMB, OTH, NONE **RTD9LOC =** _____

RTD Location
Range: WDG, BRG, AMB, OTH, NONE **RTD10LOC =** _____

RTD Location
Range: WDG, BRG, AMB, OTH, NONE **RTD11LOC =** _____

RTD Location *(Hidden when RTDOPT = INT)*
Range: WDG, BRG, AMB, OTH, NONE **RTD12LOC =** _____

RTD Identifier Settings

(Hidden when RTDXLOC = WDG, BRG, AMB, or NONE

RTD Identifier
Range: 10 Characters **RTD1NAM =** _____

RTD Identifier
Range: 10 Characters **RTD2NAM =** _____

RTD Identifier
Range: 10 Characters **RTD3NAM =** _____

RTD Identifier
Range: 10 Characters **RTD4NAM =** _____

RTD Identifier
Range: 10 Characters **RTD5NAM =** _____

RTD Identifier
Range: 10 Characters **RTD6NAM =** _____

RTD Identifier
Range: 10 Characters **RTD7NAM =** _____

RTD Identifier
Range: 10 Characters **RTD8NAM =** _____

RTD Identifier
Range: 10 Characters **RTD9NAM =** _____

RTD Identifier
Range: 10 Characters **RTD10NAM =** _____

RTD Identifier
Range: 10 Charachers **RTD11NAM =** _____

RTD Identifier
Range: 10 Characters **RTD12NAM =** _____

RTD Type Settings *(Hidden when RTDOPT = NONE)*

RTD Type
Range: PT100, NI100, NI120, CU10 **RTD1TY =** _____

RTD Type
Range: PT100, NI100, NI120, CU10 **RTD2TY =** _____

RTD Type
Range: PT100, NI100, NI120, CU10 **RTD3TY =** _____

RTD Type
Range: PT100, NI100, NI120, CU10 **RTD4TY =** _____

RTD Type
Range: PT100, NI100, NI120, CU10 **RTD5TY =** _____

RTD Type
Range: PT100, NI100, NI120, CU10 **RTD6TY =** _____

RTD Type
Range: PT100, NI100, NI120, CU10 **RTD7TY =** _____

RTD Type
Range: PT100, NI100, NI120, CU10 **RTD8TY =** _____

RTD Type
Range: PT100, NI100, NI120, CU10 **RTD9TY =** _____

RTD Type
Range: PT100, NI100, NI120, CU10 **RTD10TY =** _____

RTD Type
Range: PT100, NI100, NI120, CU10 **RTD11TY =** _____

RTD Type *(Hidden when RTDOPT = INT)*
Range: PT100, NI100, NI120, CU10 **RTD12TY =** _____

RTD Temperature Settings *(Hidden when RTDOPT = NONE)*

RTD Trip Temperature
Range: OFF, 0°–250°C
OFF, 32°–482°F **RTD1T =** _____

RTD Alarm Temperature
Range: OFF, 0°–250°C
OFF, 32°–482°F **RTD1A1 =** _____

RTD Alarm Temperature
Range: OFF, 0°–250°C
OFF, 32°–482°F

RTD1A2 = _____

RTD Alarm Temperature
Range: OFF, 0°–250°C
OFF, 32°–482°F

RTD1A3 = _____

RTD Trip Temperature
Range: OFF, 0°–250°C
OFF, 32°–482°F

RTD2T = _____

RTD Alarm Temperature
Range: OFF, 0°–250°C
OFF, 32°–482°F

RTD2A1 = _____

RTD Alarm Temperature
Range: OFF, 0°–250°C
OFF, 32°–482°F

RTD2A2 = _____

RTD Alarm Temperature
Range: OFF, 0°–250°C
OFF, 32°–482°F

RTD2A3 = _____

RTD Trip Temperature
Range: OFF, 0°–250°C
OFF, 32°–482°F

RTD3T = _____

RTD Alarm Temperature
Range: OFF, 0°–250°C
OFF, 32°–482°F

RTD3A1 = _____

RTD Alarm Temperature
Range: OFF, 0°–250°C
OFF, 32°–482°F

RTD3A2 = _____

RTD Alarm Temperature
Range: OFF, 0°–250°C
OFF, 32°–482°F

RTD3A3 = _____

RTD Trip Temperature
Range: OFF, 0°–250°C
OFF, 32°–482°F

RTD4T = _____

RTD Alarm Temperature
Range: OFF, 0°–250°C
OFF, 32°–482°F

RTD4A1 = _____

RTD Alarm Temperature
Range: OFF, 0°–250°C
OFF, 32°–482°F

RTD4A2 = _____

RTD Alarm Temperature
Range: OFF, 0°–250°C
OFF, 32°–482°F

RTD4A3 = _____

RTD Trip Temperature
Range: OFF, 0°–250°C
OFF, 32°–482°F
RTD5T = _____

RTD Alarm Temperature
Range: OFF, 0°–250°C
OFF, 32°–482°F
RTD5A1 = _____

RTD Alarm Temperature
Range: OFF, 0°–250°C
OFF, 32°–482°F
RTD5A2 = _____

RTD Alarm Temperature
Range: OFF, 0°–250°C
OFF, 32°–482°F
RTD5A3 = _____

RTD Trip Temperature
Range: OFF, 0°–250°C
OFF, 32°–482°F
RTD6T = _____

RTD Alarm Temperature
Range: OFF, 0°–250°C
OFF, 32°–482°F
RTD6A1 = _____

RTD Alarm Temperature
Range: OFF, 0°–250°C
OFF, 32°–482°F
RTD6A2 = _____

RTD Alarm Temperature
Range: OFF, 0°–250°C
OFF, 32°–482°F
RTD6A3 = _____

RTD Trip Temperature
Range: OFF, 0°–250°C
OFF, 32°–482°F
RTD7T = _____

RTD Alarm Temperature
Range: OFF, 0°–250°C
OFF, 32°–482°F
RTD7A1 = _____

RTD Alarm Temperature
Range: OFF, 0°–250°C
OFF, 32°–482°F
RTD7A2 = _____

RTD Alarm Temperature
Range: OFF, 0°–250°C
OFF, 32°–482°F
RTD7A3 = _____

RTD Trip Temperature
Range: OFF, 0°–250°C
OFF, 32°–482°F
RTD8T = _____

RTD Alarm Temperature
Range: OFF, 0°–250°C
OFF, 32°–482°F
RTD8A1 = _____

RTD Alarm Temperature
Range: OFF, 0°–250°C
OFF, 32°–482°F

RTD8A2 = _____

RTD Alarm Temperature
Range: OFF, 0°–250°C
OFF, 32°–482°F

RTD8A3 = _____

RTD Trip Temperature
Range: OFF, 0°–250°C
OFF, 32°–482°F

RTD9T = _____

RTD Alarm Temperature
Range: OFF, 0°–250°C
OFF, 32°–482°F

RTD9A1 = _____

RTD Alarm Temperature
Range: OFF, 0°–250°C
OFF, 32°–482°F

RTD9A2 = _____

RTD Alarm Temperature
Range: OFF, 0°–250°C
OFF, 32°–482°F

RTD9A3 = _____

RTD Trip Temperature
Range: OFF, 0°–250°C
OFF, 32°–482°F

RTD10T = _____

RTD Alarm Temperature
Range: OFF, 0°–250°C
OFF, 32°–482°F

RTD10A1 = _____

RTD Alarm Temperature
Range: OFF, 0°–250°C
OFF, 32°–482°F

RTD10A2 = _____

RTD Alarm Temperature
Range: OFF, 0°–250°C
OFF, 32°–482°F

RTD10A3 = _____

RTD Trip Temperature
Range: OFF, 0°–250°C
OFF, 32°–482°F

RTD11T = _____

RTD Alarm Temperature
Range: OFF, 0°–250°C
OFF, 32°–482°F

RTD11A1 = _____

RTD Alarm Temperature
Range: OFF, 0°–250°C
OFF, 32°–482°F

RTD11A2 = _____

RTD Alarm Temperature
Range: OFF, 0°–250°C
OFF, 32°–482°F

RTD11A3 = _____

RTD Trip Temperature
Range: OFF, 0°–250°C
OFF, 32°–482°F **RTD12T =** _____

RTD Alarm Temperature
Range: OFF, 0°–250°C
OFF, 32°–482°F **RTD12A1 =** _____

RTD Alarm Temperature
Range: OFF, 0°–250°C
OFF, 32°–482°F **RTD12A2 =** _____

RTD Alarm Temperature
Range: OFF, 0°–250°C
OFF, 32°–482°F **RTD12A3 =** _____

Enable Winding Trip Voting
(Hidden if <2 RTD Winding trip temperatures are NOT OFF)
Range: Y, N **EWDGV =** _____

Enable Bearing Trip Voting
(Hidden if <RTD ..... trip temperatures are NOT OFF)
Range: Y, N **EBRGV =** _____

Enable RTD Biasing
(Hidden if no RTDnLOC = AMB, or if all winding RTD trip temperatures are OFF.)
Range: Y, N **RTDBEN =** _____

VOLTAGE-BASED PROTECTION

Undervoltage (U/V) Elements
(Hidden if no voltage option or if DELTA_Y = Y)

Level 1 Phase-Phase U/V Pickup
Range: OFF, 1–300 V **27P1P =** _____

Level 2 Phase-Phase U/V Pickup
Range: OFF, 1–300 V **27P2P =** _____

Overvoltage (O/V) Elements
(Hidden if no voltage option or if DELTA_Y = Y)

Level 1 Phase-Phase O/V Pickup
Range: OFF, 1–300 V **59P1P =** _____

Level 2 Phase-Phase O/V Pickup
Range: OFF, 1–300 V **59P2P =** _____

Undervoltage (U/V) Elements
(Hidden if no voltage option or if DELTA_Y = D)

Level 1 Phase U/V Pickup
Range: OFF, 1–300 V **27P1P =** _____

Level 2 Phase U/V Pickup
Range: OFF, 1–300 V **27P2P =** _____

Overvoltage (O/V) Elements
(Hidden if no voltage option or if DELTA_Y = D)

Level 1 Phase O/V Pickup
Range: OFF, 1–300 V **59P1P =** _____

Level 2 Phase O/V Pickup
Range: OFF, 1–300 V **59P2P =** _____

Residual O/V Pickup *(Hidden if SINGLEV = Y)*
Range: OFF, 1–300 V **59GP =** _____

Reactive Power (VAR) Element Settings
(Hidden if no voltage option)

Negative VAR Alarm Pickup
Range: OFF, 30–2000 VAR; ITAP = 5 A
OFF, 6–400 VAR; ITAP = 1 A **NVARAP =** _____

Positive VAR Alarm Pickup *(Hidden if NVARAP = OFF)*
Range: 30–2000 VAR; ITAP = 5 A
6–400 VAR; ITAP = 1 A **PVARAP =** _____

VAR Alarm Time Delay *(Hidden if NVARAP = OFF)*
Range: 0.00–400.00 s **VARAD =** _____

Negative VAR Trip Pickup
Range: OFF, 30–2000 VAR; ITAP = 5 A
OFF, 6–400 VAR; ITAP = 1 A **NVARTP =** _____

Positive VAR Trip Pickup *(Hidden if NVARTP = OFF)*
Range: 30–2000 VAR; ITAP = 5 A
6–400 VAR; ITAP = 1 A **PVARTP =** _____

VAR Trip Time Delay *(Hidden if NVARTP = OFF)*
Range: 0.00–400.00 s **VARTD =** _____

VAR Element Arming Delay *(Hidden if both NVARAP and NVARTP = OFF)*
Range: 0.00–15000 s **VARDLY =** _____

Underpower Element Settings *(Hidden if no voltage option)*

Phase Underpower Alarm Pickup
Range: OFF, 30–2000 W; ITAP = 5 A
OFF, 6–400 W; ITAP = 1 A **37PAP =** _____

Phase Underpower Alarm Time Delay *(Hidden if 37PAP = OFF)*
Range: 0.00–400.00 s **37PAD =** _____

Phase Underpower Trip Pickup
Range: OFF, 30–2000 W; ITAP = 5 A
OFF, 6–400 W; ITAP = 1 A **37PTP =** *OFF*

Phase Underpower Trip Time Delay *(Hidden if 37PTP = OFF)*
Range: 0.00–400.00 s **37PTD =** _____

Underpower Element Arming Delay *(Hidden if both 37PAP and 37PTP = OFF)*
Range: 0–15000 s **37DLY =** _____

Power Factor Element Settings *(Hidden if no voltage option)*

Power Factor Alarm Leading Pickup
Range: OFF, 0.05–0.99 **55LDAP =** *OFF*

Power Factor Alarm Lagging Pickup *(Hidden if 55LDAP = OFF)*
Range: 0.05–0.99 **55LGAP =** _____

Power Factor Alarm Time Delay *(Hidden if 55LDAP = OFF)*
Range: 0.00–400.00 s **55AD =** _____

Power Factor Trip Leading Pickup
Range: OFF, 0.05–0.99 **55LDTP =** _____

Power Factor Trip Lagging Pickup *(Hidden if 55LDTP = OFF)*
Range: 0.05–0.99 **55LGTP =** _____

Power Factor Trip Time Delay *(Hidden if 55LDTP = OFF)*
Range: 0.00–400.00 s **55TD =** _____

Power Factor Element Arming Delay *(Hidden if both 55LDAP and 55LDTP = OFF)*
Range: 0–15000 s **55DLY =** _____

Frequency Elements Settings *(Hidden if no voltage option)*

Level 1 Pickup
Range: OFF, 20.00–70.00 Hz **81D1P =** _____

Level 1 Time Delay *(Hidden if 81D1P = OFF)*
Range: 0.03–400.00 s **81D1D =** _____

Level 2 Pickup
Range: OFF, 20.00–70.00 Hz **81D2P =** _____

Level 2 Time Delay *(Hidden if 81D2P = OFF)*
Range: 0.03–400.00 s **81D2D =** _____

Level 3 Pickup
Range: OFF, 20.00–70.00 Hz **81D3P =** _____

Level 3 Time Delay *(Hidden if 81D3P = OFF)*
Range: 0.03–400.00 s **81D3D =** _____

OUTPUT CONFIGURATION

Analog Output Settings

Analog Output Signal Type
Range: 0–1 mA, 0–20 mA, 4–20 mA **AOSIG =** _____

Analog Output Parameter
Range: %Load_I Percentage of Full Load Current
%THERM Percentage Thermal Capacity
WDG_RTD Hottest Winding RTD Temperature
BRG_RTD Hottest Bearing RTD Temperature
AVG_I Average Phase Current
MAX_I Maximum Phase Current **AOPARM =** *%LOAD_I*

Analog Output Full Scale Current *(Only shown if AOPARM = AVG_I or MAX_I)*
Range: 0.5–80.0 A; ITAP = 5 A
0.1–16.0 A; ITAP = 1 A **AOFSC =** _____

Front-Panel Display Settings

Front-Panel Timeout
Range: 0–30 min **FP_TO =** _____

Front-Panel Display Brightness
Range: 25%, 50%, 75%, 100% **FPBRITE =** _____

Front-Panel Power Display *(Hidden if no voltage option)*
Range: Y, N **FP_KW =** _____

Front-Panel RTD Display *(Hidden if RTDOPT = NONE)*
Range: Y, N **FP_RTD =** _____

Front-Panel Display Message Settings

Display Messages
Range: 20 Characters; enter NA to null **DM1_1 =** _____

DM1_0 = _____

DM2_1 = _____

DM2_0 = _____

DM3_1 = _____

DM3_0 = _____

DM4_1 = _____

DM4_0 = _____

DM5_1 = _____

DM5_0 = _____

DM6_1 = _____

DM6_0 = _____

Output Contact Settings

Enable TRIP Contact Fail-Safe
Range: Y, N

TRFS = _____

Enable OUT1 Contact Fail-Safe
Range: Y, N

OUT1FS = _____

Enable OUT2 Contact Fail-Safe
Range: Y, N

OUT2FS = _____

Enable OUT3 Contact Fail-Safe
Range: Y, N

OUT3FS = _____

Minimum Trip Duration Time
Range: 0.00–400.00 s

TDURD = _____

Antibackspin Setting

Antibackspin Starting Delay
Range: 0–60 min

ABSDLY = _____

Factory Logic Settings

Use Factory Logic Settings
Range: Y, N

FACTLOG = _____

Front-Panel Display Message Variables *(Hidden if FACTLOG = Y)*

Display Message Variables
Range: SELOGIC Control Equation

DM1 = _____

DM2 = _____

DM3 = _____

DM4 = _____

DM5 = _____

DM6 = _____

Logic Variables *(Hidden if FACTLOG = Y)*

Logic Variable
Range: SELOGIC Control Equation

SV1 = _____

SV2 = _____

SV3 = _____

SV4 = _____

Set/Reset Latch Variables *(Hidden if FACTLOG = Y)*

Latch Variable (1–4)
Range: SELOGIC Control Equation

SET1 = _____

RST1 = _____

SET2 = _____

RST2 = _____

SET3 = _____

RST3 = _____

SET4 = _____

RST4 = _____

Output Variables *(Hidden if FACTLOG = Y)*

Trip Variable
Range: SELOGIC Control Equation

TRIP = _____

Unlatch Trip Variable
Range: SELOGIC Control Equation

ULTRIP = _____

52A Variable
Range: SELOGIC Control Equation

52A = _____

Motor Start Variable
Range: SELOGIC Control Equation

STR = _____

Emergency Restart Variable
Range: SELOGIC Control Equation

EMRSTR = _____

Password Access2 Variable
Range: SELOGIC Control Equation

ACCESS2 = _____

Target Reset Variable
Range: SELOGIC Control Equation

TARR = _____

Event Report Trigger Variable
Range: SELOGIC Control Equation

ER = _____

Output Variables 1–3
Range: SELOGIC Control Equation

OUT1 = _____

OUT2 = _____

OUT3 = _____

LED Logic *(Hidden if FACTLOG = Y)*

Use Factory LED Settings
Range: Y, N

FACTLED = _____

LED Variables 1–7 *(Hidden if FACTLED = Y)*
Range: SELOGIC Control Equation

LED1 = _____

LED2 = _____

LED3 = _____

LED4 = _____

LED5 = _____

LED6 = _____

LED7 = _____

SERIAL PORT SETTINGS (SERIAL PORT COMMAND SET P F OR SET P R)

SET P Serial Port Settings

Protocol *(Hidden, Equal ASCII for Front Port)*
Range: ASCII, MOD **PROTO =** _____

Protocol = ASCII *(Hidden when Protocol = MOD)*

Baud Rate
Range: 300–19200 **SPEED =** _____

Data Bits
Range: 7, 8 **BITS =** _____

Parity
Range: O, E, N **PARITY =** _____

Stop Bits
Range: 1, 2 **STOP =** _____

Timeout
Range: 0–30 min **T_OUT =** _____

Send Auto Messages to Port
Range: Y, N **AUTO =** _____

Enable Hardware Handshaking
Range: Y, N **RTSCTS =** _____

Fast Operate Enable
Range: Y, N **FASTOP =** _____

Protocol = MOD *(Hidden when Protocol = ASCII)*

Baud Rate
Range: 300–19200 **SPEED =** _____

Parity
Range: O, E, N **PARITY =** _____

Modbus® Slave ID
Range: 1–247 **SLAVEID =** _____

SEQUENTIAL EVENTS RECORDER SETTINGS (SET R)

SER Trigger Settings

SER1
Range: 24 Relay Word bits, separated by commas.
Use NA to disable setting.

SER1 = _____

SER2
Range: 24 Relay Word bits, separated by commas.
Use NA to disable setting.

SER2 = _____

SER3
Range: 24 Relay Word bits, separated by commas.
Use NA to disable setting.

SER3 = _____

SER4
Range: 24 Relay Word bits, separated by commas.
Use NA to disable setting.

SER4 = _____

SER Alias Settings

Enable ALIAS Settings
Range: N, 1–20

EALIAS = _____

Alias Settings

(Hidden when EALIAS = N, ALIAS# > EALIAS setting are hidden.)

NOTE: Relay Word bit (space) Alias (space) Asserted text (space) Alias and text strings can each be up to 15 text characters. Asserted and deasserted text strings are not required. Use NA to disable setting.

ALIAS1 = _____

ALIAS2 = _____

ALIAS3 = _____

ALIAS4 = _____

ALIAS5 = _____

ALIAS6 = _____

ALIAS7 = _____

ALIAS8 = _____

ALIAS9 = _____

ALIAS10 = _____

ALIAS11 = _____

ALIAS12 = _____

ALIAS13 = _____

ALIAS14 = _____

ALIAS15 = _____

ALIAS16 = _____

ALIAS17 = _____

ALIAS18 = _____

ALIAS19 = _____

ALIAS20 = _____

SEL-701-1 Monitor Command Summary

The table below lists the serial port commands associated with particular activities. All Access Level 1 commands are also available in Access Level 2. The commands are shown in upper-case letters, but can also be entered with lower-case letters.

Access Level	Serial Port Command	Command Description	Page Number
Serial Port Access Commands			
1	HELP	Display available commands	5.10
1	2ACCESS	Go to Access Level 2	5.7
2	ACCESS	Go to Access Level 1	5.7
2	PASSWORD	View/change password	5.20
2	QUIT	Go to Access Level 1	5.21
Relay Self-Test Status Commands			
1	STATUS	Display relay self-test status	5.26
2	STATUS R	Clear self-test status and restart relay	5.27
Relay Clock/Calendar Commands			
1	DATE	View/change date	5.12
1	TIME	View/change time	5.31
Meter Data Commands			
1	METER	Display metering data	5.15
1	METER D	Display demand and peak demand data	5.16
1	METER E	Display energy metering data	5.16
1	METER M	Display max/min metering data	5.17
1	METER T	Display thermal metering data	5.17
1	METER RD	Reset demand ammeter	5.18
1	METER RE	Reset energy metering	5.18
1	METER RM	Reset max/min metering	5.18
1	METER RP	Reset peak demand ammeter	5.18

Continued

Access Level	Serial Port Command	Command Description	Page Number
Event Analysis Commands			
1	EVENT	View event reports	5.13
1	HISTORY	View event summaries/histories	5.13
2	HISTORY R	Reset event history data	5.14
1	SER	View sequential events recorder data	5.21
2	SER R	Reset sequential events recorder data	5.22
1	TARGET	Display relay element status	5.27
1	TARGET R	Reset target LEDs	5.30
1	TRIGGER	Trigger an event report	5.31
Motor Data Commands			
1	LDP	Display load profile data	5.14
1	LDP D	Display load profile buffer size	5.15
2	LDP R	Reset load profile data	5.15
1	MOTOR	Display motor statistics	5.18
2	MOTOR R	Reset motor statistics	5.19
1	MSR	Display motor start reports	5.19
1	MSR F	Display the format of a motor start report	5.19
1	MST	Display motor start trend data	5.19
2	MST R	Reset motor start trend data	5.19
2	RLP	Reset learned motor parameters	5.21
Relay Setting Commands			
1	SHOW	Show/view relay settings	5.24
2	SET	Enter/change relay settings	5.22
Relay Output Control Commands			
2	ANALOG	Test analog output	5.11
2	CON	Control remote bit	5.12
2	PUL	Pulse output contact	5.20
2	STOP	Stop motor	5.27
2	STR	Start motor	5.27

Glossary

A Abbreviation for amps or amperes; units of electrical current magnitude.

Alias User assigned name of a Relay Word bit used in the SEL-701-1 Monitor Sequential Events Recorder (SER) function. The assigned alias appears in the SER report in place of the Relay Word bit, making the SER report easier to review.

Ambient Temperature Temperature of the motor cooling air at the cooling air inlet. Measured by an RTD whose location setting is AMB.

ANSI Standard Device Numbers A list of standard numbers used to represent electrical protection and control relays. The standard device numbers used in this instruction manual include:

- 27 Undervoltage Element
- 37 Underpower Element
- 46 Phase Balance or Current Unbalance Element
- 47 Phase Sequence Element
- 49 Thermal Element
- 50 Overcurrent Element
- 52 AC Circuit Breaker
- 55 Power Factor Element
- 59 Overvoltage Element
- 66 Jogging Device (limits number of operations within a given time of each other)
- 81 Frequency Element

These numbers are frequently used within a suffix letter to further designate their application. The suffix letters used in this instruction manual include:

- P Phase Element
- G Residual/Ground Element
- N Neutral/Ground Element
- Q Negative-Sequence (3I2) Element

Antibackspin Protection Monitor function that prevents the motor from being started for a short time after it is stopped. Used on pump motors to prevent a start attempt while fluid is running backward through the pump.

Antijogging Protection Monitor functions that prevent the motor from being started too many times within an hour (also referred to as Starts Per Hour protection) or too soon following the last start (also referred to as Minimum Time Between Starts protection).

Apparent Power, S Complex power expressed in units of volt-amps (VA), kilovolt-amps (kVA), or megavolt-amps (MVA). Accounts for both real (P) and reactive (Q) power dissipated in a circuit: $S = P + jQ$.

ASCII Abbreviation for American Standard Code for Information Interchange. Defines a standard way to communicate text characters between two electronic devices. The SEL-701-1 Monitor uses ASCII text characters to communicate using its front- and rear-panel EIA-232 serial ports.

Assert To activate; to fulfill the logic or electrical requirements needed to operate a device. To apply a short-circuit or closed contact to an SEL-701-1 Monitor input. To set a logic condition to its true state (logical 1). To close a normally-open output contact. To open a normally-closed output contact.

Breaker Auxiliary Contact A spare electrical contact associated with a circuit breaker that opens or closes to indicate the breaker position. A form-a breaker auxiliary contact (ANSI Standard Device Number 52A) closes when the breaker is closed, opens when the breaker is open. A form-b breaker auxiliary contact (ANSI Standard Device Number 52B) opens when the breaker is closed and closes when the breaker is open.

Checksum A numeric identifier of the firmware in the monitor. Calculated by the result of a mathematic sum of the monitor code.

CID Abbreviation for Checksum Identifier. The checksum of the specific firmware installed in the monitor.

Contiguous Items in sequence; the second immediately following the first.

CR_RAM Abbreviation for Critical RAM. Refers to the area of monitor Random Access Memory (RAM) where the monitor stores mission critical data.

CRC-16 Abbreviation for Cyclical Redundancy Check-16. A mathematical algorithm applied to a block of digital information to produce a unique, identifying number. Used to ensure that the information was received without data corruption.

CT Abbreviation for current transformer.

Current Unbalance Element Protection element that calculates the magnitudes of the measured phase currents, calculates the average of those magnitudes, determines the magnitude with the largest deviation from average. It then calculates the difference between the magnitude average and magnitude of the phase with the largest deviation from the average. Finally, the monitor calculates the percent unbalance current by dividing the difference value by the motor rated full load amps or by the average magnitude, whichever is larger. Unbalance current causes heating in the rotor of the protected motor. The unbalance element can trip the motor in the presence of heavy unbalance to prevent rotor damage due to overheating. In the SEL-701-1 Monitor, this element works together with the motor thermal element which also provides unbalance current protection.

Deassert To deactivate; to remove the logic or electrical requirements needed to operate a device. To remove a short-circuit or closed contact from an SEL-701-1 Monitor input. To clear a logic condition to its false state (logical 0). To open a normally-open output contact. To close a normally-closed output contact.

Delta As used in this instruction manual, a phase-to-phase connection of voltage transformers for electrical measuring purposes. Typically, two voltage transformers are used with one primary lead of the first transformer connected to A-phase and the other lead connected to B-phase. The second voltage transformer is connected to measure the voltage from B-phase to C-phase. When two transformers are used, this connection is frequently called “Open-Delta.”

Demand Meter A measuring function that calculates a rolling average or thermal average of instantaneous measurements over time.

Dropout Time The time measured from the removal of an input signal until the output signal deasserts. The time can be user settable, as in the case of a logic variable timer, or can be a result of the characteristics of an element algorithm, as in the case of an overcurrent element dropout time.

EEPROM Abbreviation for Electrically Erasable Programmable Read-Only Memory. Nonvolatile memory where monitor settings, event reports, SER records, and other nonvolatile data are stored.

Event Report A text-based collection of data stored by the monitor in response to a triggering condition, such as a fault or user command. The data shows monitor measurements before and after the trigger, in addition to the states of protection elements, monitor inputs, and monitor outputs each processing interval. After an electrical system fault, use event reports to analyze monitor and system performance.

Fail-Safe Refers to an output contact that is energized during normal monitor operation and deenergized when monitor power is removed or if the monitor fails.

Fast Meter, Fast Operate Binary serial port commands that the monitor recognizes at its front-and rear-panel EIA-232 serial ports. These commands and the monitor's responses make monitor data collection by a communications processor faster and more efficient than transfer of the same data using formatted ASCII text commands and responses.

FID Monitor firmware identification string. Lists the monitor model, firmware version and datecode, and other information that uniquely identifies the firmware installed in a particular monitor.

Firmware The nonvolatile program stored in the monitor that defines monitor operation.

Flash A type of nonvolatile monitor memory used for storing large blocks of nonvolatile data, such as load profile records.

Fundamental Frequency The component of the measured electrical signal whose frequency is equal to the normal electrical system frequency, usually 50 or 60 Hz. Generally used to differentiate between the normal system frequency and any harmonic frequencies present.

hp Abbreviation for horsepower. 1 hp = 745.7 W.

IA, IB, IC Measured A-, B-, and C-phase currents.

IG Residual current, calculated from the sum of the phase currents. In normal, balanced operation, this current is very small or zero. When a motor ground fault occurs, this current can be large.

IN Neutral current measured by the monitor IN input. The IN input is typically connected to the secondary winding of a window-CT for motor ground fault detection on resistance-grounded systems.

Instantaneous Meter Type of meter data presented by the SEL-701-1 Monitor that includes the present values measured at the monitor ac inputs. The word "Instantaneous" is used to differentiate these values from the measurements presented by the demand, thermal, energy, and other meter types.

Key Switch Contact A type of electrical contact that can only be moved from the open to closed position or back when you insert the appropriate key and rotate the cylinder.

Learned Motor Cooling Time A motor parameter that the SEL-701-1 Monitor can calculate using data collected over time. In order to calculate Learned Motor Cooling Time, the monitor must be connected to measure the temperature of an ambient temperature RTD and at least one RTD embedded in the motor windings. The monitor collects cooling time data for five consecutive motor stops and, if enabled by your settings, uses that cooling time in the thermal model.

Learned Starting Thermal Capacity A motor parameter that the SEL-701-1 Monitor can calculate using data collected over time. In order to calculate Learned Starting Thermal Capacity, the monitor records the percent of thermal model capacity used during each of the last five motor starts.

LED Abbreviation for Light-Emitting Diode. Used as indicator lamps on the monitor front panel.

Load Jam Element A motor protection element that, when enabled, can trip the protected motor if the rotor stops turning due to a sudden increase in load torque or decrease in bus voltage. When the rotor stops, the motor phase current increases. The monitor detects the stopped rotor using a settable overcurrent element and trips after a settable time-delay.

Load Loss Element A motor protection element that, when enabled, can trip the protected motor if the motor shaft is suddenly decoupled from the mechanical load. The monitor detects the sudden decrease in mechanical load using an undercurrent or underpower element.

Load Profile A function that stores selected monitor measurements in nonvolatile memory every 15 minutes. The monitor has enough memory to store at least 30 days of data before it replaces the oldest record with the newest one.

Max/Min Meter Type of meter data presented by the SEL-701-1 Monitor that includes a record of the maximum and minimum of each value, along with the date and time that each maximum and minimum occurred.

Motor Thermal Element A motor protection element that measures motor current, calculates a representation of the energy dissipated in the motor, and compares the present energy estimate to trip thresholds defined by the monitor settings. The output of the motor thermal element is represented as a % Thermal Capacity. When the % Thermal Capacity reaches 100, the monitor trips to protect the motor. The Motor Thermal Element provides motor protection for the following conditions that cause motor overheating: locked rotor, overload operation, and current unbalance.

NEMA Abbreviation for National Electrical Manufacturers Association.

Neutral Overcurrent Element A protection element that causes the monitor to trip when the neutral current magnitude (measured by the IN input) exceeds a user settable value. Used to detect and trip in response to motor or cable ground faults.

Nominal Frequency Normal electrical system frequency, usually 50 or 60 Hz.

Nonfail-Safe Refers to an output contact that is not energized during normal monitor operation. When referred to a trip or stop output contact, the protected motor remains in operation unprotected when monitor power is removed or if the monitor fails.

Nonvolatile Memory Monitor memory that is able to correctly maintain its data even when the monitor is deenergized.

Overfrequency Element A protection element that causes the monitor to trip when the measured electrical system frequency exceeds a user settable frequency.

Phase Reversal Element A protection element that detects the phase rotation of the voltage or current signals applied to the protected motor, and trips if that phase rotation is the opposite of the desired phase rotation.

Phase Rotation The sequence of voltage or current phasors in a multi-phase electrical system. In an ABC phase rotation system, the B-phase voltage lags the A-phase voltage by 120°, and the C-phase voltage lags B-phase voltage by 120°. In an ACB phase rotation system, the C-phase voltage lags the A-phase voltage by 120°, and the B-phase voltage lags the C-phase voltage by 120°.

Pickup Time The time measured from the application of an input signal until the output signal asserts. The time can be user settable, as in the case of a logic variable timer, or can be a result of the characteristics of an element algorithm, as in the case of an overcurrent element pickup time.

Pinout The definition or assignment of each electrical connection at an interface. Typically refers to a cable, connector, or jumper.

Power Factor The cosine of the angle by which phase current lags phase voltage in an ac electrical circuit. Power factor equals 1.0 for power flowing to a resistive load.

PT Abbreviation for potential transformer. Also referred to as a voltage transformer or VT.

RAM Abbreviation for Random Access Memory. Volatile memory where the monitor stores intermediate calculation results, Relay Word bits, and other data that is updated every processing interval.

Reactive Power Element A motor protection element that can trip the protected motor if the measured reactive power exceeds a user settable threshold.

Relay Word The collection of monitor element and logic results. Each element or result is represented by a unique identifier, known as a Relay Word bit.

Relay Word Bit A single monitor element or logic result that the monitor updates once each processing interval. A Relay Word bit can be equal to either logical 1 or logical 0. Logical 1 represents a true logic condition, picked up element, or asserted contact input or contact output. Logical 0 represents a false logic condition, dropped out element, or deasserted contact input or contact output. You can use Relay Word bits in SELOGIC control equations to control monitor tripping, event triggering, and output contacts, as well as other functions.

Remote Bit A Relay Word bit whose state is controlled by serial port commands, including the **CONTROL** command, binary Fast Operate command, or Modbus® command.

Residual Current The sum of the measured phase currents. In normal, balanced operation, this current is very small or zero. When a motor ground fault occurs, this current can be large.

RMS Abbreviation for Root-Mean-Squared. Refers to the effective value of the sinusoidal current and voltage measured by the monitor, accounting for the fundamental frequency and higher order harmonics in the signal.

ROM Abbreviation for Read-Only Memory. Nonvolatile memory where the monitor firmware is stored.

RTD Abbreviation for Resistance Temperature Device. An RTD is made of a metal having a precisely known resistance and temperature coefficient of resistance. The SEL-701-1 Monitor and SEL-2600 RTD Module can measure the resistance of the RTD, and thus, determine the temperature at the RTD location. Typically embedded in the motor windings or attached to the races of bearings.

Self-Test A function that verifies the correct operation of a critical device subsystem and indicates if an out-of-tolerance condition is detected. The SEL-701-1 Monitor is equipped with self-tests that validate the monitor power supply, microprocessor, memory, and other critical systems.

SELOGIC® Control Equation A monitor setting that allows you to control a monitor function (such as an output contact) using a logical combination of monitor element outputs and fixed logic outputs. Logical AND, OR, INVERT, Rising Edge [/], and Falling Edge [\] operators, plus a single level of parentheses are available to use in each control equation setting.

Sequential Events Recorder A monitor function that stores a record of the date and time of each assertion and deassertion of every Relay Word bit in a user settable list. Provides a useful way to determine the order and timing of events following a monitor operation.

SER Abbreviation for Sequential Events Recorder or the monitor serial port command to request a report of the latest 512 sequential events.

Speed Switch An electrical contact that closes to indicate that a motor speed exceeds a certain value.

Terminal Emulation Software Personal computer (PC) software that can be used to send and receive ASCII text messages via the PC serial port, such as Microsoft® Hyperterminal™ or ProComm Plus™.

Underfrequency Element A protection element that causes the monitor to trip when the measured electrical system frequency is less than a user settable frequency.

Underpower Element A protection element that causes the monitor to trip when the measured electrical power consumed by a motor is less than a user settable value.

VA, VB, VC Measured A-, B-, and C-phase-to-neutral voltages.

VAB, VBC, VCA Measured or calculated phase-to-phase voltages.

VFD Abbreviation for Vacuum Fluorescent Display. Used as the monitor front-panel alphanumeric display.

VG Residual voltage calculated from the sum of the three phase-to-neutral voltages, if connected.

VT Abbreviation for voltage transformer. Also referred to as a potential transformer or PT.

Wye As used in this instruction manual, a phase-to-neutral connection of voltage transformers for electrical measuring purposes. Three voltage transformers are used with one primary lead of the first transformer connected to A-phase and the other lead connected to ground. The second and third voltage transformers are connected to measure the voltage from B-phase and C-phase-to-ground, respectively. This connection is frequently called ‘four-wire wye,’ alluding to the three phase leads plus the neutral lead.

This page intentionally left blank

Index

Page numbers appearing in bold mark the location of the topic's primary discussion.

2ACCESS Command **5.11**

ACCESS
- commands **5.11**
  - ACCESS2 **2.17**, **B.29**
- Level 1 **5.7**
- Level 2 **5.7**
  - contact input **2.17**
  - control equation **B.29**
  - front-panel password entry **4.6**
  - password loss **2.17**

Alarm
- ALARM output contact **9.3**
  - wiring diagram 2.14
- counters **7.9**
  - See also Motor Statistics
- protection alarms **3.50**

ANALOG Command **5.11**

Analog Output **2.18**
- functional test **6.15**
- maximum load **2.18**
- settings **3.43**
- wiring diagram **2.18**

AND [*] Operator **B.13**

ANSI Standard Device **GL.1**

Antibackspin Protection **3.48**
- lockout **B.26**

Antijogging Protection **3.24**, GL.2

Apparent Power
- See also Meter
- average running **7.8**
- demand **7.3**
- glossary entry GL.2
- meter **7.2**

ASCII Protocol
- EIA-232 port 2.21

Average Data
- See Motor Statistics

Battery
- See Clock Battery

Breaker Auxiliary Contact
- contact input **2.16**, 2.17
- control equation **B.26**

Chassis Ground
- chassis connection **2.10**
- figure of **2.6**

Clock Battery
- life **9.8**
- replacement **9.8**
- specification **9.8**

Commands
- summary of **5.8**
- 2ACCESS **5.11**
- ACCESS **5.11**
- ANALOG **5.11**
- CONTROL **5.12**
- DATE **5.12**
- EVENT **5.13**
- HELP **5.10**
- HISTORY **5.13**, 8.5
- LDP **5.14**
- METER **5.15**
- MOTOR **5.18**, 7.8
- MSR **5.19**, 7.11
- MST **5.19**, 7.13
- PASSWORD **5.20**
- PULSE **5.20**
- QUIT **5.21**
- RLP **5.21**
- SER **5.21**
- SET 3.2, **5.22**
- SHOW **5.24**
- STATUS **5.26**
- STOP **5.27**
- STR **5.27**
- TARGET **5.27**
- TIME **5.31**
- TRIGGER **5.31**, 8.5

Commissioning Procedure **6.2–6.7**
- connection check **6.3**
- required equipment **6.2**

Communication Cables
EIA-232 2.21, **5.3**
EIA-485 **2.22**
null-modem **5.3**
PC-to-relay cable pinout **5.3**

Compressed ASCII Commands D.18
CASCII **D.20**
CEVENT **D.24**
CHISTORY **D.23**
CME E **D.26**
CME M **D.27**
CME T **D.28**
CSTATUS **D.22**

Contact Inputs 2.16
factory configuration 2.16–2.17
factory logic diagram **3.50**
wetting voltage **2.16**
wiring diagram **2.17**

Contact Outputs 2.13–2.16
control equations **B.33**
deengergized position 2.13
factory configuration 2.15–2.16
factory logic diagram **3.50**
fail-safe operation **2.13**, 2.15
fail-safe settings **3.47**
Modbus control **C.14**
nonfail-safe operation **2.13**, 2.15
wiring diagrams **2.14**, 2.15, 2.16

CONTROL Command 5.12

CT Ratio
selection 2.11
setting **3.1**
setting example **3.4**

Current Unbalance
See also Meter
elements **3.26**
logic diagram **B.37**
percent unbalance equations **3.27**
functional test **6.12**
meter **7.2**
protection
using % unbalance element **3.26**
using overcurrent element **3.24**
using thermal element **3.8**

Current Unbalance Element
glossary entry **GL.3**

Currents
See also Ground CT; Meter
average running **7.8**
connections
ground/neutral 2.11
phase 2.10
demand **7.3**
starting **7.11**, 7.13
wiring diagrams
phase 2.7, 2.8
residual IN 2.8

Cut & Drill Dimensions
See Dimensions, cut & drill

DATE command 5.12

Demand Meter 7.3
See also Meter, demand
front-panel function **4.16**
glossary entry **GL.3**
serial port command **5.16**
time constant setting, DMTC **3.5**

Diagrams
front panel **4.1**, 4.4
installation/mechanical
cut & drill dimensions 2.3
ground CT placement 2.12
mechanical dimensions **2.2**
mounting **2.4**
rear panel **2.5**
side panel **2.6**
logic
current unbalance elements **B.37**
factory contact inputs **3.50**
factory contact outputs **3.50**
factory event triggering **3.51**
factory tripping **3.49**
frequency elements **B.43**
load jam elements **B.44**
load loss **B.44**, **B.45**
overcurrent elements **B.39**
overvoltage elements **B.41**
phase reversal **B.38**
power factor elements **B.40**
reactive power elements **B.46**
speed switch **B.46**
start logic **B.27**
stop/trip logic **B.25**
underpower elements **B.36**

undervoltage elements **B.36**
phase rotation **3.5**
wiring
analog output **2.18**
delta voltages 2.8
EIA-485 serial port **2.23**
factory default
contact input 2.17
contact output 2.14
four-wire wye voltages 2.7
ground CT 2.7
motor starting 2.16
residual IN connection 2.8
RTD inputs 2.20
single phase-to-neutral voltage 2.9
single phase-to-phase voltage 2.9
test connections 6.9, 6.10
trip contact failsafe 2.15

Dimensions
cut & drill **2.3**
mechanical **2.2**

Direct Trip
contact input **2.17**

Display Message
control equations **B.20**
default display **4.2**
settings 3.45

EIA-232 Port
See Serial Port, EIA-232

EIA-485 Port
See Serial Port, EIA-485

Emergency Restart
contact input **2.17**
front-panel function **4.9**
impact on antibackspin **3.48**
impact on antijogging **3.24**
logic **B.28**

Energy Meter 7.5
front-panel function **4.16**
serial port command **5.16**

EVENT Command 5.13

Event History
See History

Event Report 8.7
clearing the buffer **8.11**
column definitions **8.8**
example **8.15**
factory tripping logic **3.51**
retrieval **8.8**
TRIGGER command **5.31**
trigger control equation **B.32**
triggering conditions **8.7**
unfiltered **8.11**

Event Summary 8.5

Factory Assistance 9.12

Factory Default
contact input
configuration 2.16–2.17
logic diagram **3.50**
wiring diagram **2.17**
contact output
logic diagram **3.50**
wiring diagram **2.14**, 2.16
event triggering **3.51**
settings 3.1, **F.1**
logic settings **B.16**
password **4.7**
tripping logic **3.49**

Fail-Safe
See Contact Outputs

Failure Messages 9.3

Falling-Edge [\] Operator B.13

Fast Binary Messages D.2
See also Fast Operate, Fast Meter
message definitions **D.3**

Fast Meter
A5B9 **D.13**
A5C1 **D.4**
A5C2 **D.10**
A5C3 **D.10**
A5D1 **D.9**
A5D2 **D.12**
A5D3 **D.12**
binary commands **D.2**

Fast Operate
A5CE **D.13**
A5E0 **D.14**
A5E3 **D.15**
binary commands **D.2**
enable setting **3.53**

Firmware Upgrade 9.9
instructions **9.9**

Firmware Versions A.1

Frequency
- measurement 2.21
- meter 7.1
- tracking 2.21

Frequency Elements 3.42
- logic diagram B.43
- overfrequency
  - glossary entry GL.6
- underfrequency
  - glossary entry GL.8

Front Panel
- See also Pushbuttons
- access levels 4.5
- automatic messages 4.3, 8.4
- configuration settings 3.44
- diagram 4.1, 4.4
- display brightness 3.44
- display message settings 3.45
- failure messages 9.3
- function 4.18
- menus 4.4
  - emergency restart 4.9
  - front-panel function 4.16
  - history data 4.17, 8.5
  - main menu 4.8
  - meter values 4.16
  - motor statistics 4.18
  - pulse output contact 4.21
  - reset learned parameters 4.22
  - reset thermal model 4.22
  - reset trip/targets 4.10
  - set relay 4.10
    - front serial port 4.13
    - rear serial port 4.14
    - relay date 4.14
    - relay elements 4.11
    - relay password 4.15
    - relay time 4.15
    - SER function 4.12
  - start motor 4.9
  - status of relay 4.20
  - stop motor 4.9
  - view relay word 4.21
    - See also TARGET Command
- password entry 4.6
- pushbuttons 4.1, 4.5
- removal 9.8
- rotating message display 4.2
- rotating meter display 4.2
- target LEDs 8.2
- timeout 3.44
- trip messages 8.4

Functional Overview B.2

Functional Tests 6.8
- analog output 6.15
- current
  - neutral 6.12
  - phase 6.11
  - unbalance 6.12
- power & power factor 6.20
- RTD accuracy 6.15
- test connections 6.8
- thermal element 6.13

Fuse
- ratings 2.10
- replacement 9.7

Ground CT
- application example 3.23
- placement 2.12
- wiring diagram 2.7

HELP Command 5.10

History
- command 5.13
- front-panel function 4.17
- history data 8.5
- serial port command 5.13

Installation 2.1–2.24
- See also Commissioning Procedure
- diagram 2.4

Instantaneous Meter 7.2
- front-panel function 4.16
- serial port command 5.15

Jogging Block Elements 3.24

LDP (Load Profile) Command 5.14

Learned Parameters
- cooling time 3.21
- reset using front panel 4.22
- starting thermal capacity 3.20
- view using
  - front panel 5.18, 7.9
  - MOTOR command 5.18, 7.9

LED Logic 3.46

LEUSE B.15

Load Jam Element 3.24
- glossary entry GL.5
- logic diagram B.44

Load Loss Element 3.25
- glossary entry GL.5
- logic diagrams B.44, B.45
- voltage option
  - with 3.26
  - without 3.25

Load Profile 7.7
- LDP command 5.14, 7.7

Lockout Conditions B.26

Logic Diagrams
- See Diagrams, logic

Maintenance
- routine checks 9.1
- self-testing 9.3

Max/Min Meter 7.3
- front-panel function 4.16
- serial port command 5.17

Menus
- See Front Panel, menus

Meter
- apparent power 4.16, 5.15, 5.16, 5.17, 7.2, 7.3
- command 5.15
- current 4.16, 5.16, 5.17, 7.2, 7.3
  - unbalance 4.16, 5.15, 7.2
- demand 4.16, 5.16, 7.3
- energy 4.16, 5.16, 7.5
- frequency 4.16, 5.15, 7.2
- front-panel menu 4.16
- instantaneous 4.16, 5.15, 7.2
- max/min 4.16, 5.17, 7.3
- power 4.16, 5.15, 5.16, 5.17, 7.2, 7.3
- power factor 4.16, 5.15, 7.2
- reactive power 4.16, 5.15, 5.16, 5.17, 7.2, 7.3
- resetting quantities 4.16, 5.18
- RTD 4.16, 5.17, 7.4
- serial port command 5.15
- starts this hour 4.16, 5.17
- temperature 4.16, 5.17, 7.3, 7.4
- thermal 4.16, 5.17, 7.4
- thermal capacity 4.16, 5.17, 7.4
- time since last start 4.16, 5.17, 7.4
- time to thermal trip 4.16, 5.17, 7.4
- voltage 4.16, 5.15, 5.17, 7.2, 7.3

Modbus
- 01h read coil status C.5
- 02h read input status C.6
- 03h read holding registers C.7
- 04h read input registers C.8
- 05h force single coil C.9
- 06h preset single register C.10
- 07h read exception status C.11
- 08h loopback diagnostic C.12
- 10h preset multiple registers C.13
- controlling
  - contact outputs C.14
  - remote bits C.14
- cyclical redundancy check C.4
- EIA-485 port 2.22
- event data C.17
- exception responses C.3
- function codes C.3
- protocol description C.2
- protocol setting 3.52
- self-test status C.16

MOTOR Command 5.18

Motor Example
- 3000 HP 3.9
- 600 HP 3.9
- 800 HP 3.9

Motor Ratings
- cooling time 3.21
- nameplate 3.3

Motor Start Report 7.11
- MSR command 5.19
- start
  - count 7.11
  - data 7.11
- summary data 7.11

Motor Start Trend 7.13
- MST command 5.19

Motor Starts Count
- motor start report 7.11
- motor start trend 7.13
- motor statistics 5.18, 7.8

Motor Statistics 4.18, 7.8
alarm & trip counters 7.9
average & peak data 7.8
front-panel function 7.8
learned parameters 7.9
MOTOR serial port command 5.18, 7.8
operating times 7.8

Motor Thermal Element
See also Thermal Element
glossary entry GL.6

Mounting 2.4
torque spec 2.4

MSR Command 5.19

MST Command 5.19

NOT [!] Operator B.14

Operating Times
See Motor Statistics

OR [+] Operator B.13

Overcurrent Elements 3.22
logic diagram B.39
negative-sequence 3.24
neutral 3.22
application example 3.23
glossary entry GL.6
phase 3.22
residual 3.22, 3.23

Parentheses [()] Operator B.14

Part Number 1.8
creation 1.8

Password
command 5.20
factory default 4.7
front panel
change 4.6, 4.15
entry 4.6, 4.15
serial port command 5.20

Peak Data
See Motor Statistics

Phase Reversal Tripping 3.27
glossary entry GL.6
logic diagram B.38

Phase Rotation
phasor diagram 3.5
setting, PHROT 3.5

Power
See also Meter
average running 7.8
demand 7.3
front-panel display 3.44
functional test 6.20
meter 7.2
underpower element
glossary entry GL.9

Power Factor
See also Meter
elements 3.41
logic diagram B.40
functional test 6.20
meter 7.2

Power Factor Measurement Convention 7.6

Power Measurement Convention 7.6

Power Supply
fuse ratings 2.10
operating range 2.10

Processing Order B.3

PULSE Command 5.20

Pulse Output Contact 4.21
See also PULSE Command

Pushbuttons
activate display 4.2, 4.8
diagram 4.4

QUIT Command 5.21

Reactive Power
average running 7.8
demand 7.3
elements 3.39
element logic diagram B.46
glossary entry GL.7
meter 7.2

Reactive Power Measurement Convention 7.6

Real Power
See Power

Rear Panel
diagram 2.5

Relay Enabled LED
normal operation 4.2

Relay Models 1.4
See also Part Number

Relay Word B.4
table **B.4**
Remote Bits B.34
CONTROL command **5.12**
Modbus control **C.14**
Reset Learned Parameters 4.22
RLP command **5.21**
Reset Meter Values
reset targets **8.3**
serial port commands 5.18
using front panel 4.16
Reset Targets 8.3
Resistance Temperature Device (RTD)
See also Meter
biasing **3.34**
connections **2.18**
failure messages **7.4**
functional test **6.15**
location settings **3.30**
ambient **3.30**
bearing **3.30**
other **3.30**
winding **3.30**
temperature
average **7.8**
display **3.44**
temperature vs. resistance table **3.35**
thermal meter 4.16
trip temperatures **3.32**
trip voting **3.34**
tripping logic **3.49**
type settings **3.31**
available types **3.31**
wiring diagram, relay 2.20
Rising-Edge [/] Operator B.14
RLP Command 5.21
Routine Maintenance
See Maintenance
Running
LED indication **8.3**
Safety Ground
See Chassis Ground
SEL-2600 RTD Module 2.24
contact input 3.28
failure messages **7.4**
fiber-optic connections 2.24
RTD connections 2.24
RTD-based protection **3.29**
update rate 3.28
Self-Testing 9.3
See also STATUS Command; Status of Relay
self-test table **9.3**
SELogic Control Equations B.12
ACCESS2 logic **B.29**
AND [*] operator **B.13**
breaker auxiliary **B.26**
contact output contact **B.33**
display message equations **B.20**
event trigger **B.32**
factory default settings **B.16**
falling-edge [\] operator **B.13**
latch variables **B.22**
LEUSE **B.15**
limitations **B.15**
nondedicated variables **B.21**
NOT [!] operator **B.14**
operators **B.12**
OR [+] operator **B.13**
parentheses [()] operator **B.14**
remote bits **B.34**
rising-edge [/] operator **B.14**
speed switch logic **B.31**
start and emergency restart logic **B.27**
Stop/Trip logic **B.24**
Sequential Events Recorder 3.54, 8.12
alias settings **3.58**, 8.12
clearing the buffer **8.14**
example report **8.17**
front-panel setting entry **4.12**
retrieving reports **8.12**
SER Command **5.21**
SER Report **8.15**
trigger settings **3.54**, 8.12
SER Command 5.21
Serial Number Label 1.10
Serial Ports
EIA-232
access levels **5.7**
automatic messages **5.32**
command summary **5.8**
communication cable **5.3**

connector pinout **5.3**
front panel 4.1
EIA-485 **2.22**
Modbus protocol **C.1**
wiring diagram **2.23**

SET Command **5.22**

Set Relay
SET Command **5.22**
using
front panel **4.10**

Settings
application data **3.3**
calculation 3.1
locked rotor amps **3.8**
See also SELogic Control Equations
[Settings
aaa]
setting names
27P1P 3.37, **3.38**
27P2P **3.37**, **3.38**
37DLY **3.40**
37PAD **3.40**
37PAP **3.40**
37PTD **3.40**
37PTP **3.40**
46UBA 3.26
46UBAD 3.26
46UBT **3.26**
46UBTD **3.26**
50G1D 3.22
50G1P 3.22
50G2D 3.22
50G2P 3.22
50N1D 3.22
50N1P 3.22
50N2D 3.22
50N2P 3.22
50P1D 3.22
50P1P 3.22
50P2D 3.22
50P2P 3.22
50QD 3.22
50QP 3.22
55AD **3.41**
55DLY **3.41**
55LDAP **3.41**
55LDTP **3.41**
55LGAP **3.41**
55LGTP **3.41**
55TD **3.41**
59GP **3.38**
59P1P **3.37**, **3.38**
59P2P **3.37**, **3.38**
81D1D **3.42**
81D1P **3.42**
81D2D **3.42**
81D2P **3.42**
81D3D **3.42**
81D3P **3.42**
ABSDLY **3.48**
ALIAS1–ALIAS20 **3.59**
AOFSC **3.43**
AOPARM **3.43**
AOSIG **3.43**
AUTO **3.52**
BITS **3.52**
COOLEN **3.21**
COOLTIME **3.21**
CTR 3.4
CTRN 3.4
CURVE **3.11**
DATE_F 3.5, 5.22, 8.14
DELTA_Y 3.6
DM1_1–DM6_0 **3.45**
DMTC 3.5, 7.3
E47T 3.27
EALIAS 3.58, **3.58**
FACTLED **3.46**
FACTLOG **3.48**
FASTOP **3.52**
FLA 3.9, 3.11, **3.16**, 3.25, 7.11, 8.3
FNOM 3.5
FP_KW **3.44**
FP_RTD **3.44**
FP_TO **3.44**
FPBRITE **3.44**
INTAP 3.4
ITAP 3.4
LJTDLY 3.24
LJTPU 3.24
LLADLY 3.25, 3.26
LLAPU 3.25, 3.26
LLSDLY 3.25, 3.26
LLTDLY 3.25, 3.26
LLTPU 3.25, 3.26
LRA **3.9**
LRTCOLD **3.9**

LRTHOT **3.9**
MAXSTART 3.24
NVARAP **3.39**
NVARTP **3.39**
OUT1FS **3.47**
OUT2FS **3.47**
OUT3FS **3.47**
PARITY **3.52**, **3.53**
PHROT 3.5
PROTO **3.52**, **3.53**
PTR 3.6
PVARAP **3.39**
PVARTP **3.39**
RID 3.4, **3.4**
RTD1A1–RTD12A1 **3.32**
RTD1A2–RTD12A2 **3.32**
RTD1A3–RTD12A3 **3.32**
RTD1LOC–RTD12LOC 3.30
RTD1T–RTD12T **3.32**–3.33
RTD1TY–RTD12TY 3.31
RTDOPT 3.29
RTSCTS **3.52**
SER1–SER4 3.54
SETMETH **3.9**, 3.11, **3.16**
SF 3.9, **3.11**, **3.16**
SINGLEV 3.6
SLAVEID **3.53**
SPDSDLY 3.28
SPEED **3.52**, **3.53**
STOP **3.52**
T_OUT **3.52**
TBSDLY 3.24
TCAPU **3.20**
TCLRNEN **3.20**
TCSTART **3.20**
TD **3.9**
TDURD **3.47**, B.24
TID 3.4, **3.4**
TMPREF 3.29
TRFS 3.47
TTT105–TTT1000 **3.16**
VARAD **3.39**
VARDLY **3.39**
VARTD **3.39**
setting prompts
analog output full scale current **3.43**
antibackspin starting delay **3.48**
current unbalance trip pickup **3.26**
date format 5.22, 8.14
demand meter time constant 7.3
enable ALIAS settings **3.58**
full load amps 3.25, 7.11, 8.3
minimum trip duration time B.24
phase rotation 3.5
relay identifier **3.4**
terminal identifier **3.4**
thermal capacity alarm pickup **3.20**
use factory logic settings **3.48**
VAR alarm time delay **3.39**

Short Circuit
See Overcurrent Elements

SHOW Command 5.24

Side Panel
diagrams **2.6**

Specifications 1.11

Speed Switch
contact input **2.17**, 2.17
control equation **B.31**
logic diagram **B.46**
tripping function **3.28**

Start Motor
front-panel function **4.9**
logic **B.27**
STR command **5.27**

Starting
See also Motor Start Report; Motor Start Trend
current **7.11**
average **7.8**
LED indication **8.3**
minimum voltage **7.11**
average **7.8**
thermal capacity **7.11**
time **7.11**
average **7.8**

Starts Per Hour 3.24
lockout **B.26**
meter 4.16, 5.17, **7.4**
protection **3.24**

STATUS Command 5.26

Status of Relay
See also STATUS Command
front-panel function **4.20**

STOP Command 5.27

Stop Motor
- front-panel function 4.9
- STOP command 5.27

Stopped
- LED indication 8.3

STR Command 5.27

TARGET Command 5.27

Target LEDs
- definitions 8.2
- diagram 4.1
- reset
  - See Target Reset

Target Reset
- front-panel function 4.10
- reset targets 8.3

Temperature
- See also Resistance Temperature Device (RTD)
- self-test 3.52

Terminal Emulation
- default configuration 5.5
- other programs 5.2

Test Signals
- connection check 6.4–6.5

Thermal & RTD Meter 7.4
- front-panel function 4.16
- serial port command 5.17

% Thermal Capacity
- analog output 3.43
- interpreting values E.12
- RTD 3.35
- thermal element 3.8

Thermal Capacity
- See also % Thermal Capacity
- alarm setting 3.20
- average & peak values 7.8
- learned starting 3.20
- meter 4.16, 5.17, 7.4
- required to start 3.20, E.13
- RTD % thermal capacity 3.35
- starting 7.11, 7.13

Thermal Element 3.8–3.21
- alarm 3.20
- front-panel reset 4.22
- functional test 6.13
- generic curves, figure 3.13
- generic method 3.8, 3.11
- lockout B.26
- motor cooling time 3.21
- rating method 3.8, 3.9
  - example 3.9
- RTD biasing 3.34
- setting examples
  - locked rotor trip time dial 3.10
  - rating method 3.9
  - user method 3.17
- setting methods 3.8
- starting protection E.8, E.9
- theoretical description E.1
- user method 3.8, 3.14
  - example 3.17

Thermal Element Biasing 3.34

Thermal Limit
- 3000 HP motor example 3.18
- generic curves, figure 3.13
- time per curve 3.11

Thermal Model
- See Thermal Element

Thermistors 2.18

Thermocouples 2.18

Time Between Starts
- lockout B.26
- meter 4.16, 5.17, 7.4
- protection 3.24

TIME Command 5.31

Time to Thermal Trip
- meter 4.16, 5.17, 7.4

Torque
- mounting nut spec 2.4

TRIGGER Command 5.31

Trip Contact
- fail-safe operation 3.47
- minimum duration timer 3.47
- wiring diagrams 2.15

Trip Counters 7.9

Trip Logic
- factory default 3.49

Trip Reset
- front-panel function 4.10

Trip Voting 3.34

Troubleshooting Procedure 9.5

Typographic Conventions 1.3

Unbalance Current
See Current, unbalance

Underpower Element 3.40
logic diagram **B.36**

Upgrade
See Firmware Upgrade

View Relay Word
See also TARGET Command

Voltage-Based Protection 3.37
frequency elements **3.42**
overvoltage elements **3.37**
logic diagram **B.41**
power factor elements **3.41**
reactive power (VAR) elements **3.39**
relay models **3.37**
tripping logic **3.49**
underpower elements **3.40**
undervoltage elements **3.37**
logic diagram **B.36**

Voltages
See also Metering
configuration settings **3.6**
connections **2.21**
delta
wiring diagram 2.8
four-wire wye
wiring diagram 2.7
phase-to-neutral voltage elements **3.38**
phase-to-phase voltage elements **3.37**
protection elements **3.37**
single phase-to-neutral
wiring diagram 2.9
single phase-to-phase
wiring diagram 2.9
starting **7.11**, 7.13

Wiring Diagrams
4-wire wye voltages 2.7
contact inputs 2.17
contact output 2.14
delta voltages 2.8
EIA-485 port **2.23**
ground CT 2.7
motor starting 2.16
residual IN connection 2.8
RTD connections, relay 2.20
side panel **2.6**
single phase-to-neutral voltage 2.9
single phase-to-phase voltage 2.9
trip contact 2.15

This page intentionally left blank