INSTRUCTIONS

GEK-7351A

MHO DISTANCE RELAY FOR SHUNT REACTOR PROTECTION

TYPE CEY53A

GENERAL ELECTRIC

CONTENTS

Photos Not Available At This Time

Photos Not Available At This Time

MHO DISTANCE RELAY FOR SHUNT REACTOR PROTECTION

TYPE CEY53A

DESCRIPTION

The type CEY53A relay is a single phase zone one mho distance relay specifically designed for shunt reactor protection. It provides instantaneous protection against turn-to-turn and single phase-to-ground faults. The relay is mounted in a double unit single ended size M1 drawout case and is provided with a target seal-in unit. Three relays are required, one per phase, for each shunt reactor installation.

APPLICATION

The type CEY53A relay is a zone one mho distance relay specifically designed for shunt reactor protection. The external connections are shown in Figure 3. This application shows the reactors connected as an integral part of the transmission line with the relays supplied with line side potential.

When a transmission line having integral shunt reactors is first deenergized, there will be a trapped voltage remaining on the line which will be oscillating at some matural frequency as determined by the total reactance and the line distributed shunt capacitance. The oscillation frequency varies from about 40 to 70 Hz for minimum to maximum reactor compensation respectively. Since the relay would normally receive its potential from line side coupling capacitor potential devices, it would be subjected to these voltage oscillations. If the relay were to develop operating torque and close its contacts under these conditions, it would most likely prevent the successful high speed reclosing of the line.

The relay design is such that its ohmic reach is appreciably shortened at frequencies lower than rated frequency. The curve of Figure 4 shows the mho unit response over a range of 38 to 70 Hz. As the frequency is decreased the mho unit maximum torque angle becomes less lagging and also the diameter of the mho circle decreases. These variations are shown in the curves of Figure 5. The curve of Figure 4 is a composite showing the effect of both of the variations shown in the curves of Figure 5 with an 85 degree angle line as reference.

Shunt reactors designed to be connected to transmission lines will generally begin to saturate at just over rated voltage. The apparent reduction of reactance at elevated voltages must be considered in setting the relay so as to avoid misoperation of the reactor protection on the line overvoltage conditions expected. When the transmission line section and its connected reactor are energized at the zero point in the voltage wave, the reactor inrush current produced will have maximum offset and will saturate the reactor to some degree. Thus the apparent reactance will be reduced. The relay setting must not be so sensitive as to respond to this reduced apparent reactance otherwise line retripping would result.

The sensitivity of the protection for the reactor will depend upon the relay setting and the reactor design. The relay sensitivity will first be limited by the considerations previously discussed so that it will not trip incorrectly on energizing or overvoltage, etc. The resulting setting will determine the degree of protection remaining. However, as one example of turn-to-turn protection, calculations of a particular reactor design indicated that a short circuit involving only 5 percent of the total turns would reduce the apparent impedance of the reactor to approximately 25 percent of its rated value. Thus, fairly good protection coverage is provided.

When the reactor is part of the transmission line, clearing of any reactor faults requires the tripping of a remote line breaker. The external connections of Figure 1 show a 21/X external auxiliary device operated by the CEY53A trip circuit to provide transfer trip keying to accomplish this function.

CALCULATION OF SETTINGS

For the purpose of illustrating relay settings assume a shunt reactor of 100MVAR per phase on a 500 KV system. The reactor rated reactance is therefore:

$$X = \frac{(ELN)^2}{VAR} = \frac{(289)^2 \times 10^6}{100 \times 10^6} = 835 \text{ ohms primary}$$

$$Xsec = Xpri \frac{CT\ Ratio}{PT\ Ratio}$$

Assume CT Ratio = 600/5
PT Ratio = 289,000/120 (line-to-neutral)

Xsec = 41.6 ohms (1 per unit)

Assume maximum short time overvoltage are 1.3 per unit. From the reactor saturation curve determine the current level at this voltage. Assume 1.53 per unit current

$$X \text{ at } 1.3 \text{ pu voltage} = \frac{1.30}{1.53} = 0.85 \text{ pu} - 35.4 \text{ ohms}$$

The reactor apparent impedance under extreme inrush conditions when energizing as discussed under APPLICATION will have to be calculated or determined by test. When this value is known, compare it with the apparent reactance determined under overvoltage conditions as shown above. Using the smaller of the two reactances, reduce this value by a suitable margin of perhaps 10 to 15 percent to determine the required relay reach setting.

Assume the relay to be set for 0.55 pu or 22.9 ohms secondary. For best performance select the highest possible relay basic minimum tap T_B available that can be used for the required setting. For this case, connect the two relay current coils in series as is shown in the external connections of Figure 3. The relay basic minimum taps will now be twice the nameplate value. For example if the nameplate taps are 0.75/1.5/3, connecting the two current coils in series will change these tap values to 1.5/3/6. In this case select the 6 ohm tap. The percent restraint tap T is determined by the following relation

$$T = \frac{100\ T_B \cos(\theta - \phi)}{Z}$$

where θ = reactor angle, assume 90 degrees
ϕ = maximum torque angle of relay, 75 degrees.
Z = desired reach at angle θ

$$T = \frac{100\ (6) \cos 15^\circ}{22.9} = 25 \text{ percent}$$

RATINGS

The type CEY53A relay covered by these instructions is available for 120 volts, 5 amperes, 60 cycle rating. The 1 second rating of the current circuits is 225 amperes per circuit. The basic minimum reach and adjustment ranges of the mho units are given in the table below.

Mho Unit	Basic Min. * Reach ØN ohms	Range Ø-N ohms	Angle of Max. Tor.
Standard	0.75/1.5/3.0	0.75/30	75° Lag
Long Reach	1.5/3.0/6.0	1.5/6s	75° Lag

* The above basic minimum reach taps are for only one current coil connected in the current circuit or for both current coils connected in parallel. If the two current coils are connected in series these basic minimum taps are multiplied by two.

CONTACTS

The contacts of the CEY53 relay will close and carry momentarily 30 amperes D.C. However the circuit breaker trip circuit must be opened by an auxiliary switch contact or other suitable means since the relay contacts have no interrupting rating.

Target and Seal-in Unit

The ratings of the target seal-in unit is shown below.

	2 Amp Tap	0.2 Amp Tap
Carry tripping duty	30 amps	3 amps
Carry continuously	3 amps	0.3 amps
D.C. resistance	0.13	7 ohms
Impedance (60 cycles)	0.53 ohms	52 ohms

CONSTRUCTION

The Type CEY53 relays are assembled in the medium size single ended (M1) drawout case having studs at one end in the rear for external connections. The electrical connections between the relay and case studs are through stationary molded inner and outer blocks between which nests a removable connecting plug. The outer blocks have the terminals for the internal connections.

Every circuit in the drawout case has an auxiliary brush, as shown in fig. 6 , to provide adequate overlap when the connecting plug is withdrawn or inserted. Some circuits are equipped with shorting bars (see internal connections in Fig. 7 , and on those circuits, it is especially important that the auxiliary brush make contact as indicated in Fig. 6 with adequate pressure to prevent the opening of important interlocking circuits.

The relay mechanism is mounted in a steel framework called the cradle and is a complete unit with all leads terminated at the inner blocks. This cradle is held firmly in the case with a latch at both top and bottom and by a guide pin at the back of the case. The connecting plug, besides making the electrical connections between the respective blocks of the cradle and case, also locks the latch in place. The cover, which is drawn to the case by thumbscrews, holds the connecting plugs in place. The target reset mechanism is a part of the cover assembly.

The relay case is suitable for either semiflush or surface mounting on all panels up to 2 inches thick and appropriate hardware is available. However, panel thickness must be indicated on the relay order to insure that proper hardware will be included. Outline and panel drilling is shown in Fig. 8.

A separate testing plug can be inserted in place of the connecting plug to test the relay in place on the panel either from its own source of current and voltage, or from other sources. Or the relay can be drawn out and replaced by another which has been tested in the laboratory.

Fig. 1 shows the relay removed from its drawout case with all major components identified. Symbols used to identify circuit components are the same as those which appear on the internal connections diagram in figure 7. All adjustments can be made from the front of the relay without removing the relay from its case.

OPERATING PRINCIPLES

The mho unit of the CEY53A relay is of the four pole induction cylinder construction in which torque is produced by the interaction between a polarizing flux and fluxes proportional to the restraining or operating quantities. The method of obtaining the mho characteristics for the unit is described below.

MHO UNIT

The schematic connections of the Mho unit are illustrated in fig. 9. The two side poles, energized by phase-to- neutral voltage, produce the polarizing flux. The flux from the front and rear poles, energized by the difference between the secondary voltage of the transactor TR and a percentage of the same phase-to-neutral voltage, interacts with the polarizing flux to produce torque. The torque equation can be written as follows:

$$\text{Torque} = KE\,(IZ_T - TE)\cos\beta \qquad (1)$$

where:

E = phase-to-neutral voltage (E_1)

I = line current ($I_1 - I_2$)

Z_T = transfer impedance of transactor T_R

K = the inherent design contact

T = Out - transformer tap setting

B = Angle between E and (IZ_T - E).

That this equation (1) defines a mho characteristic can be shown graphically by means of fig. 10. The vector IZ_T at an angle θ determines the basic minimum reach of the unit for a particular tap setting of the transactor TR primary. Assuming finite value of E and (IZ_T - TE), the balance point, torque = 0, will occur where cos B = 0, that is where the angle B is 90°. The locus of the terminus of vector TE (point A in fig. 10) which will cause the angle B to always be 90° is a circle passing through the origin and with the vector IZ_T as a diameter.

Considering further the diagram in fig. 10, we note that the angle B is less than 90° for an internal fault (point C) and the net torque will be in the closing direction (cos B is positive); and that the angle B is greater than 90° for an external fault (point D) and the net torque will be in the opening direction (cos B is negative).

CHARACTERISTICS

IMPEDANCE CHARACTERISTICS

The impedance characteristics of the mho unit is shown in Fig. 11 for the 0.75 ohm basic minimum reach setting at a maximum torque angle of 75°. This circular impedance characteristic can be enlarged that is the unit reach can be increased up to 10/1 by reducing the percentage of the terminal voltage supplied to the taps on the auto transformer. The circle will always pass through the origin and have a diameter along the 75 degree impedance line equal to the ohmic reach of the unit as expressed by the following equation.

$$\text{Ohmic Reach} = \frac{(\text{Input Tap})\ \ Z\ \text{min}}{\text{Unit Tap Setting (\%)}}$$

where:

Input Tap = 100%

Zmin = Basic min. Ø to N ohmic reach of the unit (tap setting)

Unit Tap Setting = Restraint tap lead setting on transformer taps.

DIRECTIONAL ACTION

The mho unit is adjusted to have correct directional action under steady state conditions. For faults in the non-tripping direction, the contacts will remain open between 0 and 60 amperes. For faults in the tripping direction, the unit will close its contact for voltages and current given in the following table:

BASIC MIN. REACH TAP Ø - N	VOLTAGE STUDS 3-4	CURRENT RANGE STUDS 5 AND 8 JUMPER 6 AND 7
0.75 ohms	2.0 volts	6 - 60 Amps
1.5 ohms	2.0 volts	3 - 60 Amps
3.0 ohms	2.0 volts	1.5 - 60 Amps
6.0 ohms	2.0 volts	.75 - 60 Amps

The unit is tested at the factory in the 1.5 ohm tap for correct directional action. A variation of +10% can be expected in the other taps listed above.

UNDERREACH (FIG. 12)

At reduced voltage the ohmic value at which the unit will operate may be somewhat lower than the calculated value. This pullback or reduction unit will operate for all points to the right of the curves.

These curves were determined by tests performed with no voltage applied to the relay before the fault was applied. That is the steady state curve. While the dynamic curves were obtained with full rated voltage appplied to the relay before the fault was applied.

MEMORY ACTION

The dynamic curves of fig. 12 show the effect of memory action in the unit which maintains the polarizing flux for few cycles following the fault. This memory action is particularly effective at low voltage levels of current. The steady state curve shows that the unit will not see a fault at zero percent of the relay setting regardless of the tap setting. Under dynamic conditions when memory action is effective, when I is greater than 2.53 amperes.

TRANSIENT OVERREACH

The operation of the mho unit under transient conditions at the inception of a fault is important because the relay is normally connected so that the MHO contacts will trip a circuit breaker independently of any other contacts. The impedance characteristic of Fig. 11 and the steady-state curves of Fig. 12 represent steady-state conditions. If the fault current contains a D-C transient, the unit may close its contacts momentarily even though the impedance being measured is slightly greater than the calculated steady-state reach. This overreaching tendency will be a maximum when a fault occurs at the one instant in either half-cycle which produces the maximum D-C offset of the current wave. The maximum transient overreach of the MHO unit will not exceed 5 percent of the steady-state reach for line angles up to 85 degrees.

OPERATING TIME

The operating time of the MHO unit is determined by a number of factors such as the basic minimum reach setting of the unit, fault current magnitude, ratio of fault impedance to relay reach, and magnitude of relay voltage prior to the fault. The curves in Fig, 13 are for the condition of rated volts prior to the fault. Time curves are given for four ratios of fault impedance to relay reach setting. In all cases, the MHO taps were in the 100 percent position and the angle of maximum torque was set at 75° lag.

VERNIER ADJUSTMENT FOR LOW TAP SETTINGS

The input leads to the tapped auto-transformer are normally set at 100 percent, but for applications on lines with a high secondary line impedance, where the tap leads would be set at a low percentage, the input connections can be varied by a vernier method to obtain a closer setting.

For example, if the desired first-zone reach is 4.5 ohms and the basic minimum reach setting of the unit is 3 ohms, with the input setting on 100 percent, the tap leads would be:

$$\text{Tap Setting} = \frac{100\ (3)}{4.5} = 66.7 \text{ percent}$$

This desired reach setting can be made within 0.45 percent accuracy by means of the 67 percent tap. However, if the desired firsr zone reach were 28.5 ohms, the output tap setting would be:

$$\frac{100\ (3)}{28.5} = 10.5 \text{ percent}$$

The nearest output tap would be 11 percent which is 4.2 percent off the desired value. To correct this, the input leads can be shifted to 95 percent, in which case, the output would be:

$$\frac{95\ (3)}{28.5} = 10 \text{ percent}$$

BURDENS

CURRENT CIRCUITS

The maximum current burden imposed on each current transformer at 5 amperes and 60 cycles is listed below:

AMPS	CYCLES	R	X	P.F.	W.	VA
5	60	.089	.019	.98	2.22	2.5

This data is for the 3 ohm basic reach tap settings. The burden for the 1.5 and the 0.75 ohm tap setting will be lower.

POTENTIAL CIRCUITS

The maximum potential burden imposed on each potential transformer at 120 volts and 60 cycles is listed below.

CIRCUIT	R	X	P.F.	WATTS	VA
Polarizing	1300	-J680	0.89	8.7	9.8
Restraint	3200	J0	1.0	4.5	4.5

The potential burden of the mho unit is maximum when the restraint tap is set at 100%.

The restraint circuit burden and hence the total burden will decrease when the restraint tap setting is less than 100%.

The potential burden at tap settings less than 100%, can be calculated from the following formula.

$$VA = (a + Jb) \frac{\text{Tap Setting}}{100} + (c + jd)$$

The terms (a + Jb) (c + Jd) represent the burdens of the mho unit potential circuit expressed in watts and vars with their taps on 100%, The values for these terms are as shown below.

CIRCUIT	TERM (WATTS + J VARS)	TERM (WATTS ± J VARS)
RESTRAINT	(a + Jb)	(4.5 + J0)
POLARIZING	(c + Jd)	(8.7 + J 4.5)

MECHANICAL ADJ.

Check Points	Mh Unit
Rotating Shaft End Play	.010 - .015 inch
Contact Gap	.030 - .035 inch
Contact Wipe (N.O. Contacts)	.003 - .005 inch

SERVICING

The phase shifter phase angle meter method of testing the CEY53A relay.

Connect the relay per Figure 14 except (C) to stud 3 (D) to stud 8 and jumper studs 6 and 7.

A. Directional Tests

1. Put the reach taps int he 1.5 ohm position.

2. Set current for 5 amperes and the voltage for 120 volts.

3. Set the phase angle at 285 degrees (75 degrees lag).

4. Reduce the voltage to 0. Vary the current from 0 to 60 amperes, the unit should develop slight opening torque. Adjust the core if this test fails, refer to figure 15. The core can be rotated 360 degrees without having to loosen any part of the assembly. This adjustment is done by using a special core adjusting wrench (Cat. No. 0178A9455 Pt. 1) which fits only octagon nut D in figure 15.

5. Set the voltage to 2.0 volts and current to 3 amperes and adjust the control spring until the unit just closes. Then increase the current to 60 amperes and the contact should remain closed.

SERVICING

B. Reach And Angle Of Maximum Torque.

1. Connect per figure 14 Table 1.
2. Set voltage at 45 volts.
3. Set the restraint taps on 50 percent.
4. Set the reach taps in the 1.5 ohm position.

TABLE I

CONNECT	TO STUD
A	3
B	4
C	5
D	6

TABLE II

CONNECT	TO STUD
A	3
B	4
C	7
D	8

SERVICING

1. Set voltage at 45 volts and current at 15 amperes.
2. Set the phase shifter so that the phase angle meter reads 75 degrees lag (285 degrees lead).
3. Adjust R11 to obtain the reach at 45 volts and 15 amps (14.6 - 15.4) at 75 degrees lag (285 degrees lead).
4. To check the angle of maximum torque, set the phase angle meter 30 degrees either side of the angle of maximum torque and adjust the reactor X-11 to obtain the pickup currents as shown in the table below.

	Ø ∠ METER READINGS			
MHO UNIT	∠ MAX. TOR.	TEST ANGLES	STUD 3-4 VOLTAGE	PICKUP AMPS
Lag ∠	75°	45 and 105°	45 Volts	16.5 - 18.2
Lead ∠	285°	315° and 255°	"	" "

Adjust X-11 until the pickup amps are equal and in limits
As above for both test angles as shown in the chart.

5. Recheck the angle of maximum torque as in para. 3 above. Cross adjust para. 3 and 5 until the relay reach and angle of maximum torque is in limits without any further adjustments.

6. Connect relay per table II of Fig. 14 and check that the reach is within + - 3 percent of the limits as test above in para. 3.

7. Repeat Direction Test (do not adjust control spring).

If core required adjustment, repeat tests.

8. Check of other basic minimum taps as follows:

TAP	PHASE ANGLE SETTING	RESTRAINT TAP	V_{AB}	PICKUP CURRENT
.75	285°	25	45	14.2-15.8
3	285°	100	45	14.2-15.8

Clutch

1. Short No. 1 leads together.
2. Connect per Figure 14 except connect C to 5 and D to 8, jumper 6 to 7.
3. Apply 120 volts and the clutch must slip between 26 and 45 amperes.

TESTING WITH THE X + R EQUIPMENT

PORTABLE TEST EQUIPMENT

To eliminate the errors which may result from instrument inaccuracies and to permit testing the mho units from a single phase A-C test source, the test circuit shown in schematic form in 16 is recommended. S_F is the fault switch, and $R_L + jX_L$ is the impedance of the line section for which the relay is being tested. The autotransformer T_A, which is across the fault switch and line impedance, is tapped in 10 percent and 1 percent steps so that the line impedance $R_L + jX_L$ may be made to appear to the relay very nearly as the actual line on which the relay is to be used. This is necessary since it is not feasible to provide the portable test reactor X_L and the test resistor with enough taps so that the combination may be made to match any line.

For convenience in field testing, the fault switch and tapped autotransformer of Fig. 17 have been arranged in a portable test box, Cat. No. 102L201, which is particularly adapted for testing directional and distance relays. The box is provided with terminals to which the relay current and potential circuits as well as the line and source impedances may be readily connected. For a complete description of the test box the user is referred to GEI-38977.

To check the calibration of the mho units, it is suggested that the portable test box, Cat. No. 102L201; portable test reactor, Cat. No. 6054975; and test resistor, Cat. No. 6158546 be arranged with Type XLA test plugs according to Fig. 17. These connections of the test box and other equipment are similar to the schematic connections shown in Fig. 16 except that the Type XLA test plug connections are now included.

The angle may be checked by using the calibrated test resistor in combination with various reactor taps. The calibrated test resistor taps are pre-set in such a manner that when used with 12 and 6 ohm taps of the specified test reactor, impedance at 75 degrees and 45 degrees respectively will be available for checking the mho unit at the 75 degree and 45 degree positions. The mho unit ohmic reach at the zero degree position may be checked by using the calibrated test resistor alone as the line impedance. The calibrated test resistor is supplied with a data sheet which gives the exact impedance and angle for each of the combinations available. The test-box autotransformer percent tap for pickup at a particular angle is given by:

$$\% \text{ Tap} = \frac{(1.5)\cos(\theta - \emptyset)}{(M \text{ Tap } \%)\, Z_L} \quad (100) \qquad (10)$$

where:

θ = Angle of maximum torque of mho unit

$\emptyset$ = Angle of test impedance Z_L.

Z_L = The 75°, 45°, or 0° impedance value from calibrated test resistor data sheet.

M = Mho Unit restraint tap setting.

ELECTRICAL TESTS

DRAWOUT RELAYS GENERAL

Since all drawout relays in service operate in their case, it is recommended that they be tested in their case or an equivalent steel case. In this way any magnetic effects of the enclosure will be accurately duplicated during testing. A relay may be tested without removing it from the panel by using a 12XLA13A test plug. This plug makes connections only with the relay and does not disturb any shorting bars in the case. Of course, the 12XLA12A test plug may also be used. Although this test plug allows greater testing flexibility, it also requires C.T. shorting jumpers and the exercise of greater care since connections are made to both the relay and the external circuitry.

POWER REQUIREMENTS GENERAL

All alternating current operated devices are affected by frequency. Since non-sinusoidal waveforms can be analyzed as a fundamental frequency plus harmonics of the fundamental frequency, it follows that alternating current devices (relays) will be affected by the applied waveform.

Therefore, in order to properly test alternating current relays it is essential to use a sine wave of current and/or voltage. The purity of the sine wave (i.e. its freedom from harmonics) cannot be expressed as a finite number for any particular relay, however, any relay using tuned circuits, R-L or

RC networks, or saturating electromagnets (such as time overcurrent relays) would be essentially affected by non-sinusoidal wave forms.

Similarly, relays requiring dc control power should be tested using dc and not full wave rectified power. Unless the rectified supply is well filtered, many relays will not operate properly due to the dips in the rectified power. Zener diodes, for example, can turn off during these dips. As a general rule the dc source should not contain more than 5% ripple.

RECEIVING, HANDLING AND STORAGE

These relays, when not included as a part of a control panel, will be shipped in cartons designed to protect them against damage. Immediately upon receipt of a relay, examine it for any damage substained in transit. If injury or damage resulting from rough handling is evident, file a damage claim at once with the transportation company and promptly notify the nearest General Electric Apparatus Sales Office.

Reasonable care should be exercised in unpacking the relay in order that none of the parts are injured or the adjustments disturbed.

If the relays are not to be installed immediately, they should be stored in their original cartons in a place that is free from moisture, dust and metallic chips. Foreign matter collected on the outside of the case may find its way inside when the cover is removed and cause trouble in the operation of the relay.

PERIODIC CHECKS AND ROUTINE MAINTENANCE

In view of the vital role of protective relays in the operation of a power system it is important that a periodic test program be followed. It is recognized that the interval between periodic checks will vary depending upon environment, type of relay and the user's experience with periodic testing. Until the user has accumulated enough experience to select the test interval best suited to his individual requirements it is suggested that the points listed under INSTALLATION PROCEDURE be checked at an interval of from one to two years.

CONTACT CLEANING

For cleaning relay contacts, a flexible burnishing tool should be used. This consists of a flexible strip of metal with an etched-roughened surface resembling in effect a superfine file. The polishing action is so delicate that no scratches are left, yet it will clean off any corrosion throughly and rapidly. Its flexibility insures the cleaning of the actual points of contact. Do not use knives, files, abrasive paper or cloth of any kind to clean relay contacts.

RENEWAL PARTS

It is recommended that sufficient quantities of renewal parts be carried in stock to enable the prompt replacement of any that are worn, broken, or damaged.

When ordering renewal parts, address the nearest Sales Office of the General Electric Company, specify quantity required, name of the part wanted, and the complete model number of the relay for which the part is required.

INSTALLATION PROCEDURE

LOCATION

The location of the relay should be clean and dry, free from dust, excessive heat and vibration, and should be well lighted to facilitate inspection and testing.

MOUNTING

The relay should be mounted on a vertical surface. The outline and panel drilling dimensions are shown in Figure 8.

Immediately upon recepit of the relay, an inspection and acceptance test should be made to insure that no damage has been sustained in shipment and that the relay calibrations have not been disturbed. If the examination or test indicates that readjustment is necessary, refer to the section on Servicing.

VISUAL INSPECTION

Check the nameplate stamping to insure that the model number and rating of the relay agree with the requisition.

Remove the relay from its case and check that there are no broken or cracked molded parts or other signs of physical damage, and that all the screws are tight.

MECHANICAL INSEPCTION

1. Check the mechanical adjustments on page 10.
2. There should not be any noticable friction in the rotating structure of the unit or in the target/seal-in unit.
3. Check the location of contact brushes on the cradle and the brushes and the shorting bars on the case blocks according to the internal connections diagram.

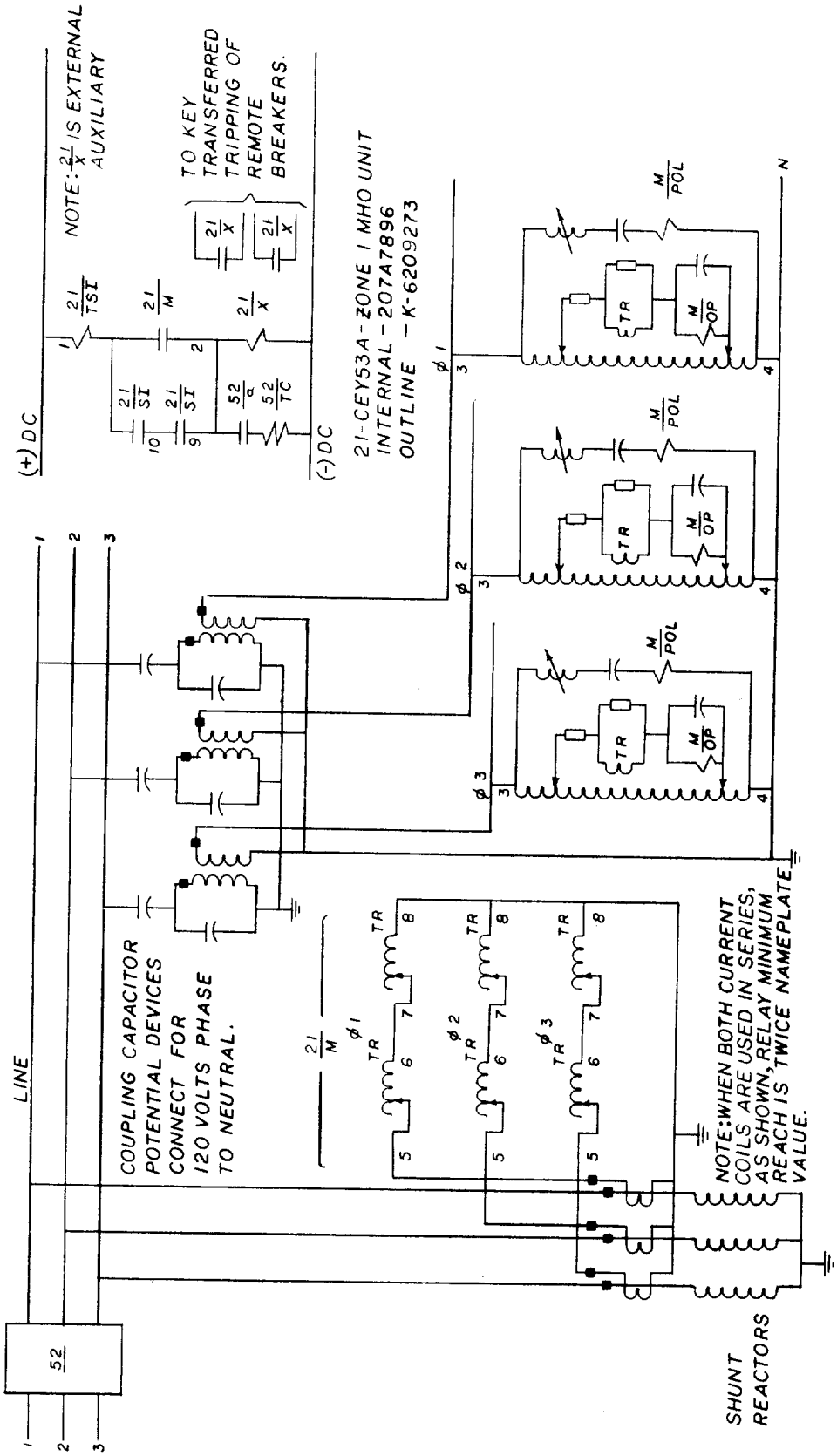

FIG. 3 (0165B2434-0) External Connections Diagram For The CEY53A Relay (For Shunt Reactor Protection)

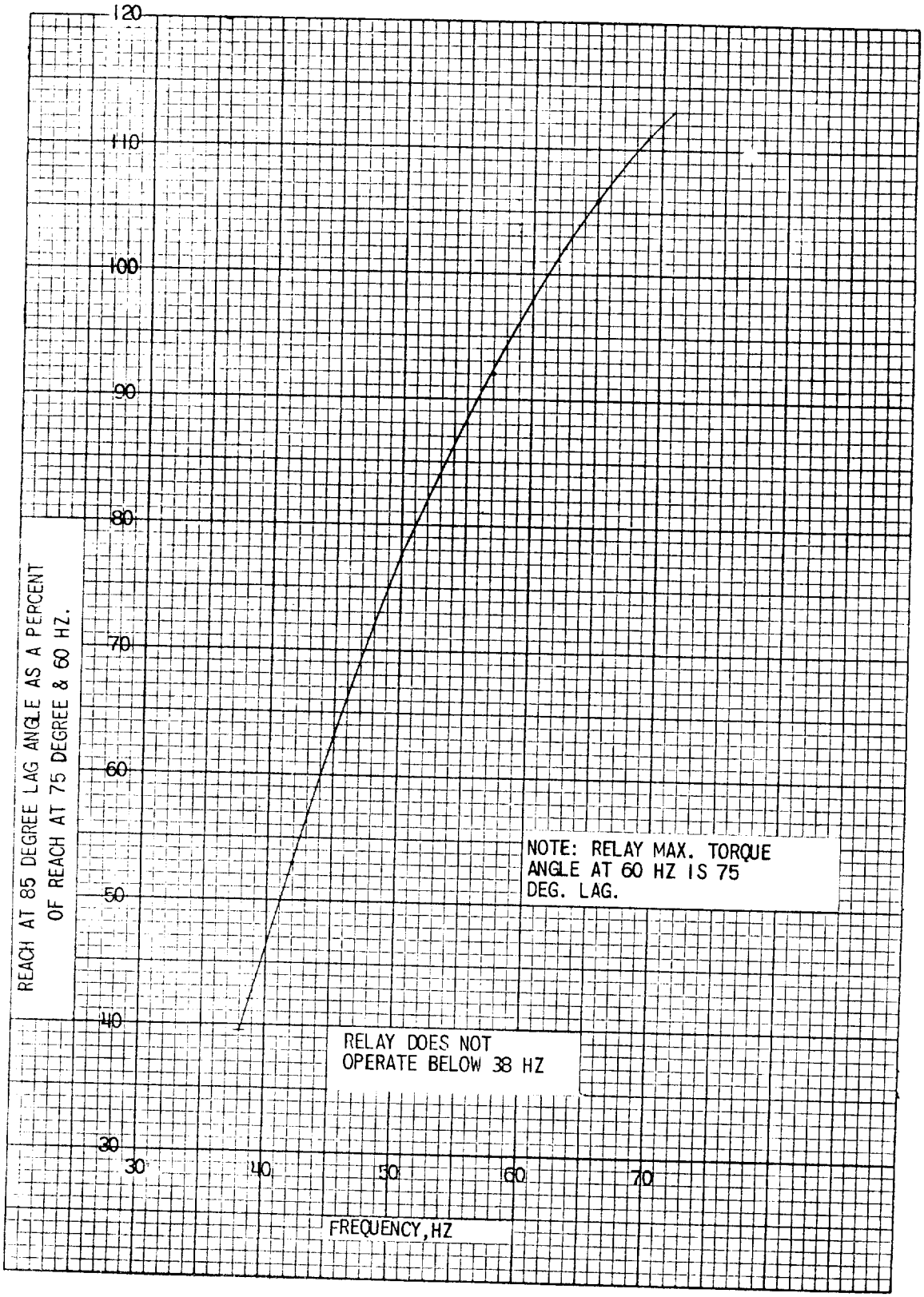

FIG. 4 (0208A3993-0) CEY53A Response Curve Over A Range Of 38 To 70 Hz

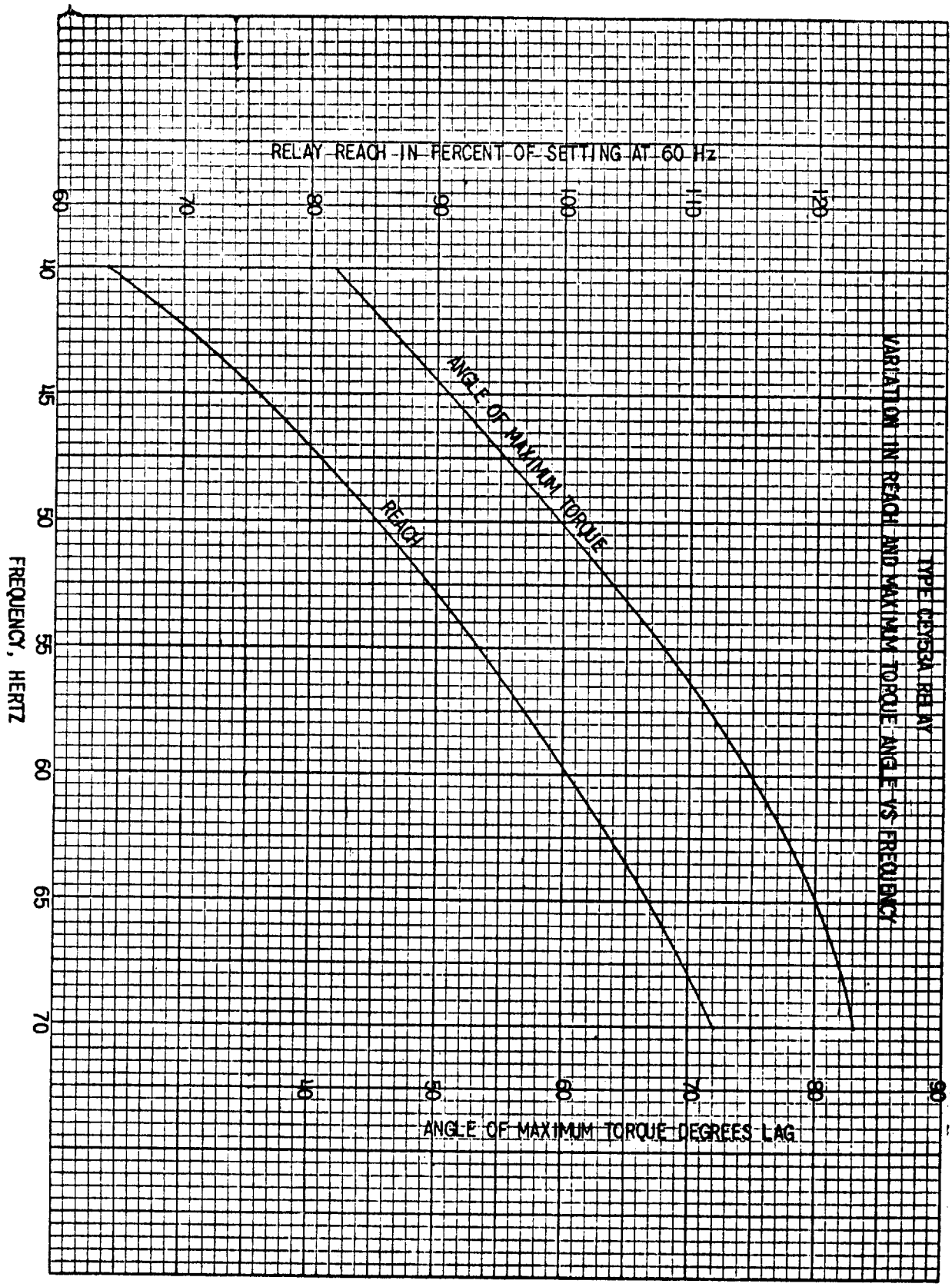

FIG. 5 (0227A2334-0) Variation In Reach And Angle Of Maximum Torque VS. Frequency

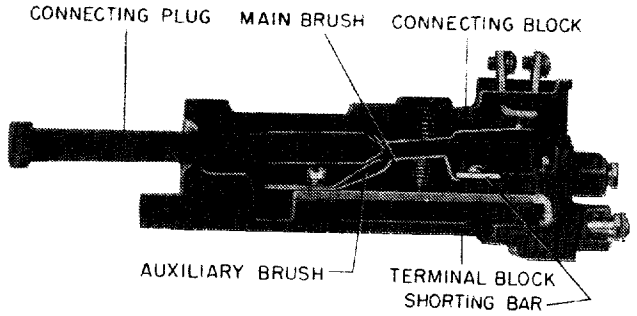

NOTE: AFTER ENGAGING AUXILIARY BRUSH, CONNECTING PLUG TRAVELS 1/4 INCH BEFORE ENGAGING THE MAIN BRUSH ON THE TERMINAL BLOCK

FIG. 6 (8025039) Cross Section Of Case And Cradle Block Showing Location Of Auxiliary Brush

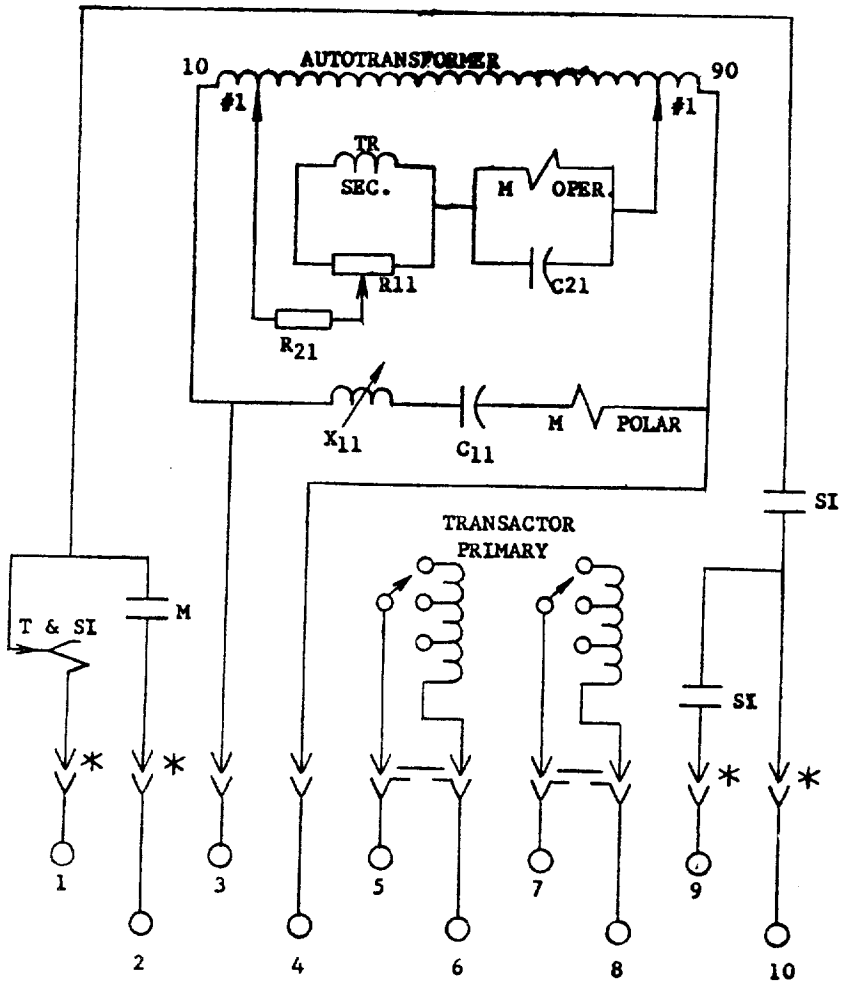

* = SHORT FINGER

FIG. 7 (0207A7896-0) Internal Connections Diagram For The CEY53A Relay (Front View)

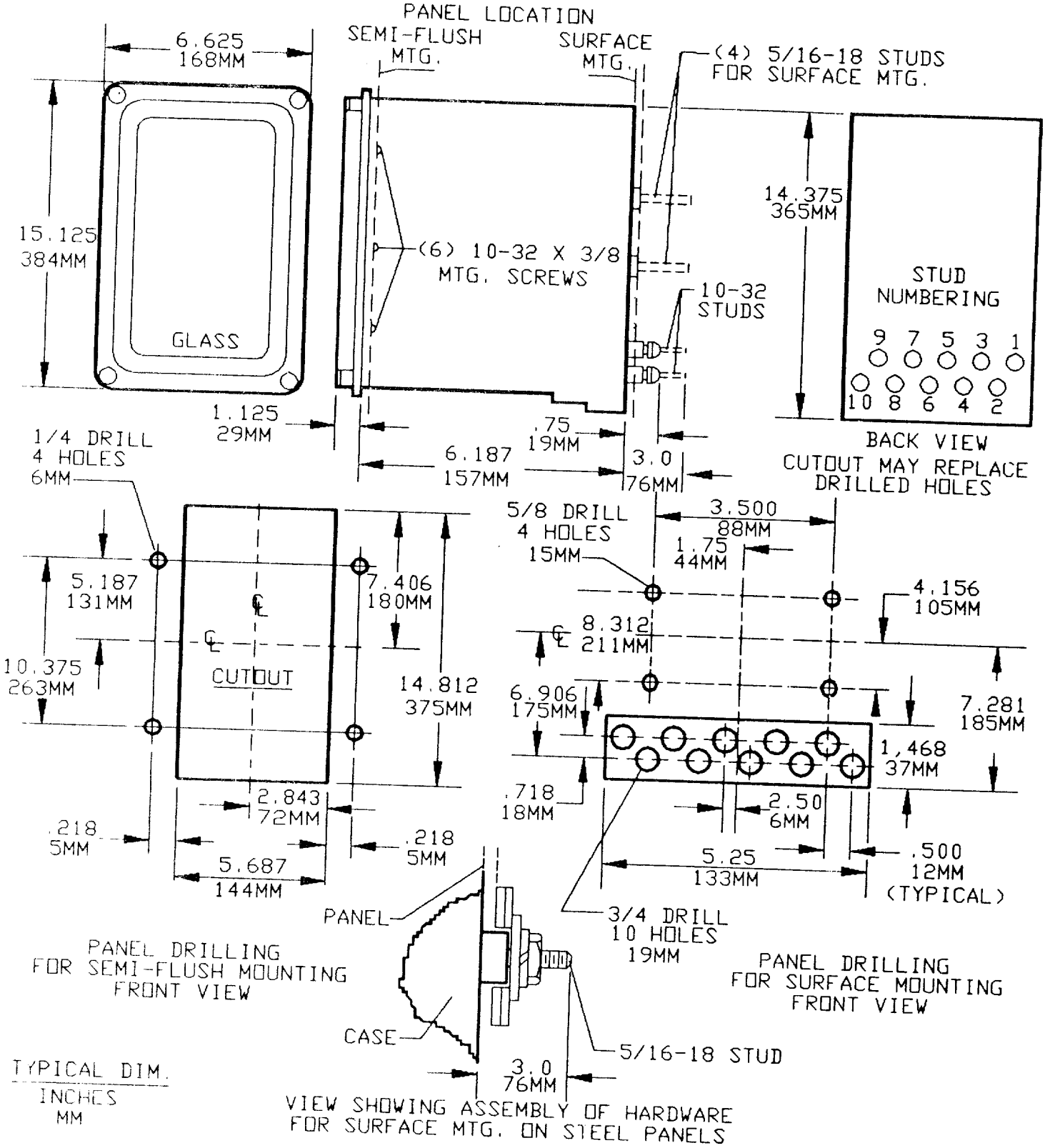

FIG. 8 (6209273 [5]) Outline And Panel Drilling Dimensions For The CEY53A Relay

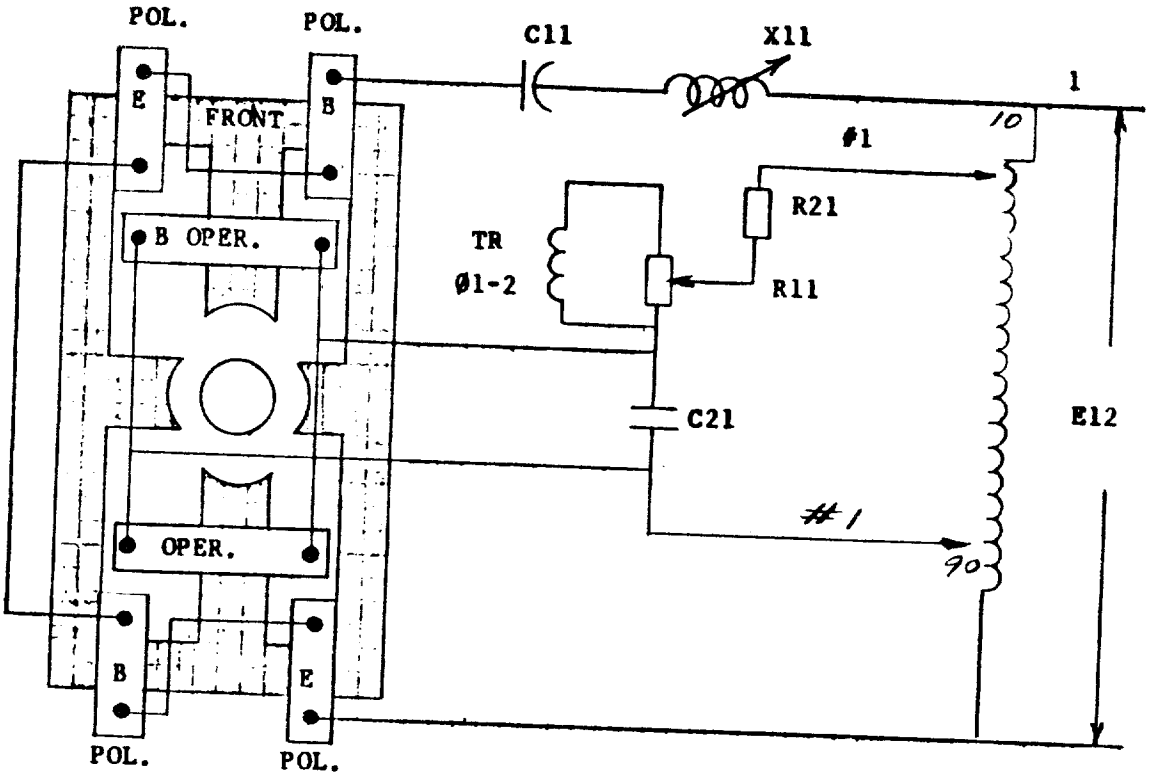

FIG. 9 (0227A2544-0) Schematic Connections Of The Mho Unit In The CEY53A Relay

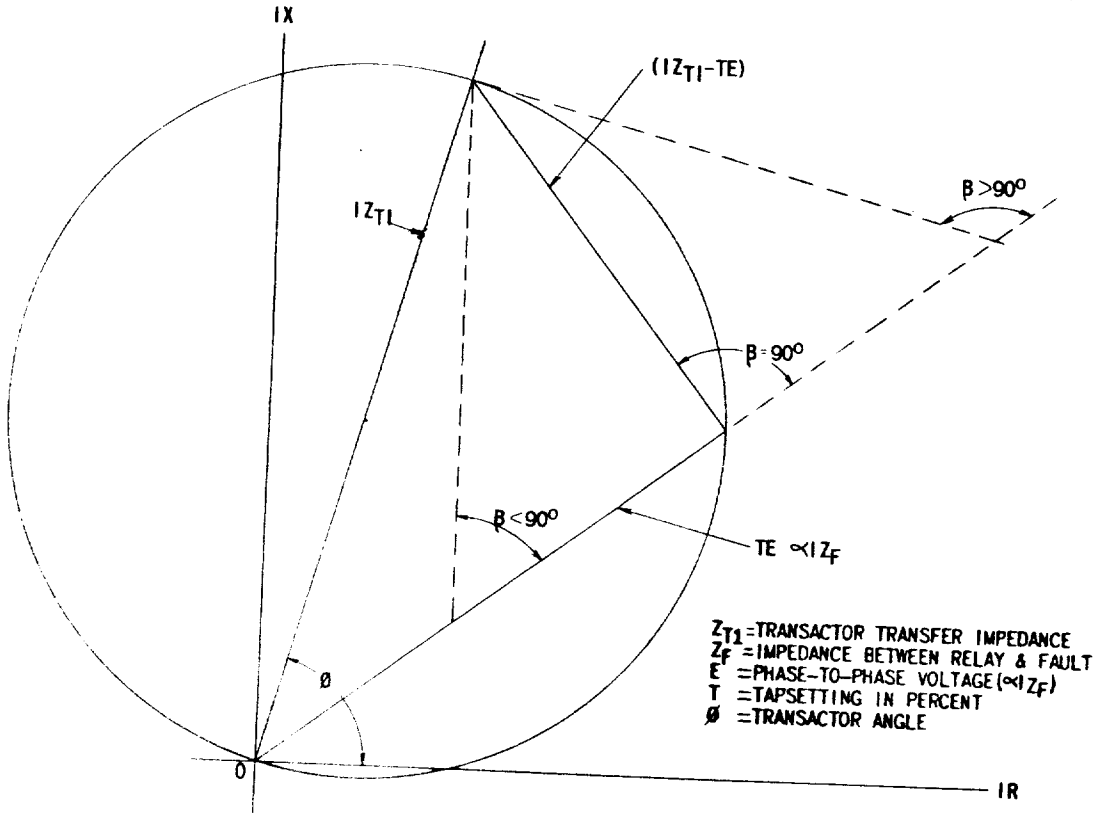

FIG. 10 (0227A2467-1) Graphical Presentation Of Mho Unit Operating Principles

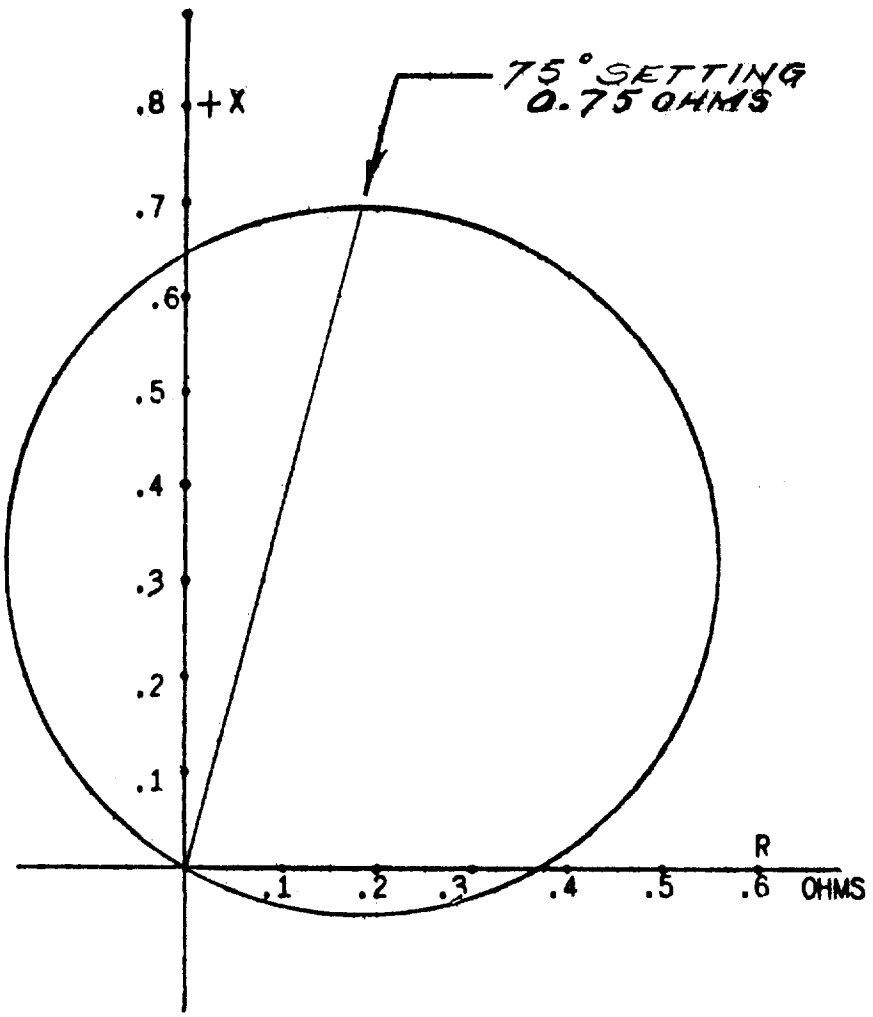

FIG. 11 (0227A2468-0) Steady-State Impedance Characteristic Of Mho Unit In The CEY53A Relay

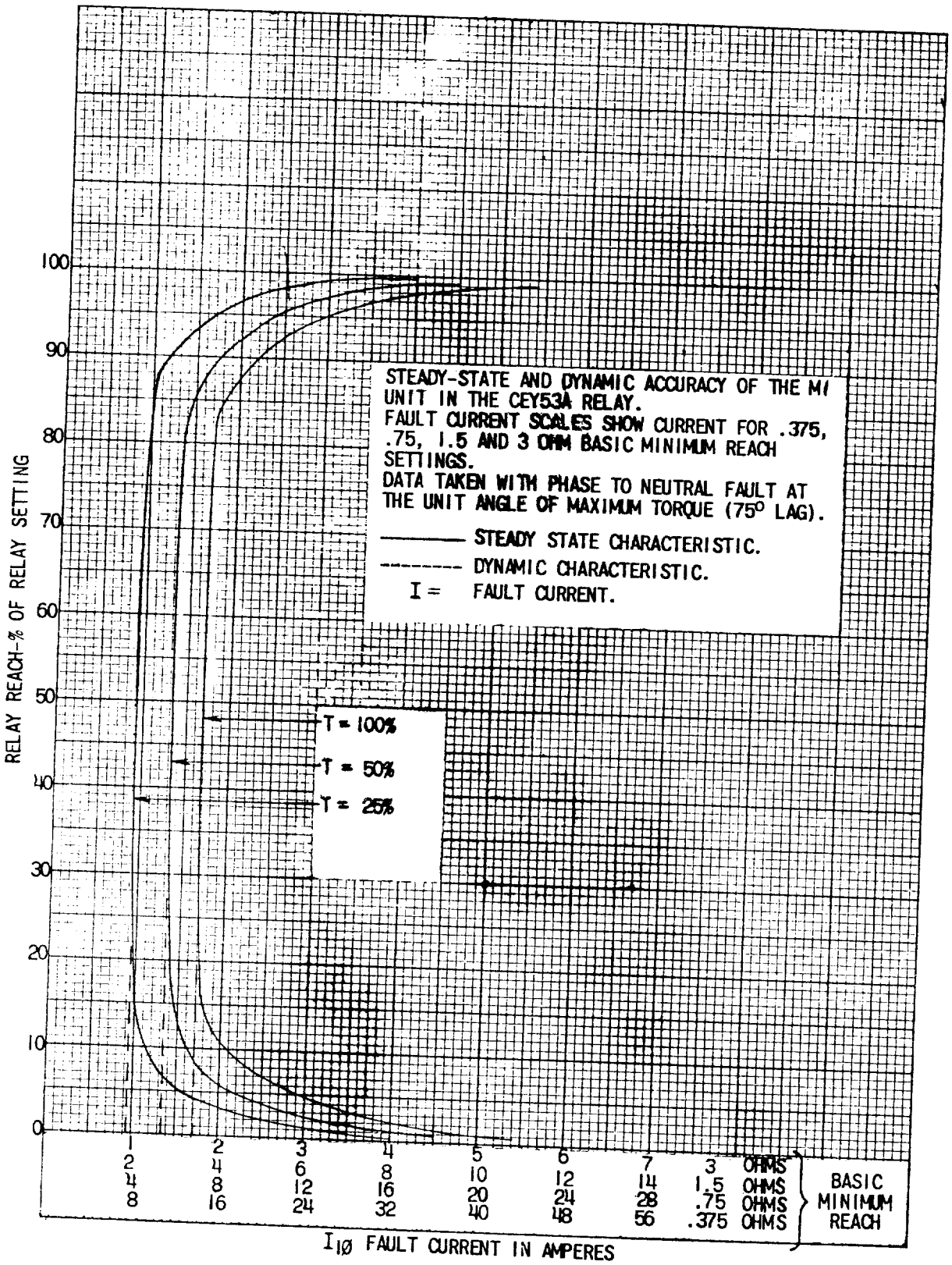

FIG. 12 (0227A2466-2) Steady-State And Dynamic Reach Curves For The CEY53A Relay

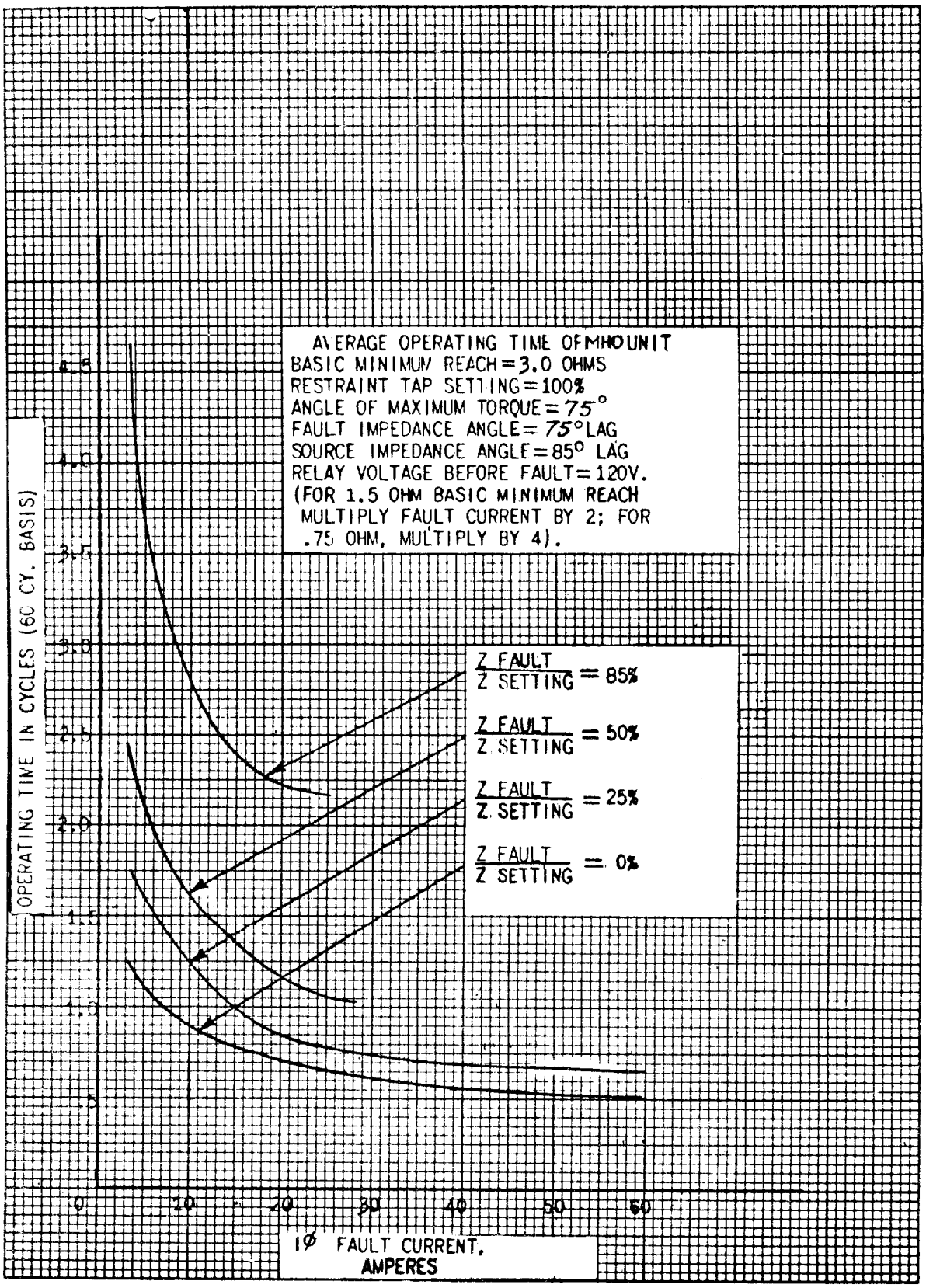

FIG. 13 (0227A2465-0) Operating Time Curves For The CEY53A Relay

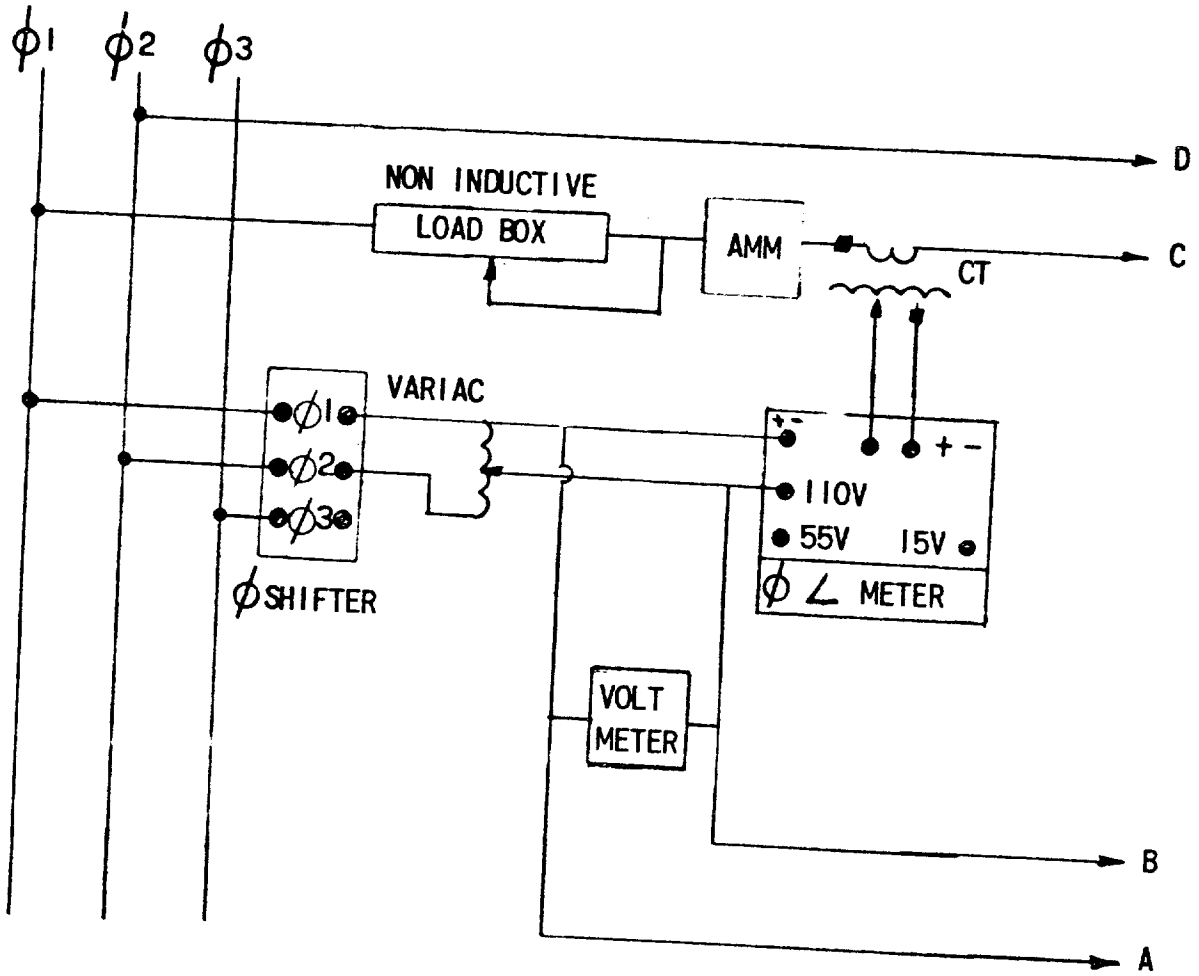

FIG. 14 (0227A8407-0) Test Connections Diagram Using Phase Shifter And Phase Angle Meter

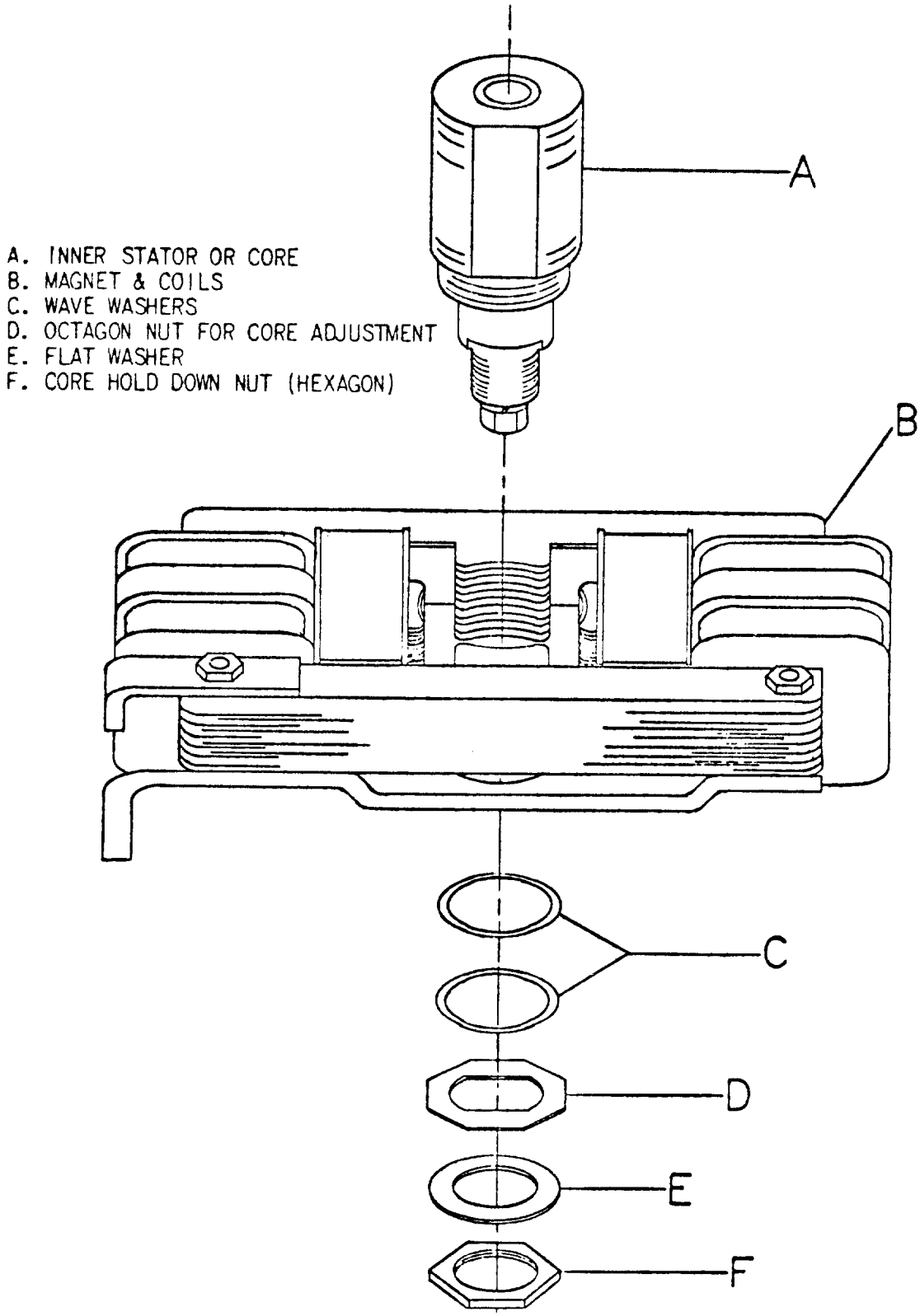

FIG. 15 (0208A3583-0) Core Adjustment

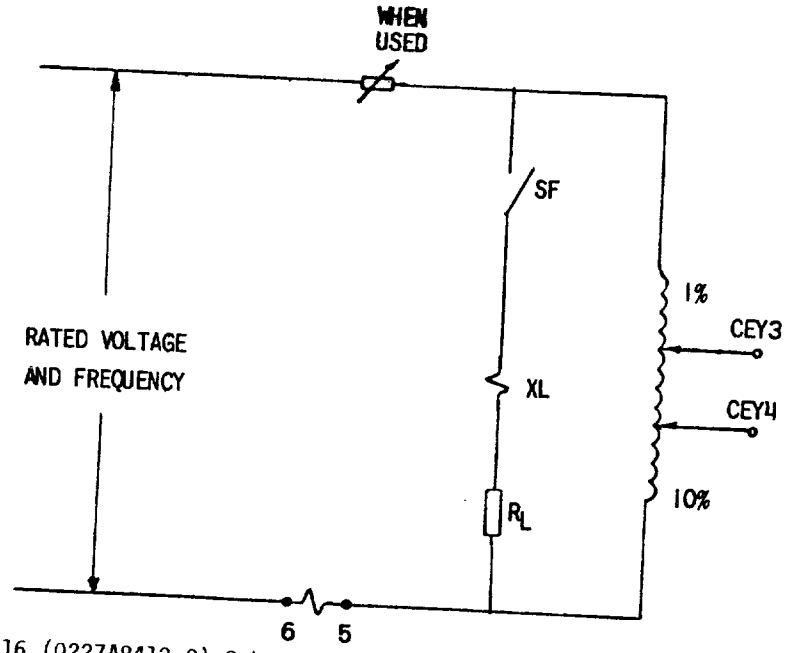

FIG. 16 (0227A8412-0) Schematic Diagram Of The X & R Test Equipment

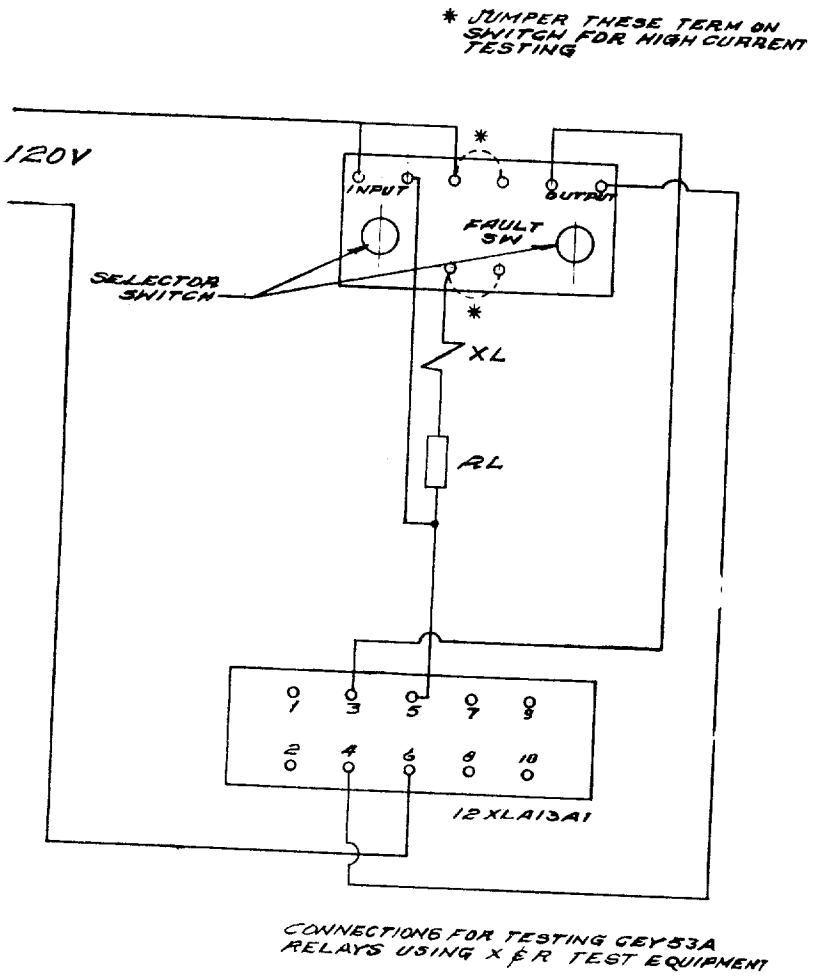

FIG. 17 (0227A2545-0) Connections For Testing The CEY53A Relay With X & R Equipment

GE Power Management

215 Anderson Avenue
Markham, Ontario
Canada L6E 1B3
Tel: (905) 294-6222
Fax: (905) 201-2098
www.ge.com/indsys/pm