INSTRUCTIONS

GEI-33938F

Insert Booklet GEH-1814

VOLTAGE RELAYS

TYPES

IAV71
IAV72
IAV73

GENERAL ELECTRIC

VOLTAGE RELAYS

TYPES IAV 71,72,73

These instructions supplement instruction book GEH-1814 which is included in this book. The combination of the two forms instructions for the IAV71A, IAV71B, IAV72A, IAV72B, IAV72C, IAV73A and IAV73B relays.

APPLICATION

These volage relays are designed primarily for rated frequency operation but are frequency compensated to hold their calibration within five percent of any tap setting over a frequency range of 50 to 150 percent of rated frequency.

The IAV71A relay is an overvoltage relay similar to the IAV51 relay except that it is frequency compensated. The relay has single-circuit closing contacts which close when the voltage increases to the pickup value as set on the tap block. The time voltage characteristics are shown in Fig. 1 of the included instructions.

The IAV71B relay is similar to the IAV71A relay except for the addition of an instantaneous unit. This unit is frequency compensated over a range of 50 to 150 percent of rated frequency. Pickup of this instantaneous unit is determined by the setting of an adjustable rheostat located in the rear of the relay. With the rheostat at maximum resistance, the pickup will be 200 volts or more.

The IAV72A relay is similar to IAV52A relay except that it is frequency compensated.

The IAV73A and IAV73B relays are undervoltage and overvoltage relays similar to the IAV53A and IAV53B relays, respectively, except that they are frequency compensated and are mounted in the single-unit, double-end, drawout case. The double-throw contacts are connected between the upper and lower blocks and the coil is connected to both blocks. The purpose of this is to avoid false tripping of the breaker if the connecting plugs are removed and then replaced when the relay is in the reset position; that is, circuit opening contacts closed. Inserting either plug causes the relay to pick up; however, both plugs must be in place before the contact circuits are completed.

The frequency compensation is accomplished by using wound shading coils in the U magnet assembly and by connecting a resistor and capacitor in parallel across the coils. This is done to keep the magnitude of the operating torque uniform at any tap voltage through the frequency range of 50 to 150 percent of rated frequency.

BURDENS

Burdens for the IAV71A, IAV71B, IAV72A, IAV72B and IAV72C relays are given in the following table:

These instructions do not purport to cover all details or variations in equipment nor to provide for every possible contingency to be met in connection with installation, operation or maintenance. Should further information be desired or should particular problems arise which are not covered sufficiently for the purchaser's purposes, the matter should be referred to the General Electric Company.

To the extent required the products described herein meet applicable ANSI, IEEE and NEMA standards; but no such assurance is given with respect to local codes and ordinances because they vary greatly.

TABLE I

Voltage Rating Tap		60 Cycle Burdens						50 Cycle Burdens					
		At Tap Voltage			At Rated Voltage			At Tap Voltage			At Rated Voltage		
120	240	Watts	VA	PF	Watts	VA	PF	Watts	VA	PF	Watts	VA	PF
140	280	1.0	3.85	0.260	0.78	2.82	0.276	1.20	4.63	0.260	0.936	3.39	0.276
120	240	1.08	3.90	0.276	1.08	3.90	0.276	1.34	4.68	0.276	1.34	4.68	0.276
105	210	1.11	3.84	0.288	1.45	5.05	0.288	1.36	4.65	0.288	1.78	6.11	0.288
93	186	1.15	3.90	0.294	1.92	6.48	0.396	1.38	4.69	0.294	2.30	7.79	0.396
82	164	1.20	3.89	0.308	2.78	8.42	0.331	1.44	4.67	0.308	3.34	10.10	0.331
70	140	1.26	3.92	0.321	3.80	11.90	0.319	1.57	4.88	0.321	4.73	14.81	0.319
64	128	1.31	3.90	0.336	4.75	14.40	0.330	1.57	4.67	0.336	5.69	17.24	0.330
55	110	1.42	3.94	0.360	7.20	20.30	0.354	1.68	4.67	0.360	8.51	24.06	0.354

Burdens for the IAV73A and IAV73B relays are given in the following table:

TABLE II

Voltage Rating	60 CYCLE BURDENS						
	At Tap Voltage				At Rated Voltage		
	Tap	Watts	VA	PF	Watts	VA	PF
115	140	0.94	3.01	0.312	0.69	2.03	0.339
	120	0.98	3.06	0.320	0.89	2.80	0.318
	105	1.00	3.05	0.328	1.14	3.68	0.310
	93	0.97	3.07	0.315	1.51	4.69	0.322
	82	1.03	2.87	0.360	1.90	5.87	0.323
	70	1.05	2.93	0.358	2.68	8.50	0.317
	64	1.07	3.07	0.349	3.25	10.40	0.312
	55	1.12	3.14	0.357	4.79	14.80	0.323

INSTALLATION

MOUNTING

The outline and panel drilling dimensions for the IAV71A and IAV72A relays are shown in Figure 20 of the included instructions. The outline and panel drilling dimensions for the IAV71B, IAV72B and IAV72C relays are shown in Figure 21 of the included instructions. The outline and panel drilling dimensions for the IAV73A and IAV73B relays are shown in Figure 8 of this supplement.

CONNECTIONS

The internal connection diagrams are shown in Figures 1,2,3,4,5,6 and 7 of this supplement.

Since the last edition, Figure 8 has been changed.

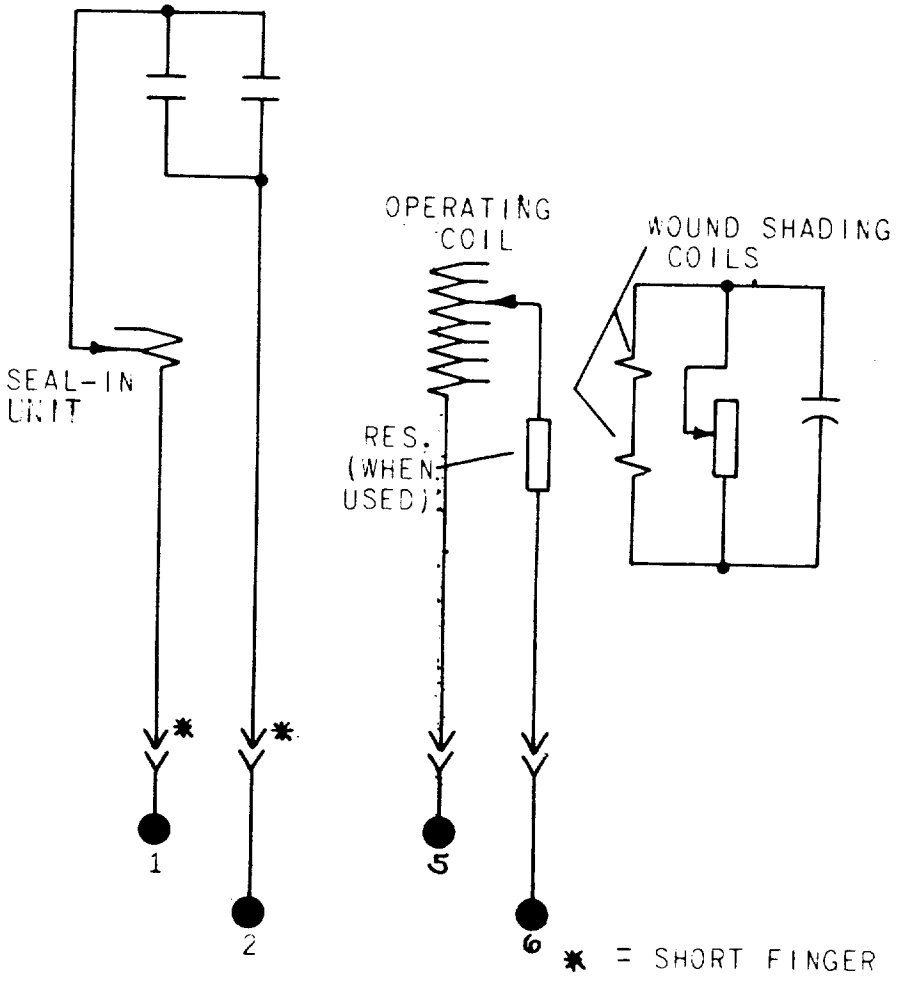

FIG. 1 (0362A0575-1) INTERNAL CONNECTION FOR THE IAV71A RELAY (FRONT VIEW).

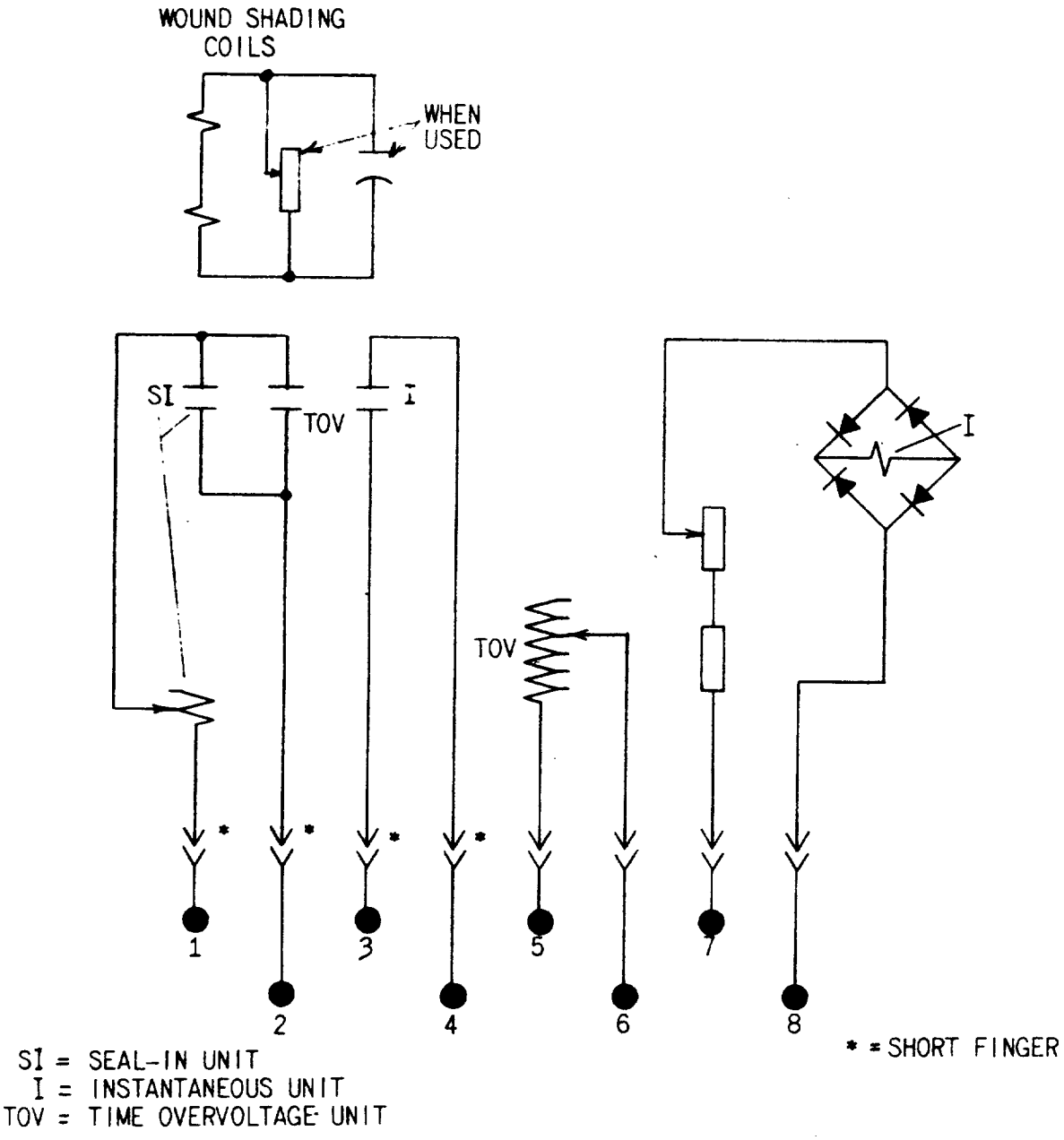

FIG. 2 (0127A9400-2) INTERNAL CONNECTIONS FOR THE IAV71B RELAY (FRONT VIEW).

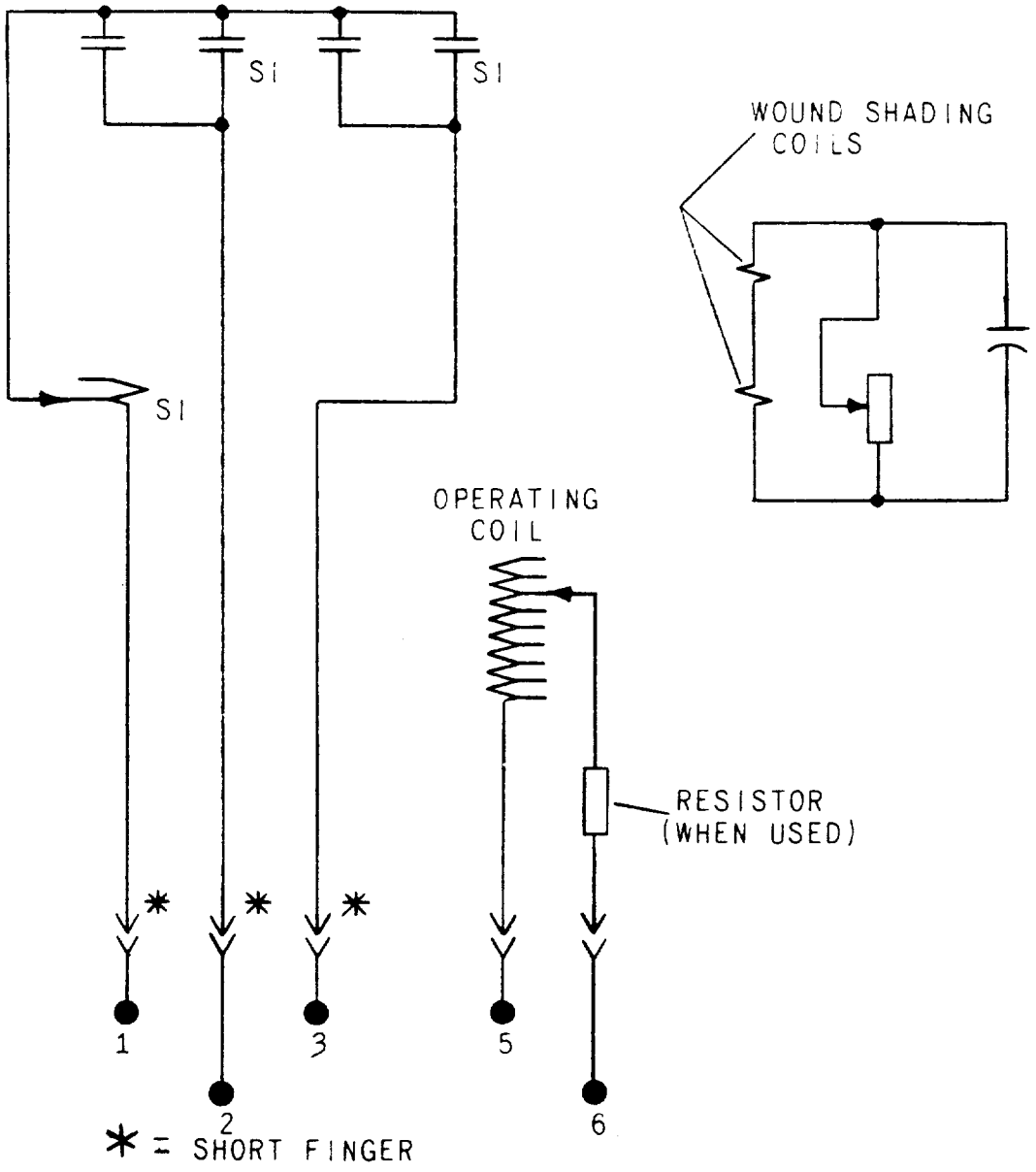

FIG. 3 (0389A0762-1) INTERNAL CONNECTIONS FOR THE IAV72A RELAY (FRONT VIEW).

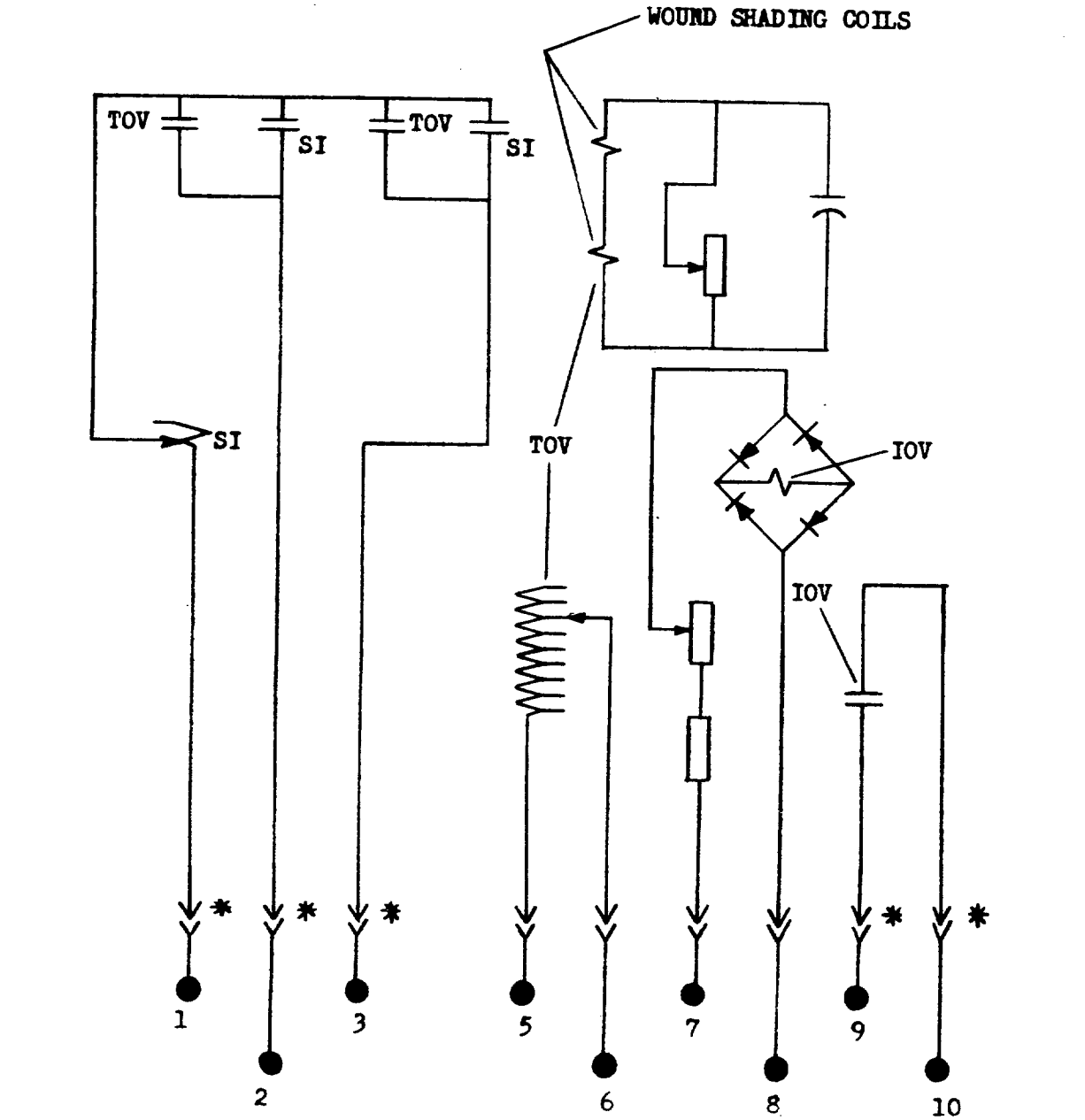

FIG. 4 (0195A4919-0) INTERNAL CONNECTIONS FOR THE IAV72B RELAY (FRONT VIEW).

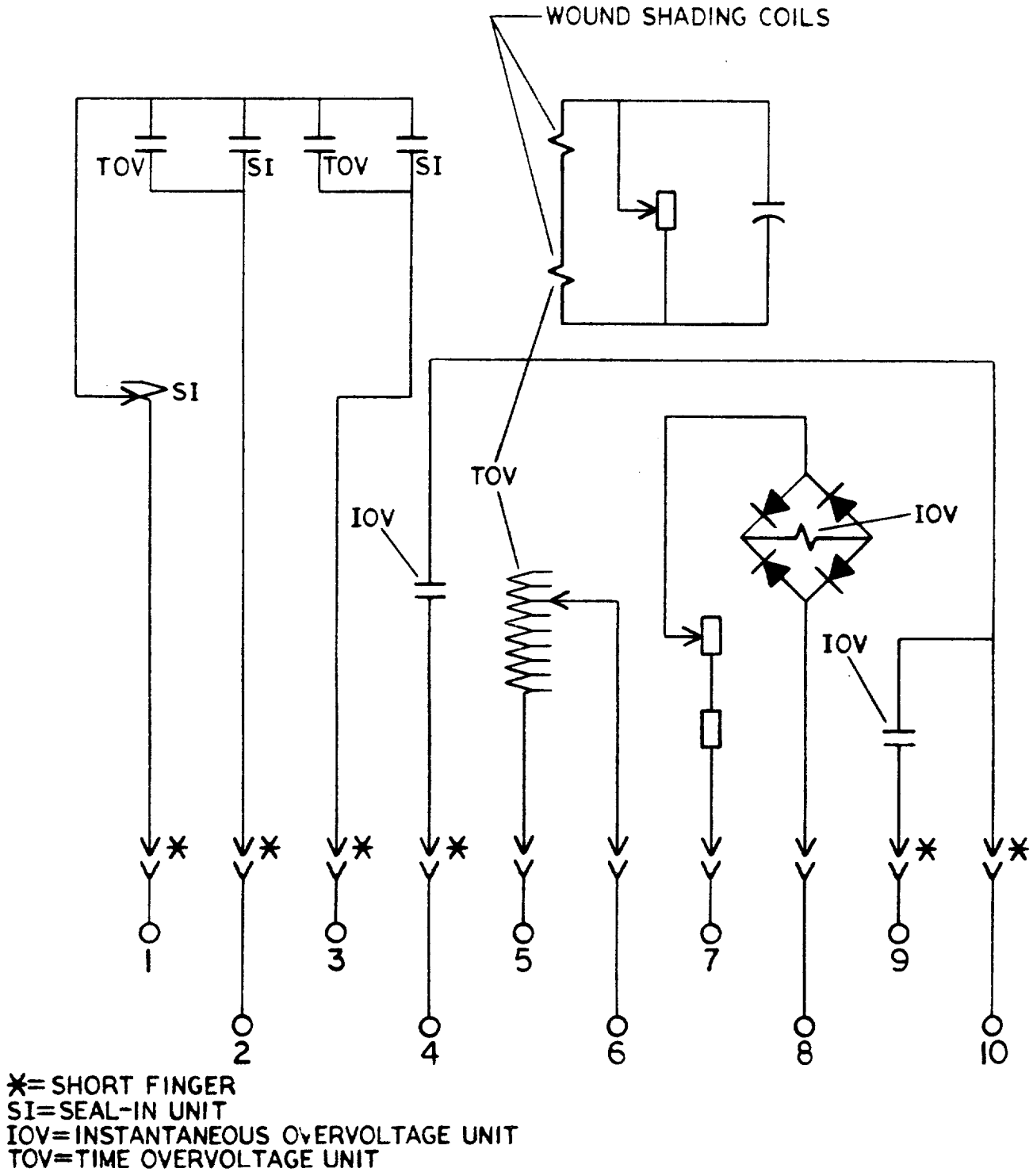

FIG. 5 (0257A8380-0) INTERNAL CONNECTIONS FOR THE IAV72C RELAY (FRONT VIEW).

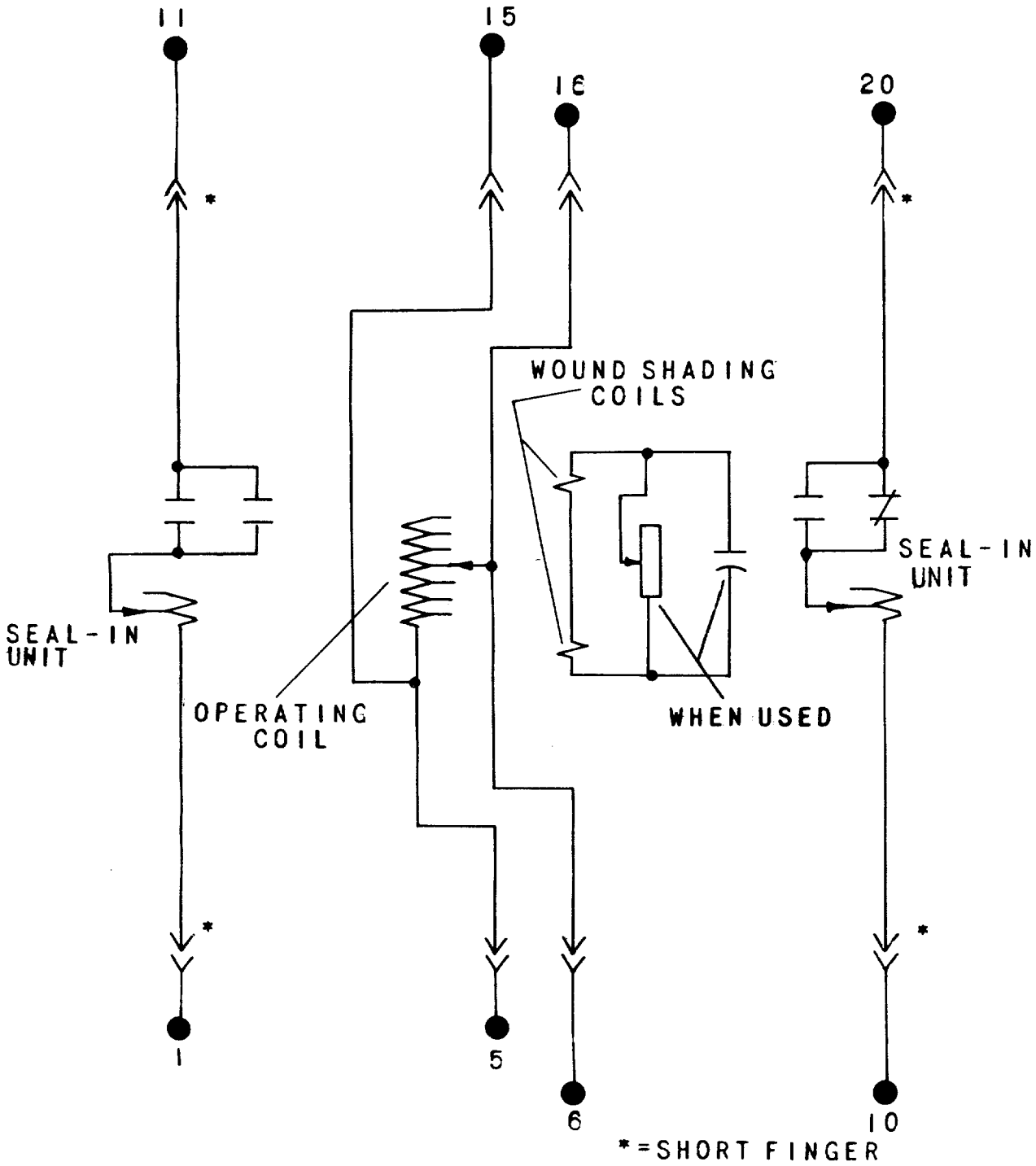

FIG. 6 (K6556489-2) INTERNAL CONNECTIONS FOR THE IAV73A RELAY (FRONT VIEW).

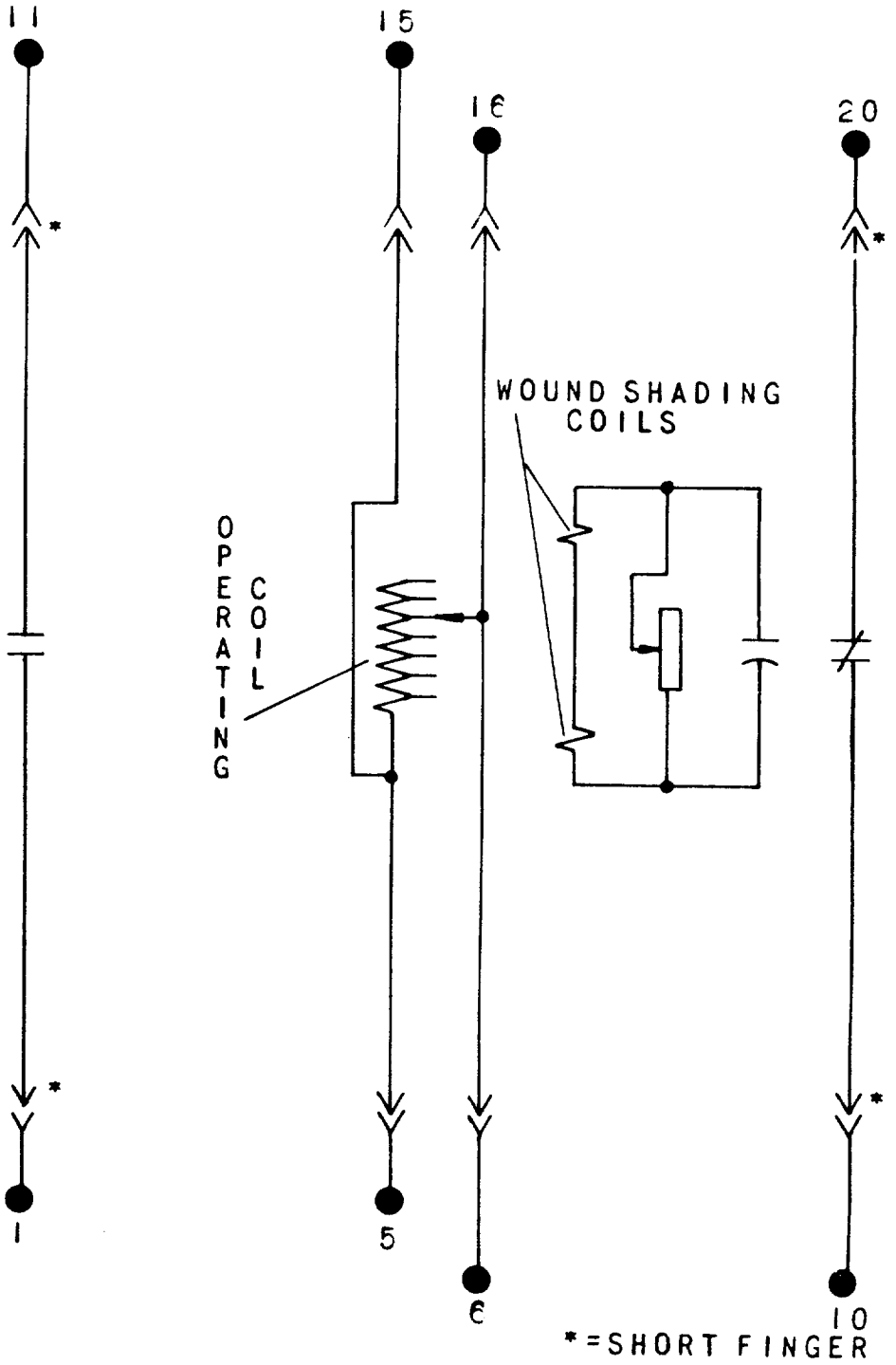

FIG. 7 (K6556490 [1]) INTERNAL CONNECTIONS FOR THE IAV73B RELAY (FRONT VIEW).

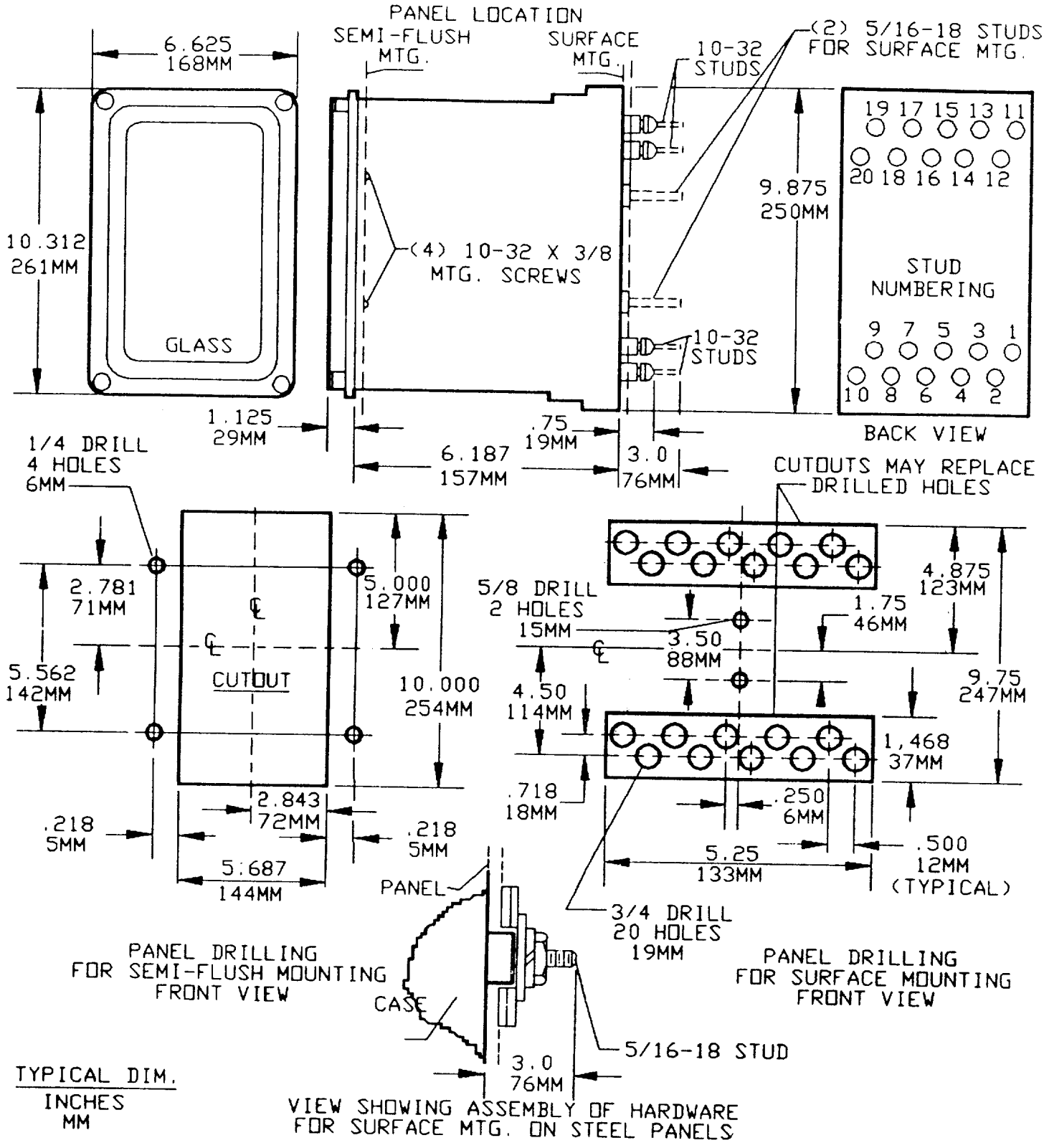

FIG. 8 (K6209272 [7]) OUTLINE AND PANEL DRILLING DIMENSIONS FOR THE IAV73A AND IAV73B RELAYS

INSTRUCTIONS

VOLTAGE RELAYS

TYPES

IAV51A	IAV53D
IAV52A	IAV53K
IAV53A	IAV53L
IAV53B	IAV53M
IAV53C	IAV53N

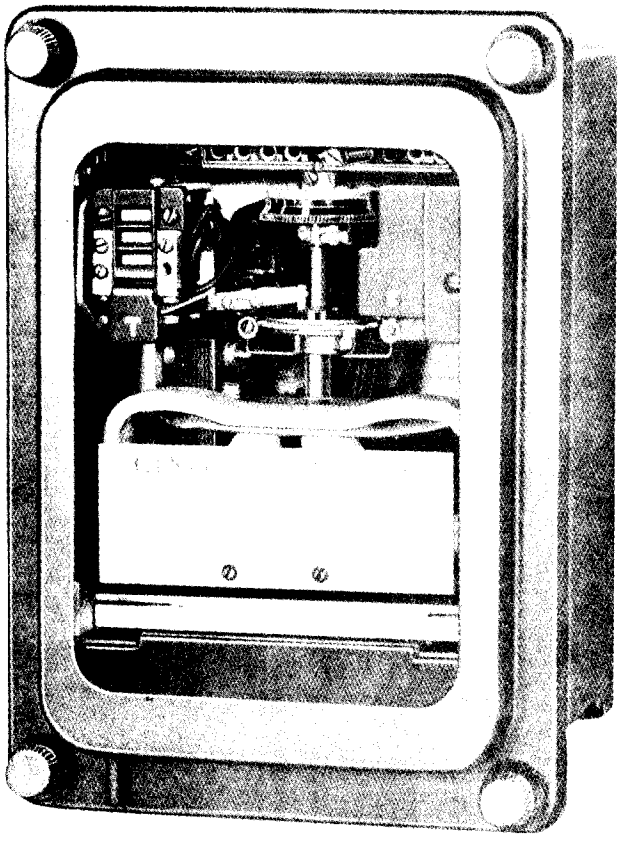

GENERAL ELECTRIC

TABLE OF CONTENTS

	PAGE
DESCRIPTION	3
APPLICATION	3
RATINGS AND BURDENS	4
CHARACTERISTICS	6
CONSTRUCTION	7
RECEIVING, HANDLING AND STORAGE	8
RECEIVING	8
HANDLING	8
STORAGE	8
ACCEPTANCE TESTS	8
VISUAL INSPECTION	8
MECHANICAL INSPECTION	9
ELECTRICAL TESTS	9
Drawout Relays, General	9
Power Requirements, General	10
Pickup Voltage Test	10
Time-Voltage Test	10
INSTALLATION	11
INSPECTION	11
LOCATION	11
MOUNTING	11
CONNECTIONS	11
GROUND CONNECTIONS	11
FIELD INSTALLATION TESTS	11
PERIODIC CHECKS AND ROUTINE MAINTENANCE	11
DISK AND BEARINGS	11
CONTACT CLEANING	12
SERVICING AND ADJUSTMENTS	12
TARGET AND SEAL-IN UNIT	12
VOLTAGE SETTING	12
TIME SETTING	13
BEARING AND CONTACTS	13
RENEWAL PARTS	13
LIST OF FIGURES	14

VOLTAGE RELAYS

TYPES

IAV51A
IAV52A
IAV 53A, 53B, 53C, 53D, 53K, 53L, 53M, and 53N

DESCRIPTION

Type IAV relays are single-phase, voltage-operated, induction-disk relays with adjustable time delay. The IAV51A and IAV52A are overvoltage relays. The IAV53A, B, C, D, K, L, M, and N are over- and undervoltage relays.

APPLICATION

These IAV relays are used for protection against alternating-current (AC) overvoltage, for permissive control and tripping of automatic equipment, and for ground detection on equipment and feeders.

Figure 10 shows the typical connections for the application of an IAV51A relay for protection against overvoltage in a three-phase system. The IAV52A can be used for applications requiring two trip-output circuits. The operating-time characteristics for these relays are shown in Figure 12.

Figure 11 shows the connection diagram for IAV53 over- and undervoltage relays. The IAV53A has separate normally-open and normally-closed contacts with seal-in units on each contact. A typical application for permissive control and tripping of automatic equipment would utilize the normally-open contact to enable the machine breaker-closing circuit when normal machine voltage is present, and the normally-closed contact to operate the machine breaker-trip circuit for undervoltage conditions. The operating-time characteristic for the IAV53A, IAV53B, IAV53K and IAV53L relays are shown in Figure 13. The IAV53D and IAV53N time characteristics are shown in Figure 14.

The IAV53C is designed for ground-fault protection, and would normally be applied with a phase-to-neutral connection, giving 58% of rated voltage. The relay is adjusted to have a 10-second operating time for either a ground on the connected phase (0 volt operates the UV contact), or a ground on another phase (rated volts operates the OV coil).

These instructions do not purport to cover all details or variations in equipment nor provide for every possible contingency to be met in connection with installation, operation or maintenance. Should further information be desired or should particular problems arise which are not covered sufficiently for the purchaser's purposes, the matter should be referred to the General Electric Company.

To the extent required the products described herein meet applicable ANSI, IEEE and NEMA standards; but no such assurance is given with respect to local codes and ordinances because they vary greatly.

RATINGS AND BURDENS

The operating-circuit ratings available are shown in Table I. The operating coil will stand rated voltage continuously on any tap, and will stand tap voltage continuously on the taps above rated voltage.

TABLE I

RELAY	VOLTAGE RATINGS 60 Hz	50 Hz
IAV51A	115 208 230 460	115 208 230 460
IAV52A	115 199 230 460	115 199 230
IAV53A IAV53K	115 230 460	115 230
IAV53B IAV53L	115 230 460	115 230
IAV53C IAV53M	115 199	115 199
IAV53D IAV53N	115 240	

The current-closing rating of the contacts is 30 amperes for voltages not exceeding 250 volts. The current-carrying ratings of all but the IAV53C and IAV53M are affected by the selection of the tap on the seal-in coil as indicated in Table II.

TABLE II

FUNCTION	TAP 0.2	2.0	0.6	2.0
DC Resistance ± 10%	8.3	0.24	0.78	0.18
Minimum Operating "I" (+)0, (−)40%	0.2	2.0	0.6	2.0
Carry "I" Continuously (amperes)	0.37	2.3	1.2	2.6
Carry 30 amps for (seconds)	0.05	2.2	0.5	3.5
Carry 10 amps for (seconds)	0.45	20	5.0	30
60 Hz "Z" (ohms)	50	0.65	6.2	0.65
50 Hz "Z" (ohms)	42	0.54	5.1	0.54

The tap setting used on the seal-in element is determined by the current drawn by the trip coil. The 0.2 ampere tap is for use with trip coils that operate on currents ranging from 0.2 up to 2.0 amperes at the minimum control voltage. If this tap is used with trip coils requiring more than two (2.0) amperes, there is a possibility that the eight ohm (8Ω) resistance will reduce the current to so low a value that the breaker will be tripped.

The two-ampere (2 .0 amp) tap should be used with trip coils that take two amperes or more at minimum control voltage, provided the tripping current does not exceed 30 amperes at the maximum control voltage. If the tripping current exceeds 30 amperes, an auxiliary relay should be used, the connections being such that the tripping current does **not** pass through the contacts of the target/seal-in coil of the protective relay.

The above data in regard to contact rating apply to all relays covered by these instructions except the Types IAV53B and IAV53D, which do not have seal-in units. In these cases, the contact ratings are limited in their current-carrying capacity by the interrupting ratings as shown below:

FUNCTION	VOLTS	AMPERES	
		AC	DC
Make and	125	1.5	0.3†
interrupt	250	0.75	0.15†
at	600	0.00	0.00

† Noninductive Load

Representative burdens for the various relay types are given in Table III.

TABLE III

RELAY TYPES	VOLTAGE RATING	TAP†† SETTING	VOLT-AMPS	POWER FACTOR	WATTS
		60 - CYCLE BURDENS			
IAV51A & IAV52A	115	140	1.3	0.34	0.4
		120	1.8	0.35	0.5
		105	2.4	0.34	0.7
		93	3.1	0.33	0.9
		82	3.9	0.32	1.2
		70	5.4	0.31	1.7
		64	6.6	0.31	2.1
		55	9.2	0.35	3.2
IAV53A, IAV53B, IAV53D IAV53K IAV53L & IAV53N	115	140	2.2	0.32	0.7
		120	3.0	0.30	0.9
		105	4.0	0.31	1.2
		93	5.4	0.31	1.7
		82	7.0	0.32	2.2
		70	9.9	0.34	3.4
		64	12.0	0.36	4.3
		55	17.0	0.39	6.6
IAV53C & 53M	115	NO TAPS	5.7	0.29	1.7

†† Minimum pickup volts

TABLE III (continued)

RELAY TYPES	VOLTAGE RATING	TAP†† SETTING	VOLT-AMPS	POWER FACTOR	WATTS
		50 - CYCLE BURDENS			
IAV51A & IAV52A	115	140	1.2	0.34	0.4
		120	1.6	0.34	0.5
		105	2.1	0.34	0.7
		93	2.8	0.38	1.9
		82	3.6	0.36	1.3
		70	5.1	0.34	1.7
		64	6.2	0.34	2.1
		55	8.2	0.34	2.9
IAV53A, IAV53B, IAV53D IAV53K IAV53L & IAV53N	115	140	1.9	0.32	0.6
		120	2.5	0.30	0.8
		105	3.4	0.29	1.0
		93	4.6	0.31	1.4
		82	6.0	0.32	1.9
		70	8.4	0.35	2.9
		64	12.9	0.29	3.7
		55	13.2	0.35	4.6
IAV53C & 53M	115	NO TAPS	4.8	0.32	1.6

†† Minimum pickup volts

CHARACTERISTICS

The Type-IAV51A is an overvoltage relay with single-circuit closing contacts that close when the voltage increases to pickup value, as set on the tap block. The time delay in closing the contacts is determined by the setting of the time dial at the top of the shaft. The time/voltage characteristics of this relay are shown in Figure 12.

The IAV52A relay is similar in every respect to the IAV51A relay, except that it has additional contacts for closing a second circuit. The time/voltage characteristics are shown in Figure 12.

The IAV53A relay is an under- and overvoltage relay with double-throw contacts. The left-hand contacts close as the voltage increases to some predetermined value. The right-hand contacts close when the voltage decreases to some lower value. Between these two voltage values, both contacts are open. Time/voltage characteristics are shown in Figure 13.

The Type IAV53B relay differs from the Type IAV53A relay in that it does not have seal-in elements. Time/voltage characteristics are shown in Figure 13.

The Type IAV53C and IAV53M relays are similar to the Type IAV53A relay except that there are no taps on the coil. The relay is adjusted to close its right contacts in 10 seconds when the voltage is reduced from 58% rated voltage to zero (0) voltage; with this calibration the relay closes its left contacts in approximately 10 seconds when the voltage is increased from 58% of rated voltage to rated voltage. These relays are used connected line-to-ground so that under normal conditions the relay receives 58% of rated phase-to-phase voltage, and both relay contacts are open. If the phase to which the relay is connected is grounded, the relay voltage goes to zero (0) and the right-hand contacts close in 10 seconds. If either of

the other two phases are grounded, the relay voltage increases to rated voltage and the left-hand contacts close in approximately 10 seconds.

The IAV53D relay is similar to the Type IAV53B relay except that it has a shorter time curve. Time/voltage characteristics are shown in Figure 14.

The Type IAV53K is similar to the Type IAV53A, IAV53L to IAV53B, IAV53M to IAV53C and IAV53N to IAV53D.

While the IAV53A,B,C, & D are in single-end cases, the IAV53K, L, M, and N relays are in the double-end case, with contacts connected between the upper and lower blocks and operating coils connected to both blocks. The purpose of this is to avoid false tripping of the breaker if the connecting plugs are removed and subsequently reinserted with the relay in the reset position, i.e., circuit-opening contacts closed. Insertion of either plug causes the relay to pick up; both plugs must be in place before the contact circuits are completed. See internal connections Figures 1 - 8 for coil and contact circuits, and Figures 10 and 11 for external connections.

CONSTRUCTION

These relays are of the induction-disk construction. The disk is actuated by a potential operating coil on a laminated U-magnet. The disk shaft carries the moving contact, which completes the trip or alarm circuit when it touches the stationary contact or contacts. The disk shaft is restrained by a spiral spring to give the proper contact-closing voltage, and its motion is retarded by permanent magnets acting on the disk to give the correct time delay.

There is a seal-in unit mounted to the left of the shaft of all but the IAV53B, D, L and M models , as shown in Figure 15. This unit has its coil in series and its contacts in parallel with the main contacts, such that when the main contacts close, the seal-in unit picks up and seals in. When the seal-in unit picks up, it raises a target into view, which latches up and remains exposed until released by pressing a button beneath the lower-left corner of the cover.

The case is suitable for either surface or semi-flush panel mounting and an assortment of hardware is provided for either mounting. The cover attaches to the case, and carries the reset mechanism when one is required. Two of the cover screws have provision for a sealing wire.

The case has studs or screw connections at both ends (IAV53K, L. M, or N) or at the bottom only (IAV51 and 52A, and IAV53A, B, C, and D) for the external connections. The electrical connections between the relay units and the case studs are made through spring-backed contact fingers mounted in stationary molded inner and outer blocks, between which nests a removable connecting plug (two plugs for the IAV53K, L, M, and N models) that completes the circuits. The outer blocks, attached to the case, have the studs for the external connections, and the inner blocks have the terminals for the internal connections.

The relay mechanism is mounted in a steel framework called the cradle and is a complete unit, with all leads being terminated at the inner block. This cradle is held firmly in the case by a latch at the top and bottom and by a guide pin at the back of the case. The cases and cradles are so constructed that the relay cannot be inserted in the case upside down. The connecting plug, besides making the electrical connections between the respective blocks of the cradle and case, also locks the latch in place. The cover, which is fastened to the case by thumbscrews, holds the connecting plug in place.

To draw out the cradle from a single-ended case, the cover must first be removed. Then the connecting plug can be drawn out. In so doing, the trip circuit is first opened, then the

voltage circuits are opened. After the connecting plug has been removed, the lower latch can be released and the cradle easily drawn out. To replace the cradle, the reverse order should be followed.

The cradle can be drawn out from a double-ended case in the same way, except that two connecting plugs must be drawn out first.

RECEIVING, HANDLING AND STORAGE

RECEIVING

These relays, when not shipped as a part of a control panel, will be shipped in cartons designed to protect them against damage. Immediately upon receipt of the relay, an examination should be made for any damage sustained during shipment. If injury or rough handling is evident, a damage claim should be filed at once with the transportation company, and the nearest General Electric Sales Office should be notified promptly.

HANDLING

Reasonable care should be exercised in unpacking the relay in order that none of the parts are damaged nor the adjustments disturbed.

STORAGE

If the relays are not to be installed immediately, they should be stored in their original cartons in a place that is free from moisture, dust, and metallic chips.

ACCEPTANCE TESTS

Immediately upon receipt of the relay an **INSPECTION** and **ACCEPTANCE TEST** should be made to make sure that no damage has been sustained in shipment and that the relay calibrations have not been disturbed.

If no pickup value for the left contact is specified on the requisition for the relays with tap blocks, the relay is shipped with the tap plug in the fifth tap. If pickup is specified, the tap plug is set in the tap corresponding to this value. If a specified value does not coincide with one of the taps, the tap plug is put in the tap nearest the required value (the lower tap is used if the value is half way between two taps) and the spring is adjusted to obtain the required pickup.

VISUAL INSPECTION

Check the nameplate stamping the make sure that the model number and rating of the relay agree with the requisition.

CAUTION

Every circuit in the drawout case has an auxiliary brush. It is especially important on current circuits, and other circuits with shorting bars, that the auxiliary brush be bent high enough to engage the connecting plug or test plug before the main brushes do. This will prevent ct secondary circuits from being open.

Remove the relay from its case and check that there are no broken or cracked molded parts or other signs of physical damage, and that all screws are tight. Check that the shorting bars are in the proper location(s) and that they are properly formed (see Figure 9).

MECHANICAL INSPECTION

1. On relays that have time dials, the dials will be set at zero (0) before the relay leaves the factory. It is necessary to change this setting in order to open the relay contacts.

2. On all relays with locked time dials, make sure the two time-dial locking screws are tight. These locking screws are to prevent the dial from moving when the relay is subjected to high operating torque.

3. The moving contact should be fastened securely in its support and should engage the stationary contact about in the middle, or at least 1/16 inch inside, the periphery of the stationary contact.

4. The stop-arm leaf spring should deflect about 1/64 inch and the stop arm should clear the molded block by at least .020 inch.

5. Any foreign material must be cleared out of all air gaps. Clearance between the disk and either the drag magnet or U-magnet should be at least 0.010 inch for any position of the disk.

6. End play of the disk should be from 0.005 inch to 0.010 inch. End play should not be so great as to allow the disk to strike the U-magnet or the drag magnet. Check that top and bottom pivot and bearing screws are tight.

7. There should be no noticeable friction in the rotating structure.

8. Rotate the time dial to the zero position (0). Check by means of a neon lamp that the contacts just close. There should be approximately 1/32 inch wipe on the stationary contact. If the contact does not close, adjust the disk position by backing off the two clamping screws on the stop arm and rotating the stop arm relative to the cutout in the disk. This provides a coarse adjustment. Retighten the clamping screws.

   For fine adjustment of contact closing, run the stationary contact brush in or out by means of its adjusting screw; after this adjustment, check that the screw is held firmly in its support.

9. On double-throw relays, the support post of the upper spring should clear the insulating plate by at least 1/64 inch.

ELECTRICAL TESTS

A. Drawout Relays, General

Since all drawout relays in service operate in their cases, it is recommended that they be tested in their cases or an equivalent steel case. In this way any magnetic effects of the enclosure will be accurately duplicated during testing. A relay may be tested without removing it from the panel by using a 12XLA13A test plug. This plug makes connections only with the relay, and does not disturb any shorting bars in the case. Of course, the 12XLA12A test plug may also be used. Although this test plug allows greater testing flexibility, it also requires CT shorting jumpers and the exercise of greater care, since connections are made to both the relay and the external circuitry.

B. Power Requirements, General

All devices operating on alternating current (AC) are affected by frequency. Since non-sinusoidal waveforms can be analyzed as a fundamental frequency plus harmonics of that fundamental frequency, it follows that alternating-current devices (relays) will be affected by applied waveforms. AC relays (and AC devices in general) are significantly affected by the application of non-sinusoidal waveforms.

Therefore, in order to test AC relays properly it is essential to use a test voltage and/or current waveform that is sinusoidal. The purity of the sine wave (i.e., its freedom from harmonics) cannot be expressed as a finite number for any particular relay; however, any relay using tuned circuits, RL or RC networks, or saturating electromagnets (such as time-overcurrent relays) would be especially affected by non-sinusoidal wave forms.

Similarly, relays requiring DC control power should be tested using DC power and not full wave rectified power. Unless the rectified supply is well filtered, many relays will not operate properly due to the dips in the rectified power. Zener diodes, for example, can turn off during these dips. As a general rule, the DC source should not contain more than 5% ripple.

C. Pickup Voltage Test

The pickup voltage should be checked on one or more taps on relays that close contacts on increasing voltage. The pickup voltage should be tap value ± 5%. The drop-out voltage should be checked on one or more taps on relays that close contacts on decreasing voltage. The dropout voltage is a variable depending upon user requirements. Refer to the VOLTAGE SETTING section under **SERVICING AND ADJUSTMENTS**. See relay nameplates for values of pickup or dropout voltages (closing voltages, right or left contact).

D. Time-Voltage Test

The time/voltage curves should be checked for one or more settings.

Recommended test connections for the above test are shown in Figure 17 for the overvoltage relays, such as the Types IAV51A and IAV52A. The under- and overvoltage relays, such as the Types IAV53A, IAV53B, IAV53C, IAV53D, IAV53K, IAV53L , IAV53M and IAV53N, can be checked for time of closing left contacts by using connections shown in Figure 17, and for closing right contacts by connections shown in Figure 18. Of course the seal-in unit shown in the figure is not used in the case of the IAV53B and IAV53D, but all stud numbers are correct for these relays.

Stud numbers 1 and 2 should be substituted for stud numbers 9 and 10 on Figure 18 for testing the undervoltage contacts of the Type IAV53C relay (See internal diagram, Figure 5). See internal connections, Figures 1-5 for contact and coil connections for IAV51A, IAV52A, IAV53A, B, C & D and Figures 6 - 8, for IAV53K, IAV53L, IAV53M and IAV53N.

INSTALLATION

INSPECTION

At the time of installation, the relay should be inspected for tarnished contacts, loose screws, or other imperfections. If any trouble is found, it should be corrected in the manner described under **MAINTENANCE**. Check the nameplate for model number and rating.

LOCATION

The location should be clean and dry, free from dust and excessive vibration, and well lighted to facilitate inspection and testing.

MOUNTING

The relay should be mounted on a vertical surface. The outline and panel-drilling dimensions are shown in Figure 19 for relay Types IAV51A, IAV52A and IAV53C. Figure 20 shows outline and panel drilling for relay Types IAV53A, IAV53B and IAV53D. Figure 21 shows the outline and panel drilling for relay Types IAV53K, IAV53L, IAV53M and IAV53N.

CONNECTIONS

Internal connections are shown in Figures 1 to 8 for the various relays.

GROUND CONNECTIONS

One of the mounting studs or screws should be permanently grounded by a conductor not less than No. 12 B&S gage copper wire or its equivalent.

FIELD INSTALLATION TESTS

Before the relay is put in service, the pickup voltage and time/voltage tests described in **ACCEPTANCE TESTS** (ELECTRICAL TESTS) should be made, to determine that the adjustments have not been disturbed.

The relay may be tested while mounted on the panel, either from its own or another source of power, by inserting a separate testing plug in place of the connecting plug. Or, the cradle can be drawn out and replaced by another that has been laboratory tested.

PERIODIC CHECKS AND ROUTINE MAINTENANCE

In view of the vital role of protective relays in the operation of a power system it is important that a periodic test program be followed. It is recognized that the interval between periodic checks will vary depending upon environment, type of relay and user's experience with periodic testing. Until the user has accumulated enough experience to select the test interval best suited to his individual requirements, it is suggested that the points listed under **INSTALLATION** be checked every six months.

DISK AND BEARINGS

The lower jewel may be tested for cracks by exploring its surface with the point of a fine needle. If it is necessary to replace the jewel, the jewel should then be turned up until the disk is centered in the air gap, after which it should be locked in position by the set screw provided for the purpose.

CONTACT CLEANING

For cleaning fine silver contacts, a flexible burnishing tool should be used. This consists of a flexible strip of metal with an etch-roughened surface, resembling in effect a superfine file. The polishing action is so delicate that no scratches are left, yet corroded material will be removed rapidly and thoroughly. The flexibility of the tool ensures the cleaning of the actual points of contact; sometimes an ordinary file cannot reach the actual points of contact because of obstruction from some other part of the relay.

Fine silver contacts should not be cleaned with knives, files or abrasive paper or cloth. Knives or files may leave scratches that increase arcing and deterioration of the contacts. Abrasive paper or cloth may leave minute particles of insulating abrasive material in the contracts, and thus prevent closing.

The burnishing tool described above can be obtained from factory.

SERVICING AND ADJUSTMENTS

TARGET AND SEAL-IN UNIT

For trip coils operating on currents ranging from 0.2 up to 2.0 amperes at the minimum control voltage, set the target and seal-in tap plug in the 0.2-ampere tap.

For trip coils operating on currents ranging from 2.0 up to 30 amperes at the minimum control voltage, place the target and seal-in tap plug in the 2.0-ampere tap.

The tap plug is the screw holding the right-hand stationary contact of the seal-in element. To change the tap setting, first remove the connecting plug. Then, take a screw from the left-hand stationary contact and place it in the desired tap. Next, remove the screw from the other, undesired, tap, and place it in the left-hand contact. This procedure is necessary to prevent the right-hand stationary contact from getting out of adjustment. Screws should **not** be in **both** taps at the same time, as pickup for direct current (DC) will be the higher tap value, and AC pickup will be increased.

VOLTAGE SETTING

The voltage at which the contacts operate may be changed by changing the position of the tap plug in the tap block at the top of relays such as the IAV51A, IAV52A, IAV53A, IAV53B, IAV53D, IAV53K, IAV53L,and IAV53N which have tapped coils. The range of this adjustment is from 55 to 140 volts on the 115 volt ratings, 70 to 140 volts on the 199 volt ratings, 110 to 280 volts on the 208, 230 and 240 volt ratings, and 220 to 560 volts on the 460 volt ratings.

The pickup of the relay for any voltage tap is adjusted by means of a spring-adjusting ring (see Figure 15). The ring may be turned by inserting a tool in the notches around the edge. By turning the ring, the operating voltage of the relay may be brought into agreement with the tap setting employed if, for some reason, this adjustment has been disturbed. The adjustment also permits any desired setting between the various taps. The relay is adjusted at the factory to operate from any time-dial positions at a minimum voltage within five percent (5%) of the tap setting for the relays with the tapped coils, mentioned above. The relays reset at 90% or more of the operating value on all the overvoltage relays. Operating voltage for the overvoltage relays for a given tap setting is the minimum voltage at which the contacts just make.

On the under- and overvoltage relays, such as the IAV53A, IAV53B, IAV53C, IAV53D, IAV53K, IAV53L, IAV53M, and IAV53N, the operating voltage for a given tap setting is the minimum voltage at which the left-hand contacts close. The right-hand contacts will then close at a certain percentage of operating voltage. If it is desired to change this percentage, the right-hand moving contact may be rotated on the shaft after first loosening the clamping screws that hold it in place. Changing the position of this (right) contact provides a means of adjusting the voltage that closes the right-hand contacts to a setting between 50% and 95% of the voltage needed to close the left-hand contacts. Changing the position of the right-hand contacts also changes the voltage at which the left-hand contacts close, however. Hence, simultaneous adjustments for closing left (see preceding paragraph) and right contacts must be made to obtain a desired characteristic.

TIME SETTING

The time of operation of the overvoltage relays is determined primarily by the setting of the time dial, while that for the under- and overvoltage relays is determined by the spread of the contacts, as explained under VOLTAGE SETTING. Further adjustment is obtained by moving the permanent magnet along its supporting shelf; moving the magnet in toward the back of the relay decreases the time, while moving it out increases the time.

Figure 12 shows the time/voltage characteristics of the Type IAV51A and IAV52A relays, with the dial setting for obtaining each characteristic. To make time settings, set the time dial to the number required (to give the desired characteristic) by turning it until the number lines up with the notch in the adjacent frame. The time indicated by the curves is the time required to close the relay contacts when the voltage is suddenly increased from a value below pickup to the value on the curve.

Figure 13 shows the characteristics of the IAV53A and IAV53K, and IAV53B and IAV53L relays. The time characteristic of the relay is automatically determined by the setting of the ratio of the voltage to close the right contacts to the voltage to close the left contacts. Figure 14 shows the time/voltage characteristics of the Type IAV53D and IAV53N relays. No curve is given for the Type IAV53C and IAV53M: their time/voltage characteristics are explained under the section heading **CHARACTERISTICS**.

The time/voltage characteristics are plotted in percent, thus making them applicable for all tap settings.

BEARING AND CONTACTS

See **PERIODIC CHECKS AND MAINTENANCE**.

RENEWAL PARTS

It is recommended that sufficient quantities of renewal parts be carried in stock to enable the prompt replacement of any that are worn, broken or damaged. Parts bulletin number GEF-3897 gives a list of those most subject to wear in ordinary operation and most likely to be damaged due to possible abnormal conditions.

When ordering renewal parts, address the nearest Sales Office of the General Electric Company, specify the quantity and the name of the part wanted, as shown in Figures 15 and 16, and give complete nameplate data, including serial number. If possible give the General Electric Company's requisition on which the relay was furnished.

LIST OF FIGURES

FIGURE	DESCRIPTION	PAGE
1	Internal Connections of the Type-IAV51A Relay, Front View	15
2	Internal Connections of the Type-IAV52A Relay, Front View	16
3	Internal Connections of the Type-IAV53A Relay, Front View	17
4	Internal Connections of the Type-IAV53B and -IAV53D Relays, Front View	18
5	Internal Connections of the Type-IAV53C Relay, Front View	19
6	Internal Connection Diagram for Type-IAV53M Relay	20
7	Internal-Connection Diagram for Type-IAV53K Relay	20
8	Internal-Connection Diagram for Type-IAV53L and -IAV53N Relays	20
9	Cross Section of Drawout Case Showing Position of Auxiliary Brush	21
10	Connection Diagram for the Type-IAV51A and IAV52A Relays used for Overvoltage Protection	22
11	Connection Diagram for the Type-IAV53 Relay	23
12	Time-Voltage Curves for Type-IAV51A and -IAV52A Relays (±15% Tolerance)	24
13	Time Voltage Curves for Type-IAV53A,- IAV53B, -IAV53K and -IAV53L Relays (±15% Tolerance)	25
14	Time-Voltage Curves for Type-IAV53D and -IAV53N Relays (±15% Tolerance)	26
15	Front View of Type-IAV51A Relay, Withdrawn From Case	27
16	Back View of Type-IAV51A Relay, Withdrawn From Case	28
17	Test Connections for Overvoltage Relays	29
18	Test Connections for Undervoltage Contacts of Over- and Undervoltage Relays	30
19	Outline and Panel Drilling for Relay Types IAV51A, IAV52A, IAV53C	31
20	Outline and Panel Drilling for Relay Types IAV53A, IAV53B and IAV53D	32
21	Outline and Panel-Drilling Dimensions for Relay Types IAV53K, IAV53L, IAV53M and IAV53N Relays	33

Since the last edition, the GEF number has been changed in the RENEWAL PARTS section and Figure 1 has been retraced.

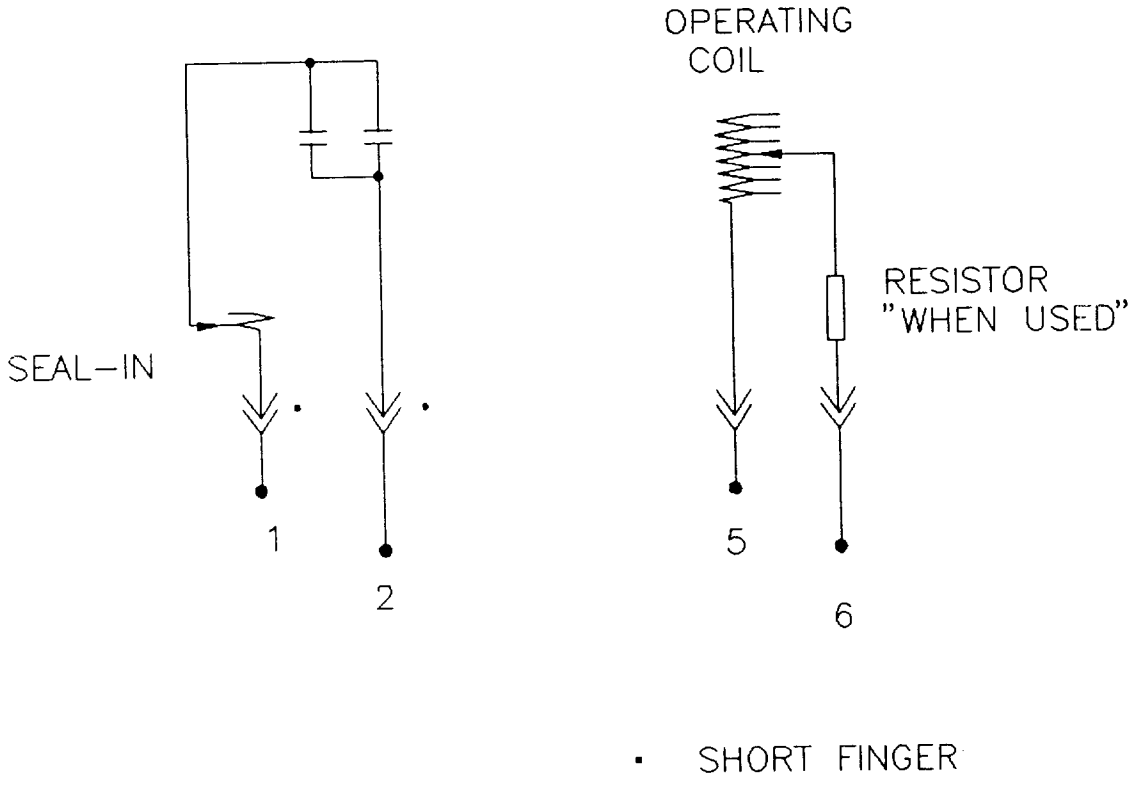

Figure 1 (K-6209664 [7]) Internal Connections of the Type-IAV51A Relay, Front View

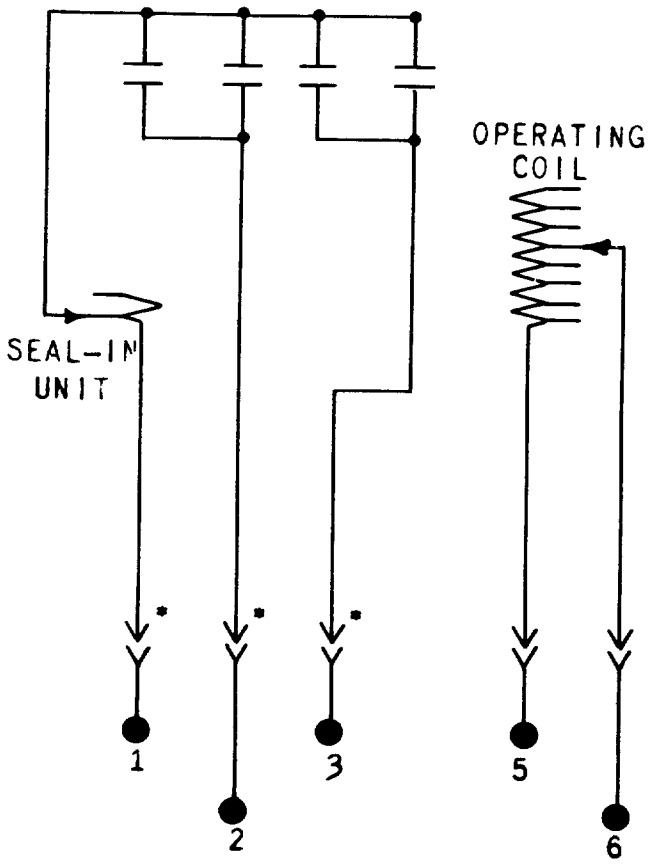

Figure 2 (K-6209665-3) Internal Connections of the Type-IAV52A Relay, Front View

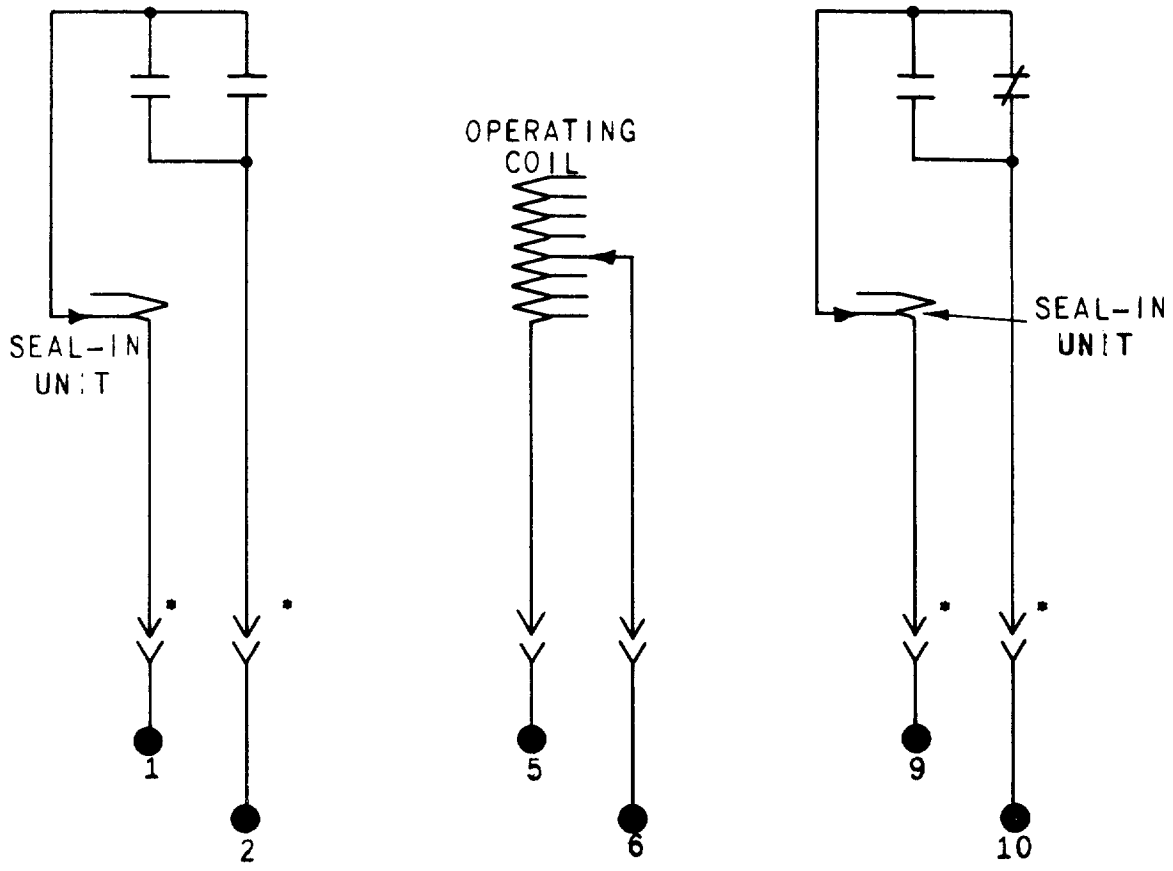

Figure 3 (K-6209666-3) Internal Connections of the Type-IAV53A Relay, Front View

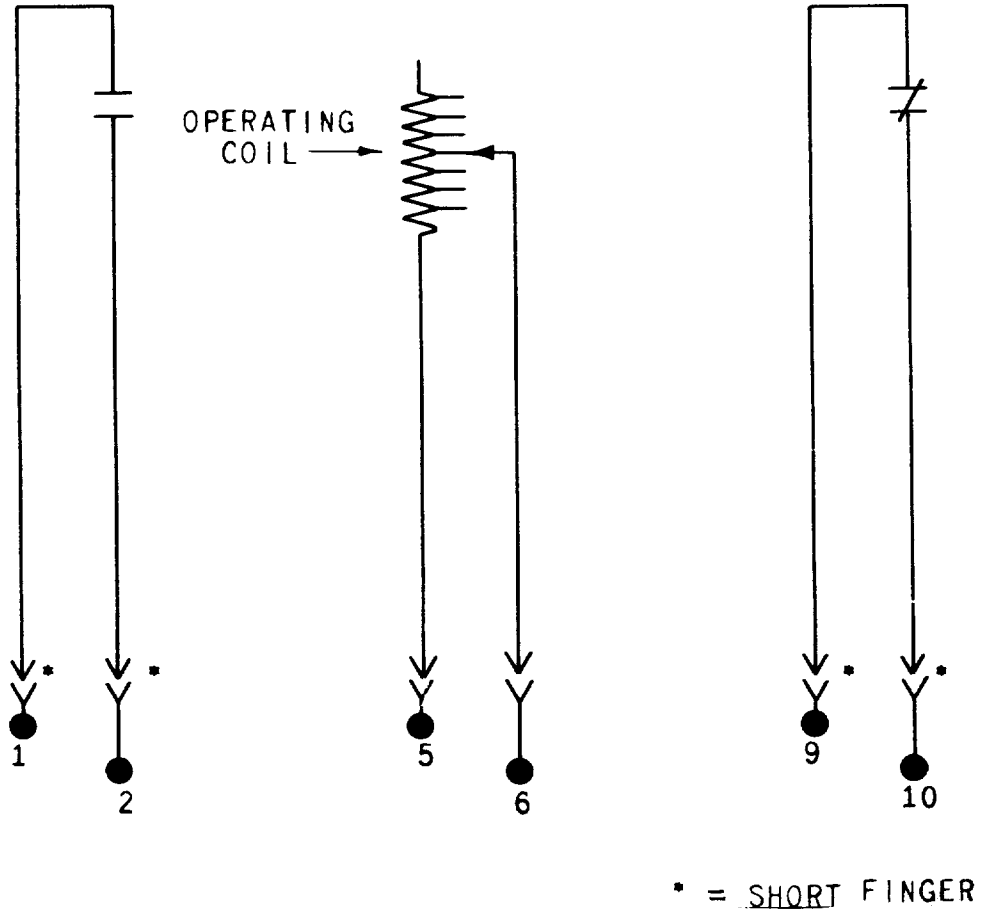

Figure 4 (K-6400143-2) Internal Connections of the Type-IAV53B and -IAV53D Relays, Front View

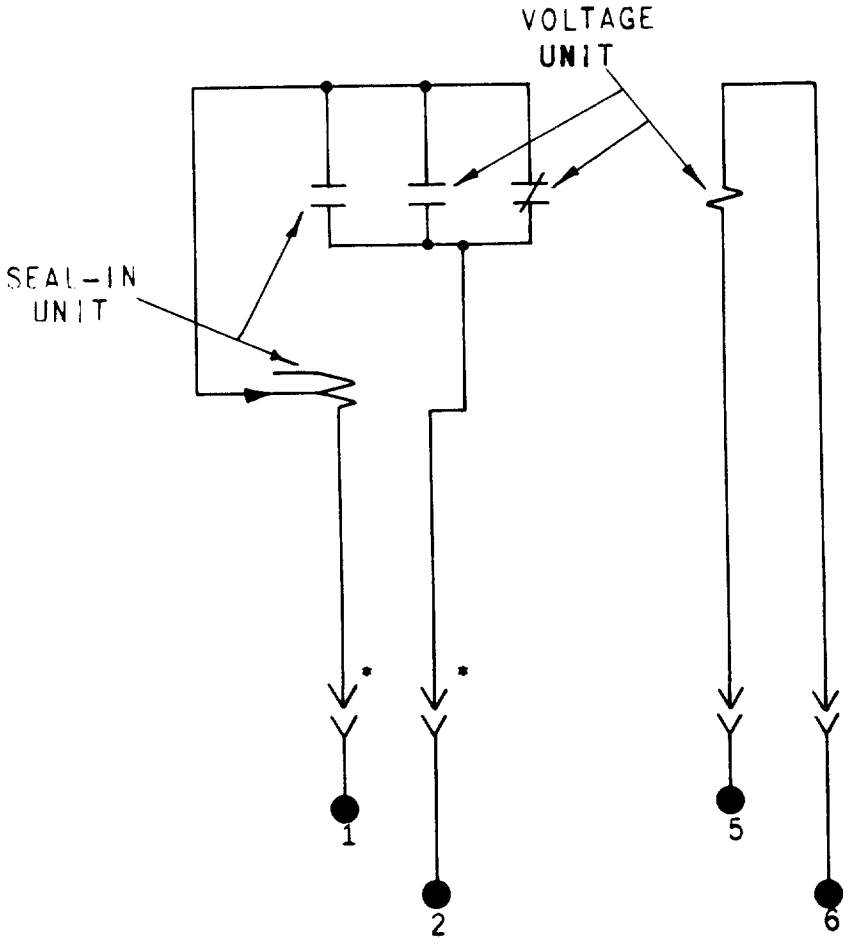

Figure 5 (K-6400385-2) Internal Connections of the Type-IAV53C Relay, Front View

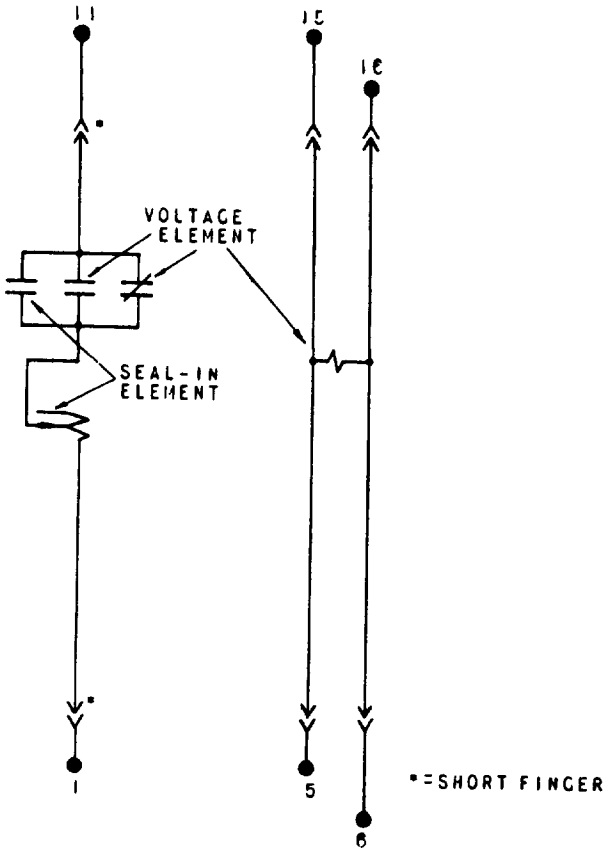

Figure 6 (K-6556579) Internal Connection Diagram for Type-IAV53M Relay

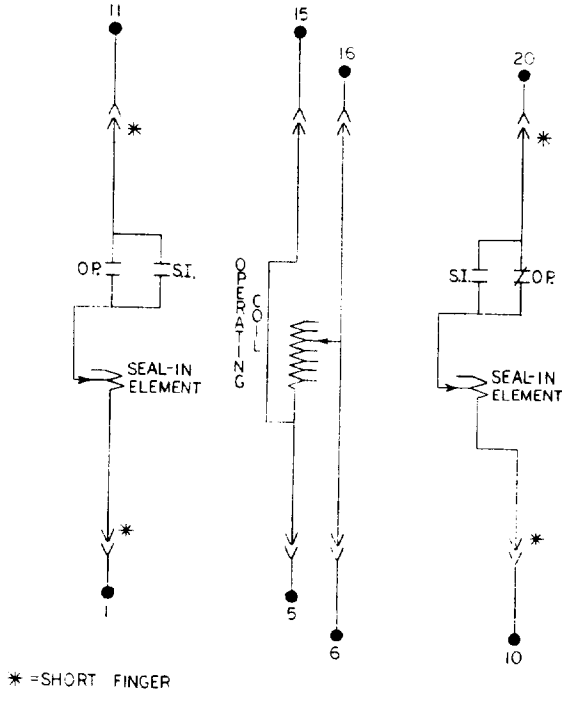

Figure 7 (K-6556475-1) Internal-Connection Diagram for Type-IAV53K Relay

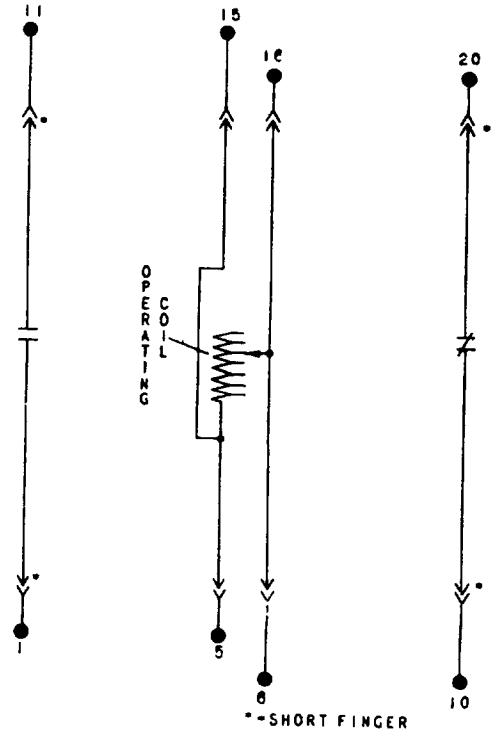

Figure 8 (K-6556476) Internal-Connection Diagram for Type-IAV53L and -IAV53N Relays

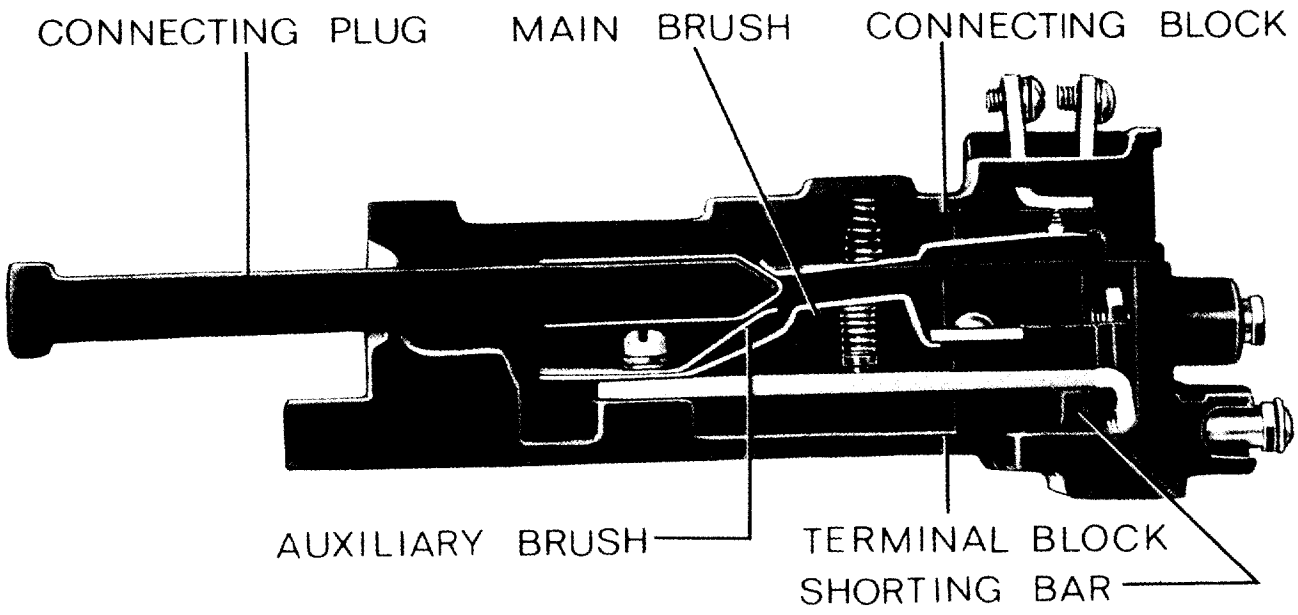

NOTE: AFTER ENGAGING AUXILIARY BRUSH, CONNECTING PLUG TRAVELS 1/4 INCH BEFORE ENGAGING THE MAIN BRUSH ON THE TERMINAL BLOCK

Figure 9 (8025039) Cross Section of Drawout Case Showing Position of Auxiliary Brush

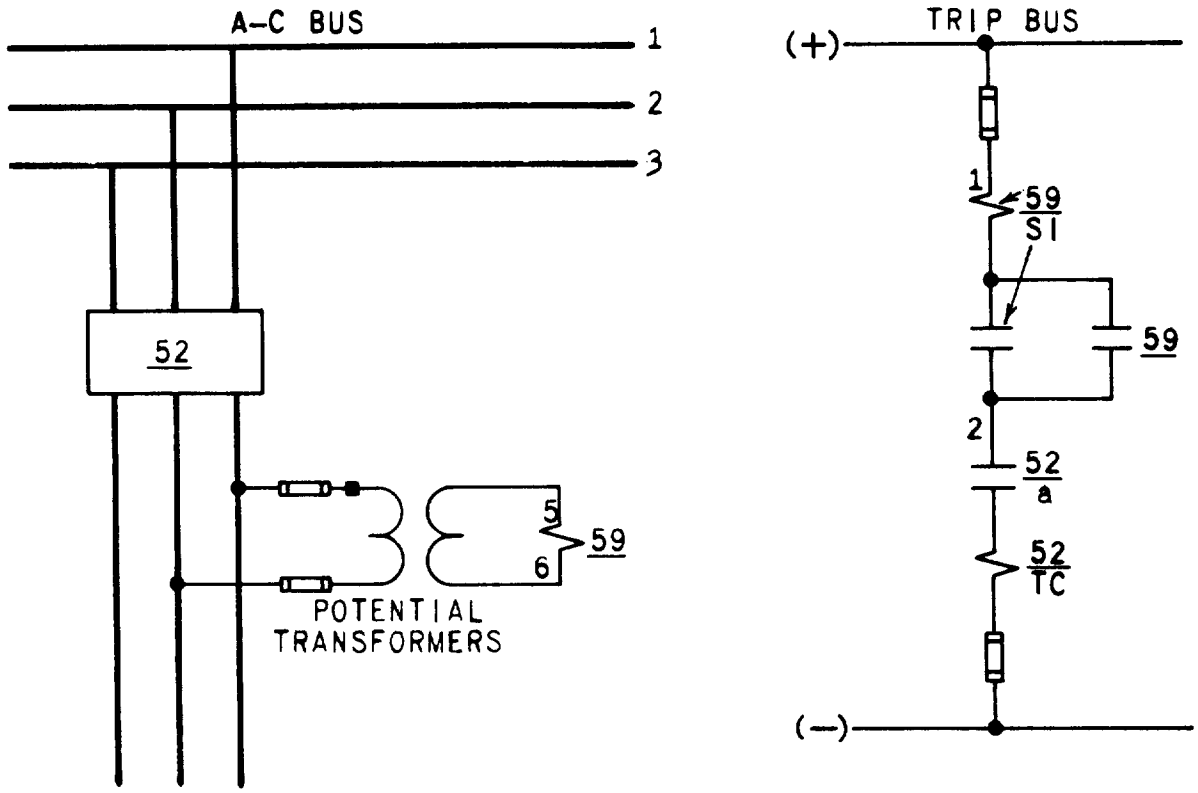

DEVICE FUNCTION NUMBERS

52 - POWER CIRCUIT BREAKER
59 - A-C OVERVOLTAGE RELAY, TYPE IAV51A
a - AUXILIARY CONTACT CLOSED WHEN BREAKER CLOSES
SI - SEAL-IN UNIT WITH TARGET
TC - TRIP COIL

Figure 10 (K-6375692-1) Connection Diagram for the Type-IAV51A and IAV52A Relays used for Overvoltage Protection

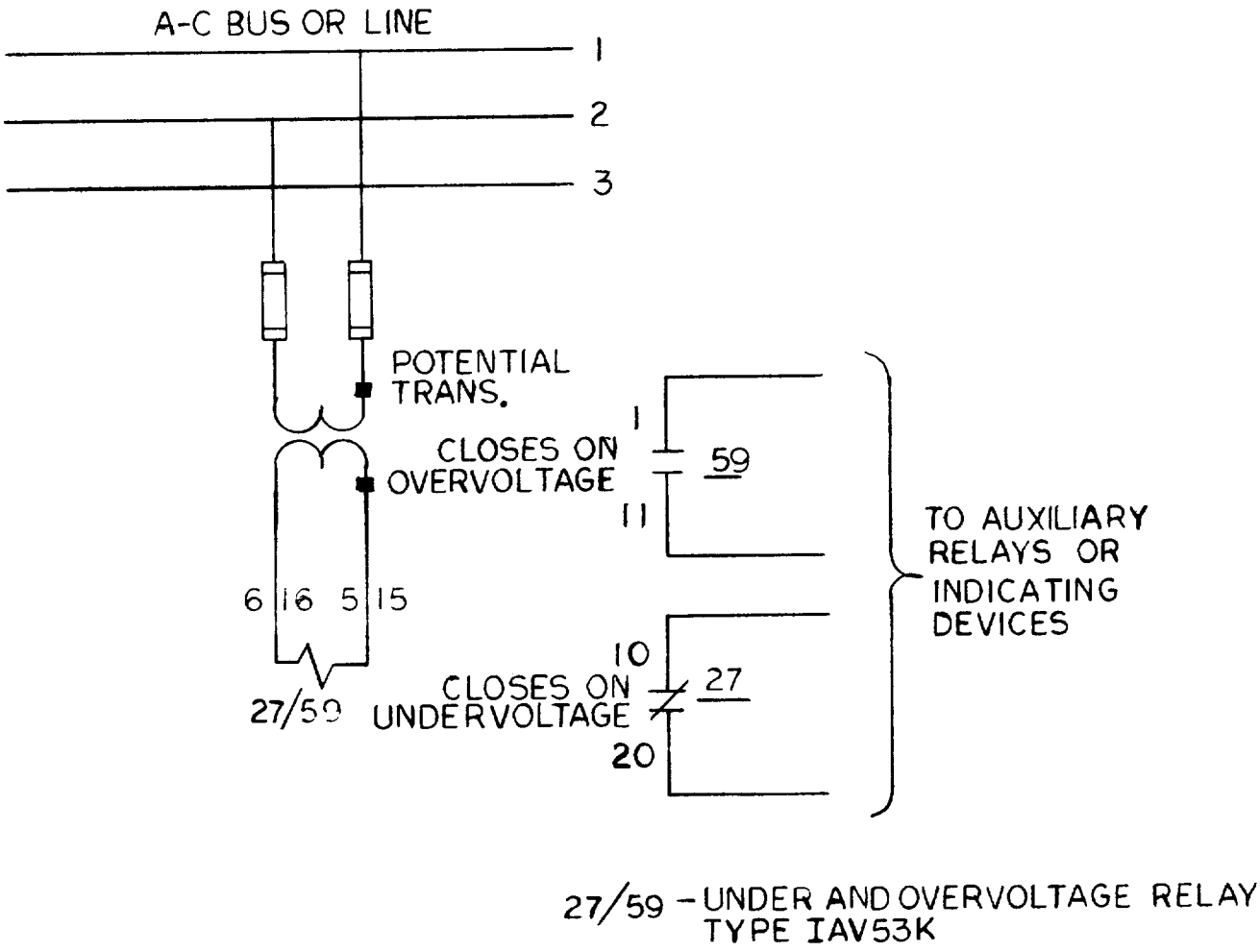

Figure 11 (0275A4305-1) Connection Diagram for the Type-IAV53 Relay

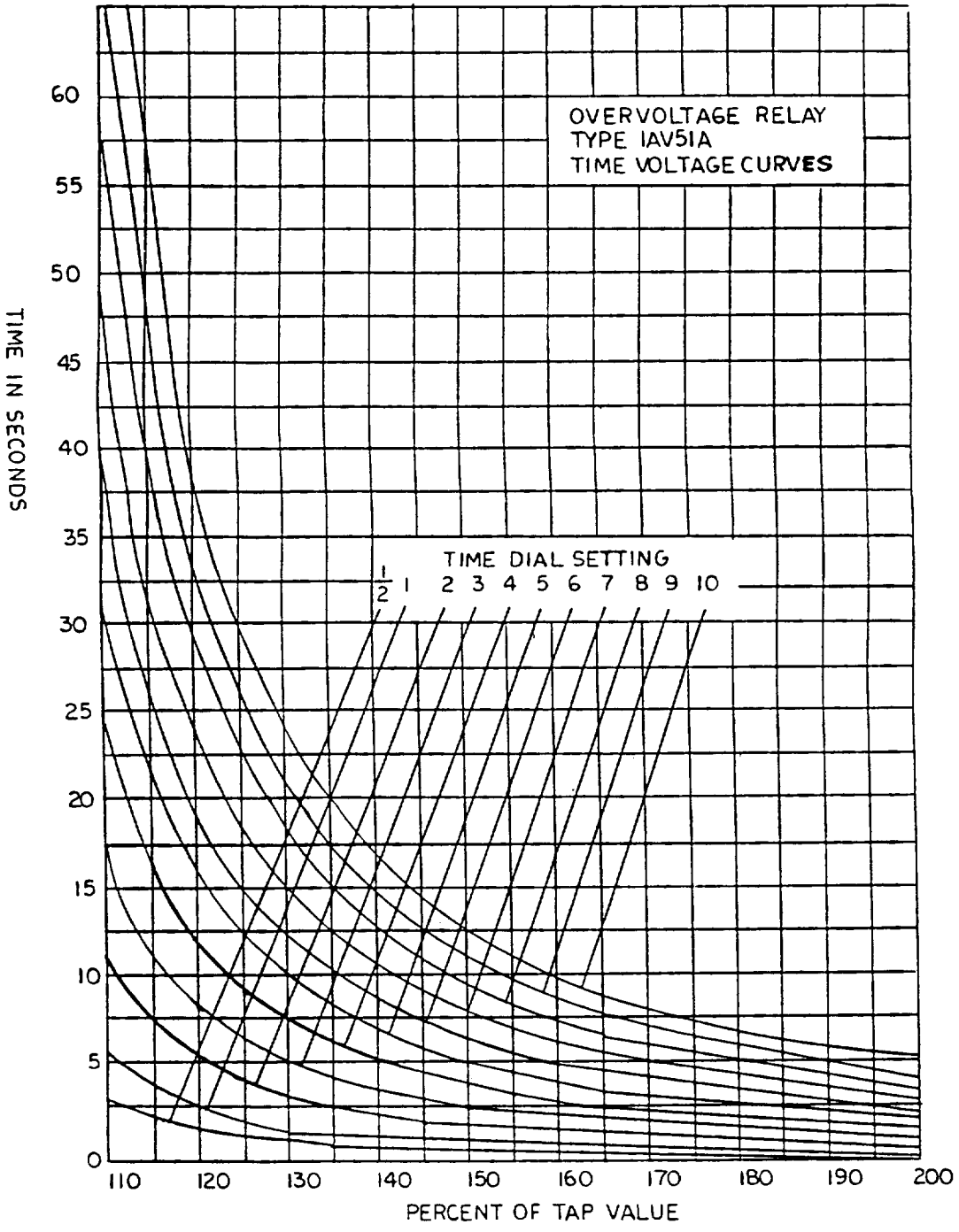

Figure 12 (0285A8966) Time-Voltage Curves for Type-IAV51A and -IAV52A Relays (± 15% Tolerance)

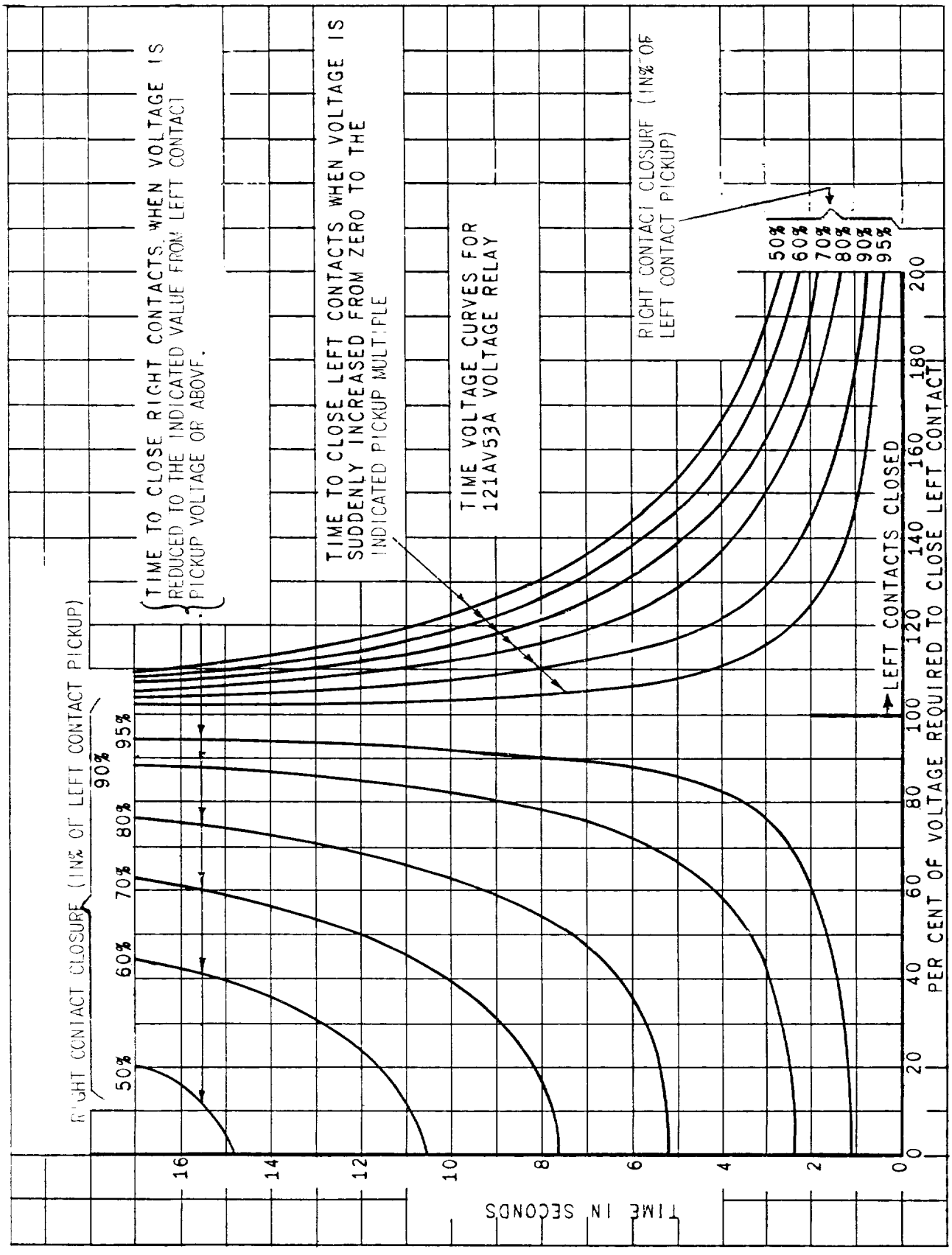

Figure 13 (K-6306849-4) Time Voltage Curves for Type-IAV53A, -IAV53B, -IAV53K, and -IAV53L Relays (± 15% Tolerance)

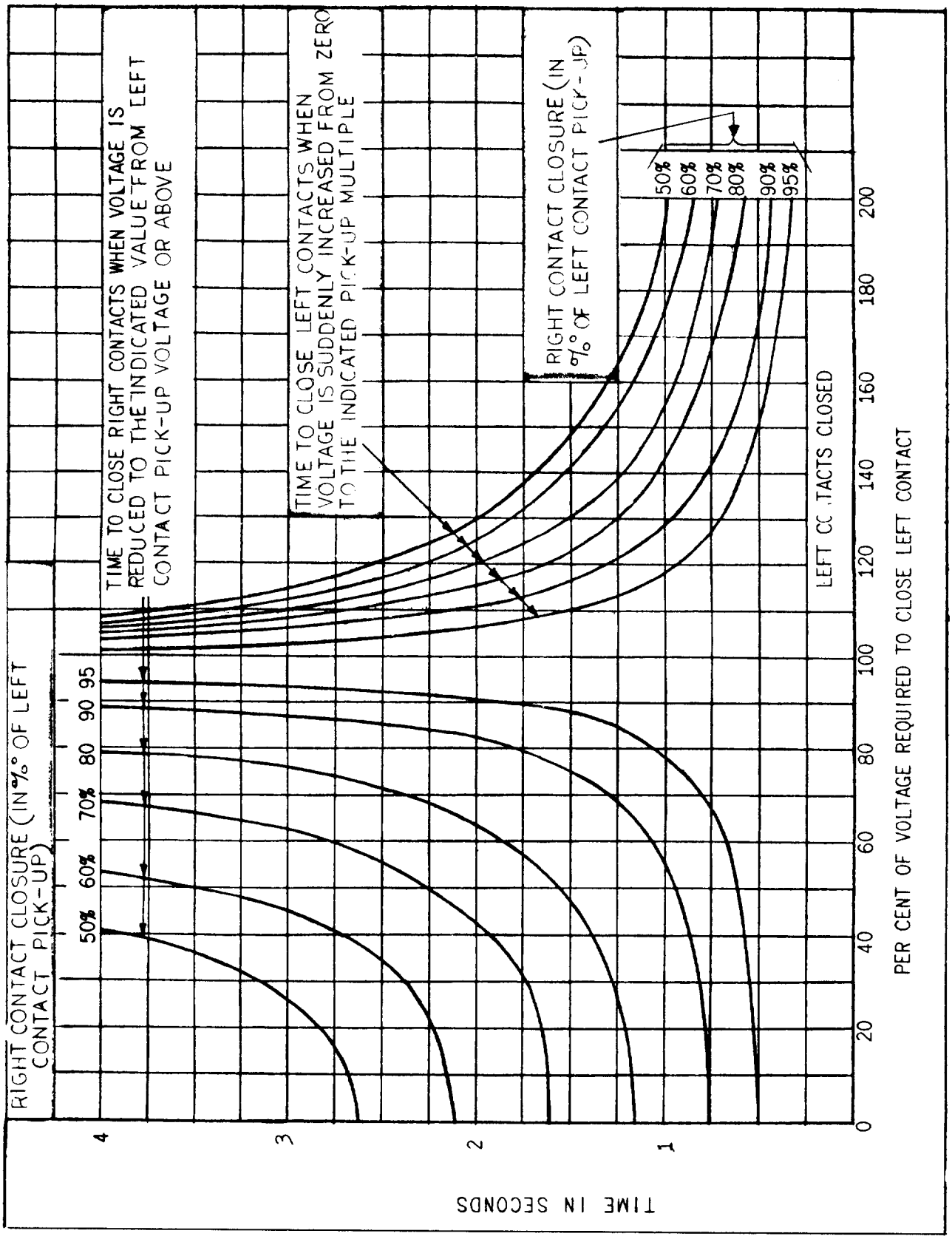

Figure 14 (0104A8993) Time-Voltage Curves for Type-IAV53D and -IAV53N Relays (± 15% Tolerance)

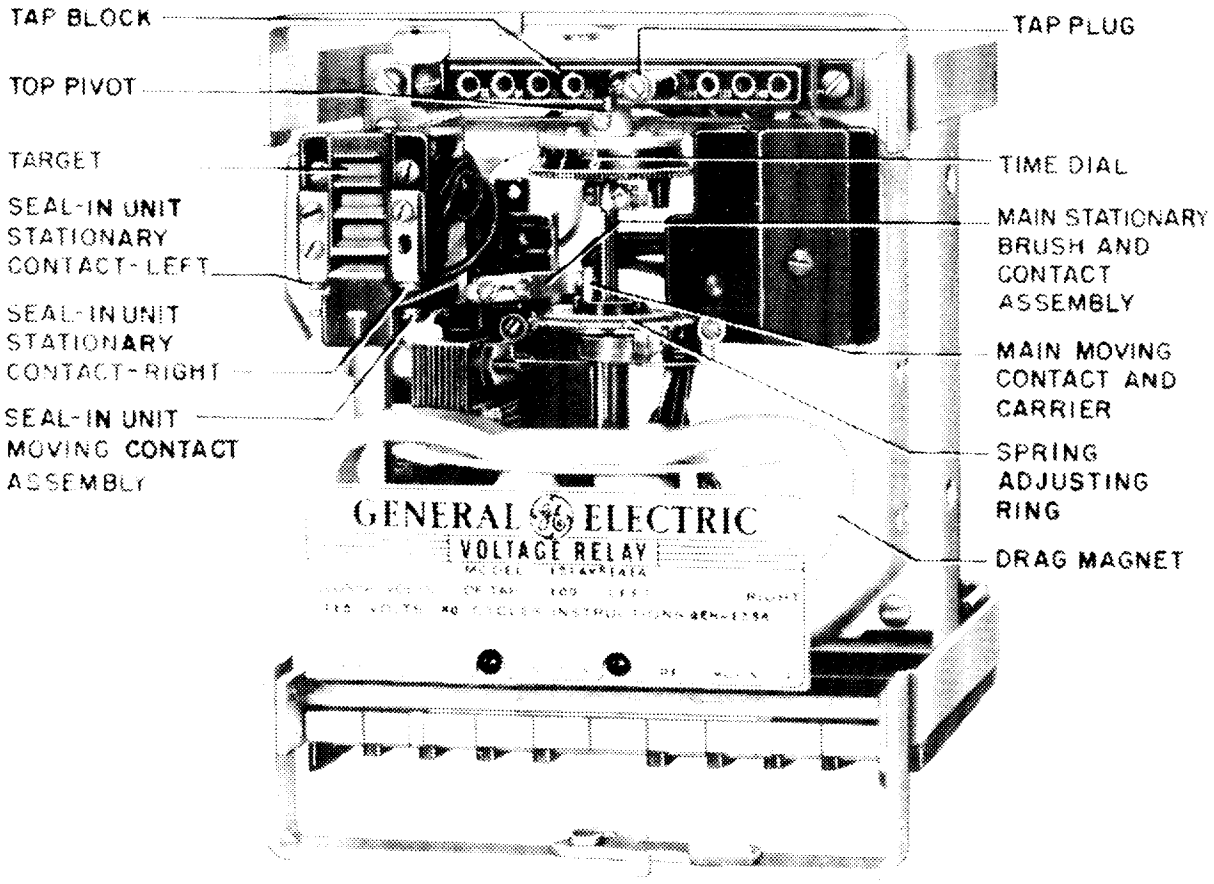

Figure 15 (8007378) Front View of Type-IAV51A Relay, Withdrawn From Case

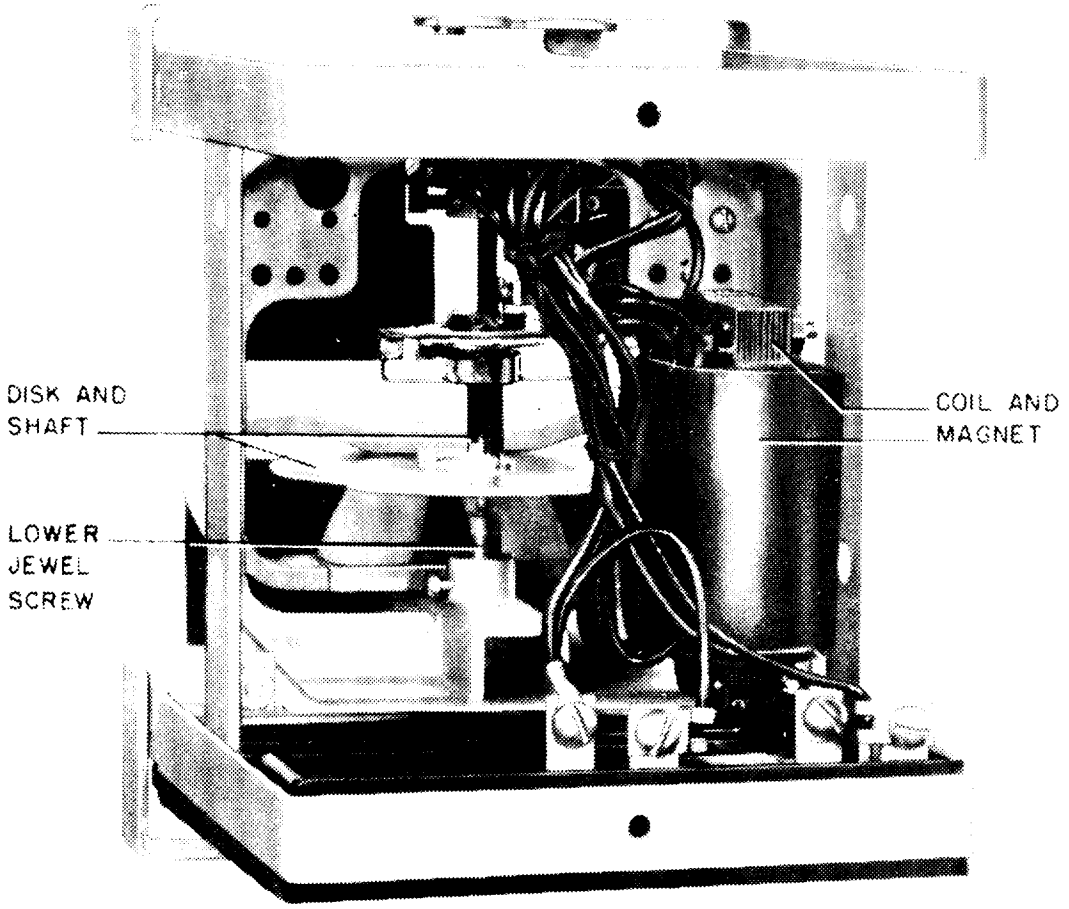

Figure 16 (8007379) Back View of Type-IAV51A Relay, Withdrawn From Case

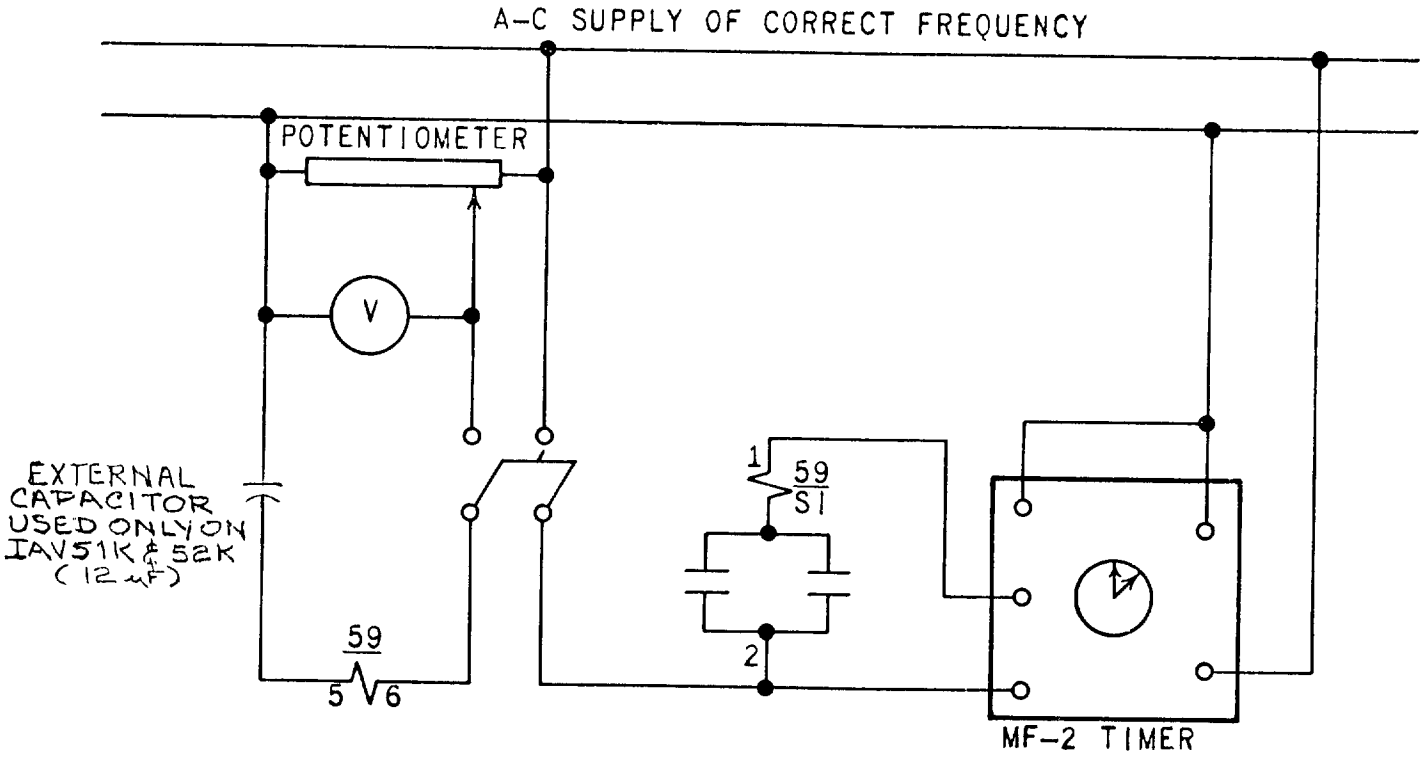

DEVICE FUNCTION NUMBERS

59 - OVERVOLTAGE RELAY TYPE IAV

SI - SEAL-IN UNIT WITH TARGET

Figure 17 (K-6154391-3) Test Connections for Overvoltage Relays

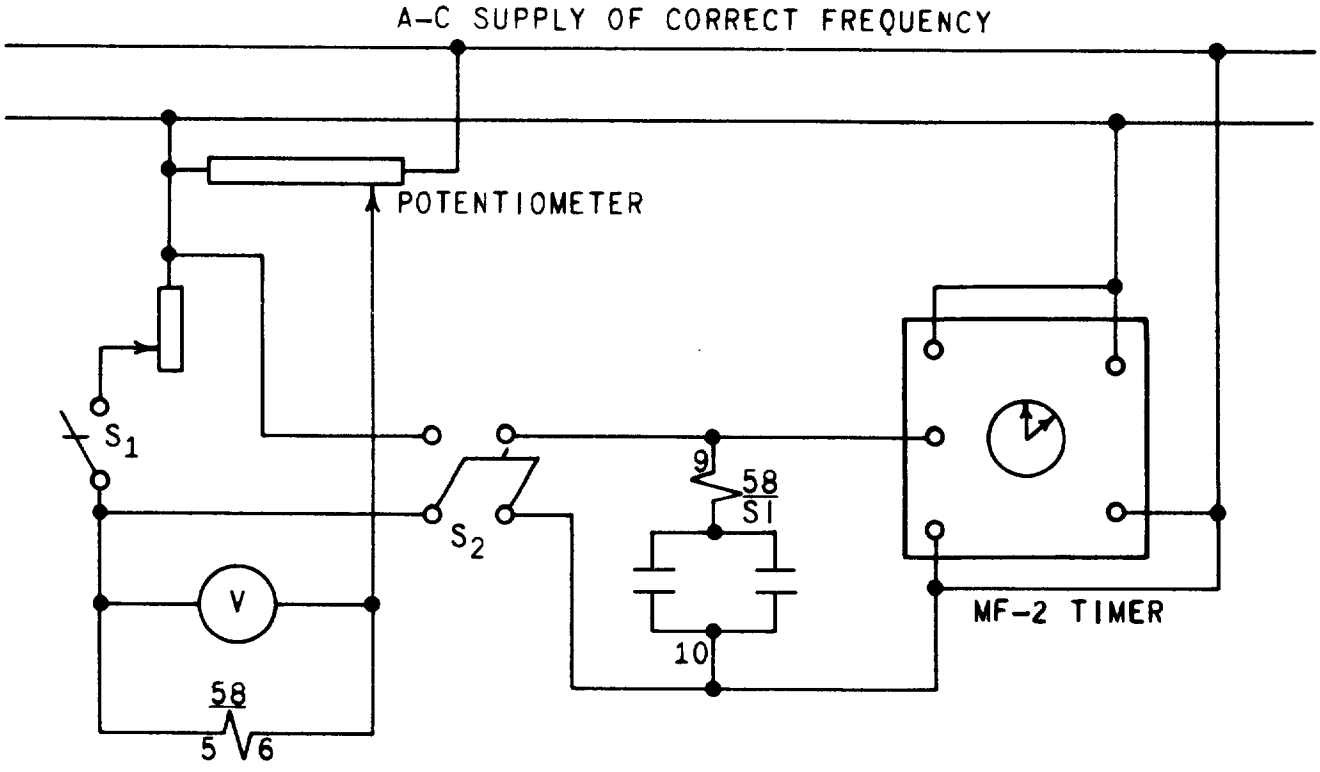

DEVICE FUNCTION NUMBERS

58 – UNDER AND OVERVOLTAGE RELAY, TYPE IAV53

SI – SEAL-IN UNIT WITH TARGET.

Figure 18 (K-6375693-1) Test Connections for Undervoltage Contacts of Over- and Undervoltage Relays

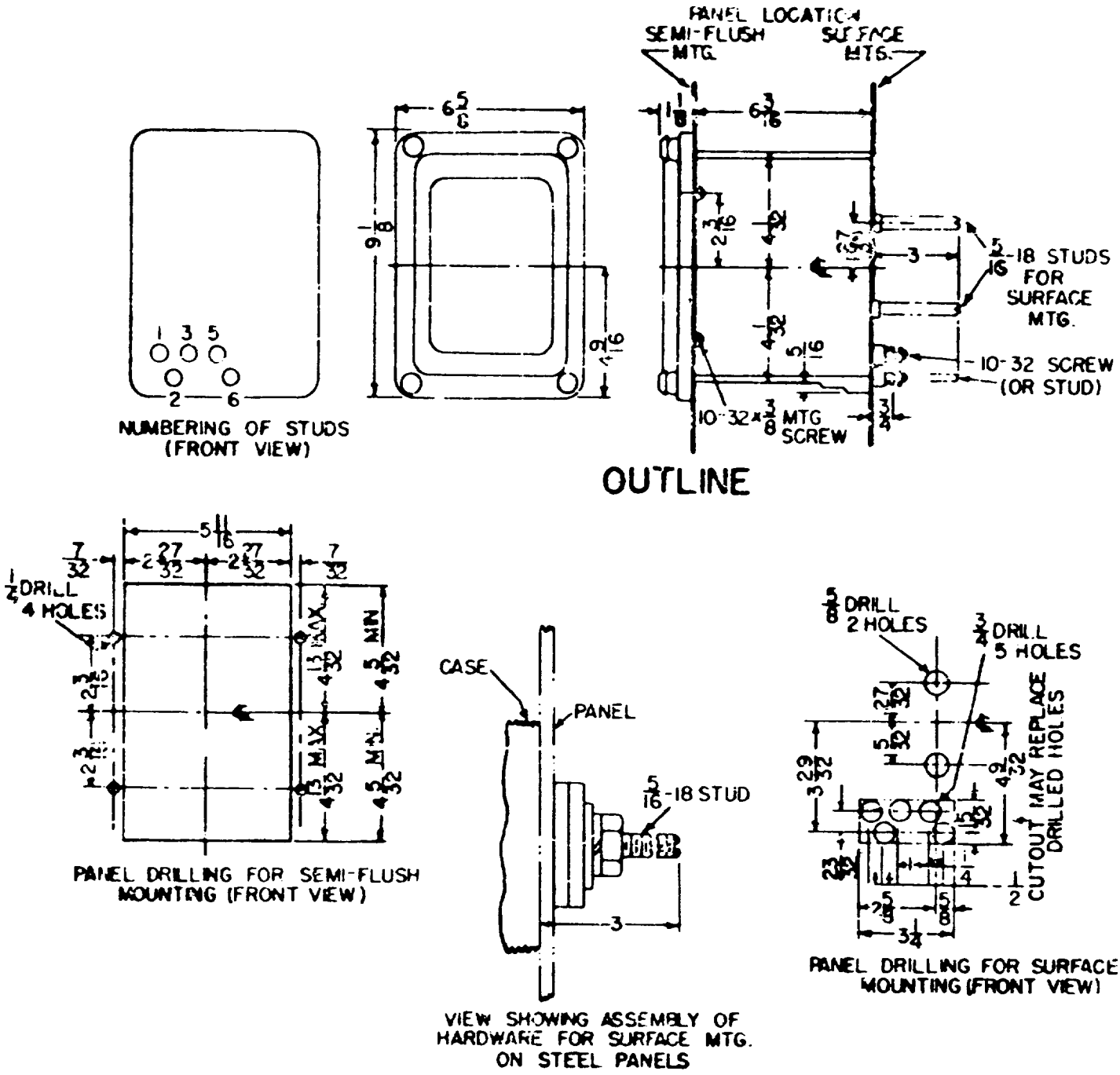

Figure 19 (K-6209270-2) Outline and Panel Drilling for Relay Types IAV51A, IAV52A, IAV53C

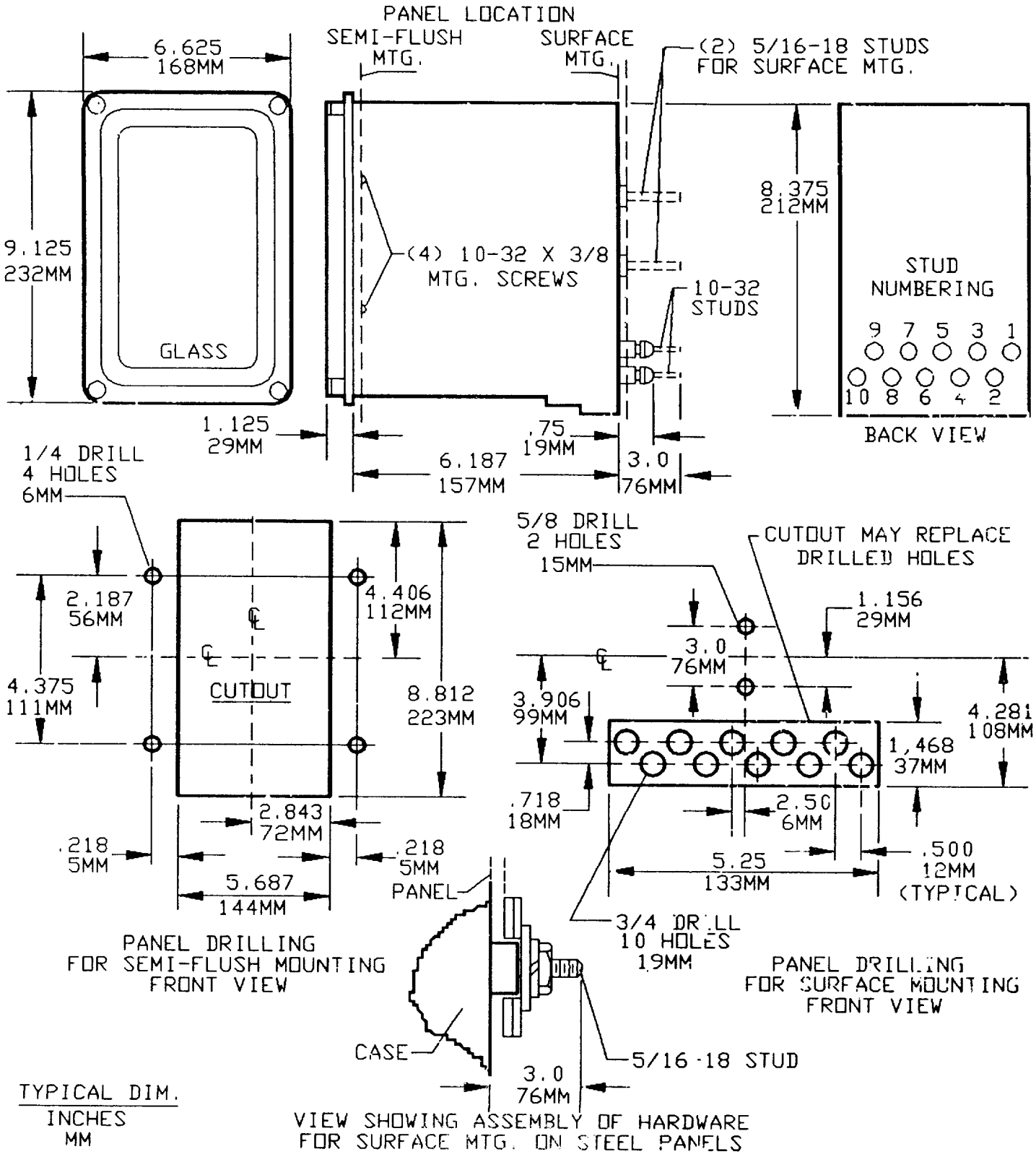

Figure 20 (K-6209271-8) Outline and Panel Drilling for Relay Types IAV53A, IAV53B and IAV53D

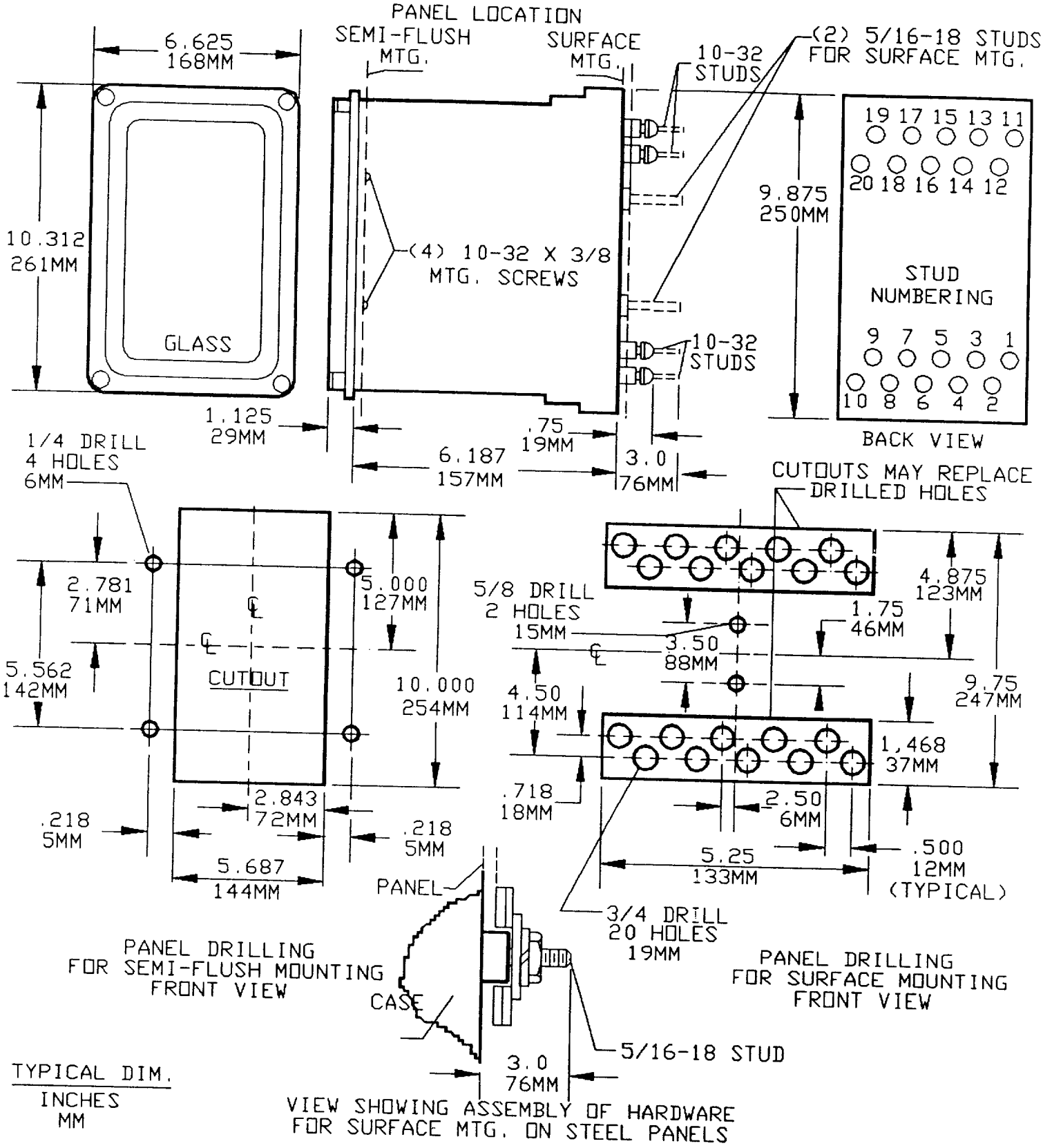

Figure 21 (K-6209272 [7]) Outline and Panel-Drilling Dimensions for Relay Types IAV53K, IAV53L, IAV53M and IAV53N Relays

GE Power Management

215 Anderson Avenue
Markham, Ontario
Canada L6E 1B3
Tel: (905) 294-6222
Fax: (905) 201-2098
www.ge.com/indsys/pm