INSTRUCTIONS

GEK-49850A

PHASE DIRECTIONAL OVERCURRENT RELAYS WITH VOLTAGE RESTRAINT

TYPES JBCV51M
JBCV53M
JBCV53M(-)Y1A
JBCV77M

GENERAL ELECTRIC

CONTENTS

	PAGE
DESCRIPTION	3
APPLICATION	4
RATINGS	5
TIME OVERCURRENT UNIT	5
INSTANTANEOUS OVERCURRENT UNIT (DIRECTIONALLY CONTROLLED)	5
DIRECTIONAL UNIT	6
INSTANTANEOUS UNT (NON-DIRECTIONALLY CONTROLLED)	6
TARGET AND SEAL-IN UNITS	6
CONTACTS	7
OPERATING CHARACTERISTICS	7
PICKUP	7
RESET (Time Overcurrent Unit)	7
OPERATING TIME	7
BURDENS	7
CONSTRUCTION	9
DIRECTIONAL UNIT	9
LOW GRADIENT CONTACT	9
BARREL CONTACT	9
TIME OVERCURRENT UNIT	10
TARGET AND SEAL-IN UNITS	10
INSTANTANEOUS OVERCURRENT UNIT (DIRECTIONALLY CONTROLLED)	10
INSTANTANEOUS UNIT (NON-DIRECTIONALLY CONTROLLED)	11
RECEIVING, HANDLING AND STORAGE	11
ACCEPTANCE TESTS	11
VISUAL INSPECTION	11
MECHANICAL INSPECTION	11
TOP UNIT (IOC)	11
MIDDLE UNIT (TOC)	11
BOTTOM UNIT (DIR)	12
TARGET AND SEAL-IN UNITS/ INSTANTANEOUS UNIT	12
DRAWOUT RELAYS GENERAL	12
POWER REQUIREMENTS GENERAL	12
TARGET AND SEAL-IN UNITS	12
PICKUP AND DROPOUT TEST	12
TIME OVERCURRENT UNIT	13
CURRENT SETTING	13
TIME SETTING	13
PICKUP TEST	14
TIME TEST	14
DIRECTIONAL UNIT	14
POLARITY CHECK	14
INSTANTANEOUS UNIT (DIRECTIONALLY CONTROLLED)	14
PICKUP SETTING	14
INSTANTANEOUS UNIT (NON-DIRECTIONALLY CONTROLLED)	15
INSTALLATION	15
LOCATION	15
MOUNTING	15
CONNECTIONS	15
INSPECTION	15
CAUTION	15
OPERATION	15
TARGET AND SEAL-IN UNITS	15
TIME OVERCURRENT UNIT	16
DIRECTIONAL UNIT	16
INSTANTANEOUS OVERCURRENT UNIT (DIRECTIONALLY CONTROLLED)	16
INSTANTANEOUS UNIT (NON-DIRECTIONALLY CONTROLLED)	16
PERIODIC CHECKS AND ROUTINE MAINTENANCE	16
TARGET AND SEAL-IN UNITS	16
TIME OVERCURRENT UNIT	16
DIRECTIONAL UNIT	16
INSTANTANEOUS OVERCURRENT UNIT (DIRECTIONALLY CONTROLLED)	16
INSTANTANEOUS UNIT (NON-DIRECTIONALLY CONTROLLED)	16
SERVICING	17
TARGET AND SEAL-IN UNITS	17
TIME OVERCURRENT UNIT	17
DISK AND BEARINGS	17
CONTACT ADJUSTMENT	17
CHARACTERISTICS CHECK AND ADJUSTMENTS	17
DIRECTIONAL UNIT	17
BEARINGS	17
CUP AND STATOR	17
CONTACT ADJUSTMENTS	18
BIAS TORQUE ADJUSTMENT	18
CLUTCH ADJUSTMENT	19
INSTANTANEOUS OVERCURRENT UNIT (DIRECTIONALLY CONTROLLED)	19
BEARINGS	19
CUP AND STATOR	19
CONTACT ADJUSTMENTS	19
CLUTCH ADJUSTMENT	19
INSTANTANEOUS UNIT (NON-DIRECTIONALLY CONTROLLED)	19
CONTACT CLEANING	20
RENEWAL PARTS	20

PHASE DIRECTIONAL OVERCURRENT RELAYS WITH VOLTAGE RESTRAINT

TYPES JBCV51M
JBCV53M
JBCV53M(-)Y1A
JBCV77M

DESCRIPTION

The Type JBCV relays are phase directional overcurrent relays with voltage restraint. They are used primarily for the protection of feeders and transmission lines. They are available with inverse, very inverse or extremely inverse time characteristics.

All the JBC relays contain a time overcurrent unit of the induction disk type, an instantaneous overcurrent cup type unit and an instantaneous directional cup type unit. The directional unit is quadrature polarized and it directionally controls the operation of the time overcurrent and the instantaneous overcurrent units. Because the directional unit is voltage restrained, the JBCV relays are suitable for use in those applications where the maximum load current can be greater than the minimum available fault current.

Two target seal-in units are provided in each of the relays. The operating coil of each of these units respectively is connected in series with the contacts of the time overcurrent unit and the instantaneous overcurrent unit. The contacts of each seal-in unit respectively are connected in parallel with the contacts of the time overcurrent unit and the instantaneous overcurrent unit to provide protection for them and the associated control spring.

Those relays having the designation Y1A following the model number also contain a Hi-Seismic instantaneous unit of hinged armature construction. This unit is non-directional and has a self-contained hand reset target that will show whenever the unit has operated.

All the JBCV relays are mounted in standard M1 size drawout cases; the outline and panel drilling dimensions for which are shown in Fig. 24. Internal connections for the relays are shown in Fig. 5, 6 and 7. Typical external connections are shown by Figs. 8 and 9.

Table I below lists the various models and ranges that are available.

TABLE I

EXTENDED RANGE JBCV RELAYS

Relay Model	Time Characteristic	Hi-Seismic Unit	Pickup Range			Int. Conn.
			Hi-Seismic	Time	Inst. Cup	
JBCV51M(-)A	Inverse	No	-	2-16	2-16, 10-80	Fig. 5
JBCV53M(-)A	Very Inverse	No	-	1.5-12	2-16, 10-80	Fig. 5
JBCV53M(-)Y1A	Very Inverse	Yes	6-150	1.5-12	2-16	Fig. 6
JBCV77M(-)A	Extremely Inv.	No	-	1.5-12	2-16, 10-80	Fig. 7

These instructions do not purport to cover all details or variations in equipment nor to provide for every possible contingency to be met in connection with installation, operation or maintenance. Should further information be desired or should particular problems arise which are not covered sufficiently for the purchaser's purposes, the matter should be referred to the General Electric Company.

To the extent required the products described herein meet applicable ANSI, IEEE and NEMA standards; but not such assurance is given with respect to local codes and ordinances because they vary greatly.

APPLICATION

The Type JBCV relays are phase directional overcurrent relays that are used primarily as phase fault detectors in transmission line or feeder protective relaying schemes.

JBCV relays are used for phase fault protection when it is necessary to distinguish between fault conditions and maximum load. The relay is prevented from tripping on heavy load currents because the directional unit will be restrained due to the system voltage being maintained. When a fault occurs, the restraining torque in the directional unit will collapse as the voltage drops, thus permitting the relay to trip even at fault currents below the maximum load current.

Each relay contains a time overcurrent unit and an instantaneous overcurrent unit that are both torque controlled by the instantaneous directional unit. The directional unit is quadrature polarized; i.e., the "a" phase relay uses "a" phase current and "b-c" voltage, etc. The angle of maximum torque of the directional unit is approximately 45 degrees; i.e., maximum torque will occur for relay current lagging the unity power factor position by 45 degrees, or conversely, leading the quadrature voltage by 45 degrees.

The differences between the various models covered by this instruction book are shown in Table I. Inverse time relays should be used on systems where the fault current flowing through a given relay is influenced largely by the system generating capacity at the time of the fault. Very inverse time and extremely inverse time relays should be used in cases where the fault current magnitude is dependent mainly upon the location of the fault in relation to the relay, and only slightly or not at all upon the system generating setup. The reason for this is that relays must be set to be selective with maximum fault current flowing. For fault currents below this value, the operating time becomes greater as the current is decreased. If there is a wide range in generating capacity, together with variation in short-circuit current with fault position, the operating time with minimum fault current may be exceedingly long with very inverse time relays and even longer with extremely inverse time relays. For such cases, the inverse time relay is more applicable.

The choice between very inverse and extremely inverse time relays is more limited than between them and the inverse time relay as they are more nearly alike in their time-current characteristic curves. For grading with fuses the extremely inverse time relay should be chosen as the time-current curves more nearly match the fuse curve. Another advantage of the extremely inverse relay is that it is better suited than both the inverse and very inverse relays for picking up cold load. For any given cold load pickup capability, the resulting settings will provide faster protection at high fault currents with the extremely inverse relay than with the less inverse relays.

The operating time of the time overcurrent unit for any given value of current and tap setting is determined by the time dial setting. This operating time is inversely proportional to the current magnitude as illustrated by the time curves in Figs. 11, 12 and 13. Note that the current values on these curves are given as multiples of the tap setting. That is, for a given time dial setting, the time will be the same for 80 amperes on the eight ampere tap as for 50 amperes on the five ampere tap, since in both cases, the current is ten times tap setting.

If selective action of two or more relays is required, determine the maximum possible short-circuit current of the line and then choose a time value for each relay that differs sufficiently to insure the proper sequence in the operation of the several circuit breakers. Allowance must be made for the time involved in opening each breaker after the relay contacts close.

The instantaneous cup unit is torque controlled by the directional unit. When it is used for direct tripping, it will only be necessary when determining a setting to consider the maximum current that the instantaneous unit will see for a fault at the remote terminal. The instantaneous cup unit has low transient overreach. It should be set with a margin of at least 10 percent above the maximum current for a remote fault neglecting transient overreach.

The Y1A relays contain a Hi-Seismic instantaneous overcurrent unit. This unit may be set high to provide direct tripping for heavy internal faults. In determining the setting for this unit when it is used for direct tripping, it will be necessary to consider the maximum external fault for faults at each end of the line because the unit is non-directional. The unit should be set with a suitable margin above the maximum external fault taking into account the effects of transient overreach as illustrated in Fig. 16.

The red jumper leads between studs 18 and 19 and 19 and 20 are located inside the case on the cradle block and may be removed to provide external torque control of the time overcurrent unit (TOC) and the instantaneous overcurrent unit (IOC) respectively. If external torque control of either or both units is

required, remove the red jumper lead associated with the unit(s) to be controlled, and connect the external control contacts between the appropriate studs. Note that the units will still be torque controlled by the directional unit in addition to the external control.

RATINGS

Ratings of the operating current circuits of the TOC (time overcurrent), directional controlled IOC (instantaneous overcurrent) and the directional units are shown individually. However, since all operating current circuits are normally connected in series, the operating coil ratings of all three units should be considered in determining the rating of the entire operating circuit.

TIME OVERCURRENT UNIT

The one second ratings of the TOC units, relay terminals 2 and 4, are all 260 amperes. The available taps and the continuous ratings are shown in Tables 2, 3 and 4. Note that separate tables are given for the JBCV51, JBCV53 and JBCV77 models.

TABLE 2

CONTINUOUS RATING OF INVERSE TIME OVERCURRENT UNIT

2.0 - 16.0 AMP RANGE JBCV51											
TAP	2.0	2.5	3.0	4.0	5.0	6.0	7.0	8.0	10.0	12.0	16
RATING	8.0	9.0	10.0	12.0	14.0	15.0	16.0	17.5	20.0	20.0	20.0

TABLE 3

CONTINUOUS RATING OF VERY INVERSE TIME OVERCURRENT UNIT

1.5 - 12.0 AMP RANGE JBCV53											
TAP	1.5	2.0	2.5	3.0	4.0	5.0	6.0	7.0	8.0	10.0	12.0
RATING	10	11.5	13.0	14.5	17.0	19.0	21.0	23.0	23.5	27.5	30.5

TABLE 4

CONTINUOUS RATING OF EXTREMELY INVERSE TIME OVERCURRENT UNIT

1.5 - 12.0 AMP RANGE JBCV77											
TAP	1.5	2.0	2.5	3.0	4.0	5.0	6.0	7.0	8.0	10.0	12.0
RATING	9.5	10.5	11.5	12.5	14.0	15.5	17.0	18.0	19.0	20.0	20.0

INSTANTANEOUS OVERCURRENT UNIT (DIRECTIONALLY CONTROLLED)

Ranges and ratings of the IOC units, relay terminals 2 and 3 are shown in Table 5. The operating coils have dual ratings obtained by series or parallel connections.

TABLE 5

CONTINUOUS AND ONE SECOND RATINGS OF DIRECTIONALLY CONTROLLED IOC UNIT

Total Range (Amps)	Connections	Pickup Range Amps	Continuous Rating (Amps)	One Second Rating (Amps)
2-16	Series Parallel	2-8 4-16	5.0 6.5	200 260
10-80	Series Parallel	10-40 20-80	9.0 15.0	220 260

DIRECTIONAL UNIT

The directional unit operating coil, relay terminals 5 and 6, has a five ampere continuous rating and a 200 ampere one second rating. The potential polarizing circuit, terminals 7 and 8, and the restraint circuit, terminals 9 and 10, are continuously rated.

INSTANTANEOUS UNIT (NON-DIRECTIONALLY CONTROLLED)

The instantaneous unit coil is tapped for operation on either one of two ranges (H or L). Selection of the high or low range is determined by the position of leads T and E at terminal 15. See Table 6 and the applicable interntal connections referenced in Table 1. For the H range, connect lead T to terminal 15 and lead E to the auxiliary terminal that is mounted on terminal 15. For range L, reverse leads T and E.

TABLE 6

CONTINUOUS AND ONE SECOND RATINGS OF NON-DIRECTIONALLY CONTROLLED IOC UNIT

Instantaneous Unit (Amps)	Range	** Range (Amps)	Continuous Rating (Amps)	One Second Rating (Amps)
6 - 150	L	6 - 30	10.2	260
	H	30 - 150	19.6	

**The range is approximate, which means that 6-30, 30-150 may be 6-28, 28-150. There will always be at least one ampere overlap between the maximum L setting and the minimum H setting. Whenever possible, always select the higher range, since it has the higher continuous rating.

TARGET AND SEAL-IN UNIT

The rating and impedance of the seal-in unit for the 0.2 and 2 ampere taps are given in Table 7. The tap setting used will depend on the current drawn by the trip coil.

The 0.2 ampere tap is for use with trip coils which operate on currents ranging from 0.2 up to 2.0 amperes, at the minimum control voltage. If this tap is used with trip coils requiring more than two amperes, there is a possibility that the resistance of seven ohms will reduce the current to so low a value that the breaker will not be tripped.

The two ampere tap should be used with trip coils that take two amperes or more at minimum control voltage, provided the current does not exceed 30 amperes at the maximum control voltage. If the tripping current exceeds 30 amperes, the connections should be arranged so that the induction unit contacts will operate an auxiliary relay which in turn energizes the trip coil or coils. On such an application, it may be necessary to connect a loading resistor in parallel with the auxiliary relay coil to allow enough current to operate the target seal-in unit.

TABLE 7

SEAL-IN UNIT RATINGS

	TAP	
	0.2	2.0
DC RESISTANCE ± 10% (OHMS)	7	0.13
MIN. OPERATING (AMPERES) + 0-25%	0.2	2.0
CARRY CONT. (AMPERES)	0.3	3.0
CARRY 30 AMPS FOR (SEC.)	0.03	4.0
CARRY 10 AMPS FOR (SEC.)	0.25	30.0
60 HZ IMPEDANCE (OHMS)	52.0	0.53

CONTACTS

The current-closing rating of the induction unit contacts is 30 amperes for voltages not exceeding 250 volts. Their current-carrying rating is limited by the tap rating of the seal-in unit.

OPERATING CHARACTERISTICS

PICKUP

At rated voltage and maximum torque angle, the directional unit will pick up at 9 ± 10 percent amperes. At restraint voltages less than rated, the operating current is also less. This relationship is shown by the curve in Fig. 10.

Pickup of the TOC units is defined as the current required to close the contacts from the 0.5 time dial position. The pickup value is within five percent of tap value.

The pickup of the directionally controlled IOC unit can be adjusted over an eight-to-one range as indicated in Table 5.

RESET (TIME OVERCURRENT UNIT)

Inverse time overcurrent units reset at 90 percent of the minimum pickup current, very inverse time units at 80 percent and extremely inverse time units at 85 percent.

When the relay is de-energized, the time required for the disk to completely reset to the number 10 time dial position is approximately six seconds for inverse time relays and 60 seconds for very inverse-time and extremely inverse-time relays.

OPERATING TIME

The time curves of the TOC units are shown in Figs. 11, 12 and 13 respectively for inverse-time, very inverse-time and extremely inverse-time relays. For the same operating conditions, the relay will operate repeatedly within one or two percent of the same time.

The time curves for the directionally controlled IOC units are shown in Fig. 14.

The time-current characteristic of the Hi-Seismic non-directionally controlled IOC unit is shown by Fig. 15 and its transient overreach characteristic is shown by Fig. 16.

BURDENS

Tables 8 and 9 give the directional unit burdens of the potential and current circuits respectively. Table 10 gives the total burden of the time overcurrent unit plus the instantaneous overcurrent unit.

TABLE 8

DIRECTIONAL UNIT POTENTIAL CIRCUIT

BURDENS AT 60 CYCLES AND RATED VOLTS

CIRCUIT	VOLT AMPERES	POWER FACTOR	WATTS
Polarizing	15.2	0.93	14.1
Restraint	5.9	0.66	3.9

TABLE 9

DIRECTIONAL UNIT CURRENT CIRCUIT

BURDENS AT 60 CYCLES AND 5 AMPS

IMPED. (OHMS)	VOLT-AMPERES	POWER FACTOR	WATTS
0.12	3.00	0.52	1.56

TABLE 10

BURDENS OF OVERCURRENT UNITS (TIME AND INSTANTANEOUS) AT 60 CYCLES

TIME CHARACTER-ISTIC	RANGE		IOC UNIT CONNECTIONS	BURDENS AT MIN. PICKUP MIN. TAP OF TOC UNIT					BURDEN OHMS (Z)		‡VA
	TOC UNIT	IOC UNIT		R	J_X	**Z	+VA	P.F.	3 TIMES MIN. P.U.	10 TIMES MIN. P.U.	AT 5 AMPS
Inverse	2-16	2-16	Series 2-8	0.61	2.01	2.10	8.4	0.29	1.27	0.85	53
			Parallel 4-16	0.42	1.54	1.60	6.4	0.26	0.76	0.43	40
		10-80	Series 10-40	0.45	1.58	1.65	6.6	0.27	0.81	0.48	41
			Parallel 20-80	0.38	1.45	1.50	6.0	0.25	0.67	0.34	38
Very Inverse	1.5-12	2-16	Series 2-8	0.47	1.10	1.20	2.7	0.39	1.20	0.53	30
			Parallel 4-16	0.28	0.63	0.69	1.6	0.41	0.69	0.47	17
		10-80	Series 10-40	0.31	0.67	0.74	1.7	0.42	0.74	0.52	19
			Parallel 20-80	0.24	0.54	0.59	1.3	0.41	0.59	0.38	15
Extremely Inverse	1.5-12	2-16	Series 2-8	0.33	0.72	0.79	1.8	0.42	0.79	0.70	20
			Parallel 4-16	0.13	0.25	0.28	0.6	0.46	0.28	0.28	7
		10-80	Series 10-40	0.16	0.29	0.33	0.7	0.49	0.33	0.33	8
			Parallel 20-80	0.10	0.16	0.19	0.4	0.53	0.19	0.19	5

**The impedance values given are those for the minimum tap of each relay. The impedance for other taps, at pickup current (tap rating), varies inversely approximately as the square of the current rating. Example: for the very inverse relays, 1.5/12 amperes, with impedance of the 1.5 ampere tap of 1.20 ohms, the impedance of the three ampere tap, at three amperes, is approximately $(1.5/3)^2 \times 1.20 = 0.3$ ohms.

+Some companies list relay burdens only as the volt-ampere input to operate at minimum pickup. This column is included so a direct comparison can be made. It should not be used in calculating volt-ampere burdens in a CT secondary circuit, since the burden at five amperes is used for this purpose.

‡Calculated from burden at minimum pickup.

TABLE 11

BURDEN OF NON-DIRECTIONALLY CONTROLLED INSTANTANEOUS UNIT

Inst. Unit (Amps)	HZ	Range	Range (Amps)	Min. Pickup (Amps)	Burdens at Min. Pickup (Ohms)			Burdens Ohms (Z) Times Pickup		
					R	J_X	Z	3	10	20
6-150	60	L	6-30	6	0.110	0.078	0.135	0.095	0.081	0.079
		H	30-150	30	0.022	0.005	0.023	0.022	0.022	0.022

CONSTRUCTION

Type JBCV relays are single phase, directional overcurrent relays with voltage restraint. They are available with inverse, very inverse or extremely inverse time-current characteristics. The JBCV relays consist of three main units, an instantaneous overcurrent unit (top) of the induction-cup type, a time overcurrent unit (middle) of the induction-disk type, and an instantaneous power-directional unit (bottom) of the induction-cup type. The directional unit is potential polarized and, by means of its closing contacts, directionally controls the operation of both the time overcurrent and instantaneous overcurrent units. All units are mounted in the L2, (large double-ended) drawout case. The IOC (instantaneous overcurrent) unit and the TOC (time overcurrent) unit each have an associated target and seal-in unit. The JBCV53M(-)Y1A, as shown by Table 1, has an additional IOC unit which is of the hinged armature type.

DIRECTIONAL UNIT

The directional unit is of the induction-cylinder construction with a laminated stator having eight poles projecting inward and arranged symmetrically around a stationary control core. The cup-like aluminum induction rotor is free to operate in the annular air gap between the poles and the core. The poles are fitted with voltage restraint, current operating, and potential polarizing coils.

The principle by which torque is developed is the same as that of an induction disk relay with a wattmetric element, although, in arrangement of parts, the unit is more like a split-phase induction motor. The induction-cylinder construction provides higher torque and lower rotor inertia than the induction-disk construction, resulting in a faster and more sensitive relay.

Low Gradient Contact

The directional unit contacts (left front), which control the time overcurrent unit are shown in Fig. 17. They are of the low gradient type specially constructed to minimize the effects of vibration. Both the stationary and moving contact brushes are made of low gradient material which, when subjected to vibration, tend to follow one another, hence, they resist contact separation.

The contact dial (A) supports the stationary contact brush (B) on which is mounted a conical contact tip (C). The moving contact arm (D) supports the moving contact brush (E) on which is mounted a button contact tip (F). The end of the moving contact brush bears against the inner face of the moving contact brush retainer (G). Similarly, the end of the stationary contact brush bears against the inner face of the stationary contact brush retainer (H). The stationary contact support (K) and the contact dial are assembled together by means of a mounting screw (L) and two locknuts (M).

Barrel Contact

The directional unit contacts (right rear), which control the instantaneous overcurrent unit, are shown in Fig. 18. They are specially constructed to suppress bouncing. The stationary contact (G) is mounted on a flat spiral spring (F) backed up by a thin diaphragm (C). These are both mounted in a slightly inclined tube (A). A stainless steel ball (B) is placed in the tube before the diaphragm is assembled. When the moving contact hits the stationary contact, the energy of the former is imparted to the latter and thence to the ball, which is free to roll up the inclined tube. Thus, the moving contact comes to rest with substantially no rebound or vibration. To change the stationary contact mounting spring, remove the contact barrel and sleeve as a complete unit after loosening the screw at the front of the contact block. Unscrew the cap (E). The contact and its flat spiral mounting spring may then be removed.

TIME OVERCURRENT UNIT

The inverse time and very inverse time overcurrent units consist of a tapped current operating coil wound on a U-magnet iron structure. The tapped operating coil is connected to taps on the tap block. The U-magnet contains wound shading coils which are connected in series with a directional unit contact. When power flow is in such a direction as to close the directional unit contacts, the shading coils act to produce a split-phase field which, in turn, develops torque on the operating disk.

The extremely inverse time overcurrent unit is of the wattmetric type similar to that used in watthour meters except as follows: the upper portion of the iron structure has two concentric windings on the middle leg of the magnetic circuit. One of these is a tapped current winding connected to taps on the tap block; the other is a floating winding which is connected in series with the directional unit contacts, a resistor, a capacitor and the two coils on the lower legs of the magnetic circuit. When power is in such a direction as to close a directional unit contact, the unit develops torque on the operating disk.

The disk shaft carries the moving contact which completes the trip circuit when it touches the stationary contact or contacts. The shaft is restrained by a spiral spring to give the proper contact-closing current, and its motion is retarded by a permanent magnet acting on the disk to produce the desired time characteristic. The variable retarding force resulting from the gradient of the spiral spring is compensated by the spiral shape of the induction disk, which results in an increased driving force as the spring winds up.

The torque control circuits of both the time overcurrent and instantaneous overcurrent units are wired to terminals on the relay contact block. These terminals are shorted together by internally connected red jumper leads when the relays leave the factory (see Figs. 5 to 7 inclusive). If external torque control is desired, these jumper leads should be removed.

TARGET AND SEAL-IN UNITS

The seal-in units for both the TOC and IOC contacts of the JBCV51M, JBCV53M and JBCV77M relays are mounted on the IOC middle unit. On the JBCV53M(-)Y1A relay the right hand seal-in unit is replaced by the non-directionally controlled IOC unit and the seal-in unit is moved to the left side of the directional (lower) unit.

The left seal-in unit operates in conjunction with the time overcurrent unit contacts and is labeled "TIME". Its coil is in series and its contacts in parallel with the main contacts of the time overcurrent unit so that when the main contacts close, the seal-in unit will pick up and seal in around the main contact.

The right seal-in unit, labeled "INST." operates in conjunction with the instantaneous overcurrent unit. Its coil is in series with the instantaneous unit contact and a contact of the directional unit, and its contact is connected to seal in around these two contacts when the unit operates.

Both seal-in units are equipped with targets which are raised into view when the unit operates. These targets latch and remain exposed until manually released by means of the button projecting below the lower-left corner of the cover.

INSTANTANEOUS OVERCURRENT UNIT (DIRECTIONALLY CONTROLLED)

The instantaneous overcurrent unit is similar in construction to the directional unit described above, differing only in coil turns and connections. The four corner coils consist of two windings, an inner winding consisting of a large number of turns of fine wire, and an outer winding having a few turns of heavy wire. The outer windings of the corner coils are connected either in series or in parallel with the side coils by tap links provided on the relay; these series or parallel combinations are connected in series with the operating coil of the TOC unit. The inner windings of the corner coils are all connected in series, and in turn are connected in series with a capacitor and a contact of the directional unit. This circuit thus controls the torque of the instantaneous overcurrent unit. When the directional unit contacts are open, the instantaneous overcurrent unit will develop no torque. When the directional unit contacts are closed, the instantaneous overcurrent unit will develop torque in proportion to the square of the current.

The instantaneous overcurrent unit develops operating torque in a direction opposite to that of the directional unit. This makes the relay less susceptible to the effects of shock.

INSTANTANEOUS UNIT (NON-DIRECTIONALLY CONTROLLED)

This IOC unit is a small hinged armature type instantaneous element and is mounted on the right side of the TOC unit. The IOC element operates over a 25-to-one total range obtained by using a tapped coil which has a five-to-one low range and a five-to-one high range; this combination provides the 25-to-one total range. When the current reaches a predetermined value, the instantaneous element operates closing its contact circuit and raising its target into view. The target latches in the exposed position until it is released. The same button that releases the target seal-in unit also releases the target of the instantaneous unit.

RECEIVING, HANDLING AND STORAGE

These relays, when not included as part of a control panel will be shipped in cartons designed to protect them against damage. Immediately upon receipt of a relay, examine it for any damage sustained in transit. If injury or damage resulting from rough handling is evident, file a damage claim at once with the transportation company and promptly notify the nearest General Electric Apparatus Sales Office.

Reasonable care should be exercised in unpacking the relay in order that none of the parts are injured or the adjustments disturbed.

If the relays are not to be installed immediately, they should be stored in their original cartons in a place that is free from moisture, dust and metallic chips. Foreign matter collected on the outside of the case may find its way inside when the cover is removed and cause trouble in the operation of the relay.

ACCEPTANCE TESTS

Immediately upon receipt of the relay an inspection and acceptance test should be made to ensure that no damage has been sustained in shipment and that the relay calibrations have not been disturbed. If the examination or test indicates that readjustment is necessary, refer to the section on SERVICING.

These tests may be performed as part of the installation or acceptance tests at the discretion of the user.

Since most operating companies use different procedures for acceptance and installation tests, the following section includes all applicable tests that may be performed on these relays.

VISUAL INSPECTION

Check the nameplate stamping to ensure that the model number and rating of the relay agree with the requisition.

Remove the relay from its case and check that there are no broken or cracked molded parts or other signs of physical damage and that all screws are tight. Check that the shorting bars are in the proper location(s) as shown by the internal connections diagram, Figs. 5 to 7 inclusive and that the main brush is properly formed to contact the shorting bar.

MECHANICAL INSPECTION

Top Unit (IOC)

1. The rotating shaft end play should be 0.015-0.020 inch.
2. The contact gap should be 0.028-0.036 inch.
3. There should be no noticeable friction in the rotating structure.
4. With the relay well leveled and in its upright position, the contact should be open and resting against the backstop.

Middle Unit (TOC)

1. The disk shaft end play should be 0.005-0.015 inch.
2. The disk should be centered in the air gaps of both the electromagnet and drag magnet.
3. Both air gaps should be free of foreign matter.

4. The disk should rotate freely and should return by itself to the reset position.
5. The moving contact should just touch the stationary contact when the time dial is at the zero time dial position.

Bottom Unit (DIR)

1. The rotating shaft end play should be 0.015-0.020 inch.
2. The contact gap should be 0.015-0.025 inch on the low gradient front contact.
3. The front contact should close approximately 0.005 to 0.010 inch before the rear contacts.

Target and Seal-in Units/Instantaneous Unit

1. The armature and contacts should move freely when operated by hand.
2. Both contacts should make at approximately the same time.
3. The target should latch into view just as the contacts make and should unlatch when the target release button is operated.
4. The contacts should have approximately 0.030 inch wipe.

DRAWOUT RELAYS GENERAL

Since all drawout relays in service operate in their cases, it is recommended that they be tested in their case or an equivalent steel case. In this way, any magnetic effects of the enclosure will be accurately duplicated during testing. A relay may be tested without removing it from the panel by using two 12XLA13A test plugs. This plug makes connections only with the relay and does not disturb any shorting bars in the case. The 12XLA12A test plug may also be used. Although this test plug allows greater testing flexibility, it requires CT shorting jumpers and the exercise of greater care, since connections are made to both the relay and the external circuitry.

POWER REQUIREMENTS GENERAL

All alternating current operated devices are affected by frequency. Since non-sinusoidal waveforms can be analyzed as a fundamental frequency plus harmonics of the fundamental frequency, it follows that alternating current devices (relays) will be affected by the applied waveform.

Therefore, in order to properly test alternating current relays it is essential to use a sine wave of current and/or voltage. The purity of the sine wave (i.e., its freedom from harmonics) cannot be expressed as a finite number for any particular relay, however, any relay using tuned circuits, R-L or RC networks, or saturating electromagnets (such as time overcurrent relays) is affected by non-sinusoidal wave forms.

TARGET AND SEAL-IN UNITS

The target and seal-in unit has an operating coil tapped at 0.2 and 2.0 amperes.

When used with trip coils operating on currents ranging from 0.2 to 2.0 amperes at the minimum control voltage, the target and seal-in tap screw should be set in the 0.2 ampere tap. When the trip coil current ranges from two to 30 amperes at the minimum control voltage, the tap screw should be placed in the 2.0 ampere tap.

The seal-in tap screw is the screw holding the right-hand stationary contact of the seal-in unit. To change the tap setting, first remove the connecting plug. Then take a screw from the left-hand stationary contact and place it in the desired tap. Next, remove the screw from the other tap and place it back in the left-hand contact. This procedure is necessary to prevent the right-hand stationary contact from getting out of adjustment. Tap screws should never be left in both taps at the same time.

Pickup and Dropout Test

1. Connect relay studs 1 and 11 or 1 and 12 (see internal connections diagram) to a DC source, ammeter and load box so that the current can be controlled over a range of 0.1 to 2.0 amperes.
2. Close or jumper the contact(s) that parallel the seal-in unit contact.
3. Increase the current slowly until the seal-in unit picks up. See Table 12.
4. Open the parallel contact circuit of step 2; the seal-in unit should remain in the picked up position.
5. Decrease the current slowly until the seal-in unit drops out. See Table 12.

TABLE 12

TARGET AND SEAL-IN UNIT OPERATING CURRENTS

TAP	PICKUP CURRENT	DROPOUT CURRENT
0.2	0.115-0.195	0.05 OR MORE
2.0	1.15 -1.95	0.50 OR MORE

TIME OVERCURRENT UNIT

Rotate the time dial slowly and check by means of a lamp that the contacts just close at the zero time dial setting.

Where the contacts just close can be adjusted by running the stationary contact brush in or out by means of its adjusting screw. This screw should be held securely in its support.

With the contacts just closing at No. 0 time setting, there should be sufficient gap between the stationary contact brush and its metal backing strip to ensure approximately 1/32 inch wipe.

Current Setting

The minimum current at which the time overcurrent unit will close its contacts is determined by the position of the plug in the tap block. The tap plate on this block is marked in amperes, as shown in Tables 2, 3 and 4.

When the tap setting is changed with the relay in service, the following procedure must be followed: (1) remove the connecting plug; this de-energizes the relay and shorts the current transformer secondary winding. (2) remove the tap screw and place it in the tap marked for the desired pickup current. (3) Replace the connecting plug.

The minimum current required to rotate the disk slowly and to close the contacts should be within five percent of the value marked on the tap plate for any tap setting and time dial position. If this adjustment has been disturbed, it can be restored by means of the spring adjusting ring. The ring can be turned by inserting a screw driver blade in the notches around the edge. By turning the ring, the operating current of the unit can be brought into agreement with the tap setting employed. This adjustment also permits any desired setting to be obtained intermediately between the available tap settings.

Pickup adjustment by means of the control spring applies to the JBCV51 and JBCV53 relays. A different procedure applies to the JBCV77 relay. For the JBCV77 relay, the pickup of the unit for any current tap setting is adjusted by means of the variable resistor in the phase-shifting circuit. This adjustment also permits any desired setting intermediately between the various tap settings to be obtained. The control spring is prewound approximately 660 degrees with the contacts just closed. Further adjustment of this setting is seldom required; if it is required, because of insufficient range of the variable resistor, it should never be necessary to wind up the control spring adjuster more than 30 degrees (one notch) or unwind it more than 90 degrees (three notches) from the factory setting.

Test connections for making pickup and time checks on the time overcurrent unit are shown in Fig. 20. Use a source of 120 volts or greater with good wave form and constant frequency. Stepdown transformers or phantom loads should not be employed in testing induction relays since their use may cause a distorted wave form. The contact in the wound shading coil circuit marked D, see internal connections diagram, must be blocked closed or jumpered for both the pickup test and the time test.

Time Setting

The setting of the time dial determines the length of time the unit requires to close its contacts when the current reaches a predetermined value. The contacts are just closed when the dial is set on zero. When the dial is set on 10, the disk must travel the maximum amount to close the contacts and therefore this setting gives the maximum time setting.

The primary adjustment for the time of operation of the unit is made by means of the time dial. However, further adjustment is obtained by moving the permanent magnet along its supporting shelf; moving the magnet toward the disk shaft decreases the time, while moving it away increases the time. Be sure the magnet never extends out beyond the cutout in the disk.

Pickup Test

Use rated frequency for both the pickup and time tests.

Set the relay at the 0.5 time dial position and 2.0 ampere tap. Using the test connections in Fig. 20 the main unit should close its contacts within ±2.0 percent of tap value current (1.96-2.04 amps).

Time Test

Set the relay at No. 5 time dial setting and the 2.0 amp tap. Using the test connections of Fig. 20, apply five times tap current (10.0 amp) to the relay. The relay should operate within the limits shown in Table 13.

TABLE 13

TOC UNIT OPERATING TIME LIMITS

Relay Type	Time in Seconds		
	Min.	Midpoint	Max.
JBCV51	1.72	1.78	1.83
JBCV53	1.27	1.31	1.35
JBCV77	0.89	0.92	0.95

DIRECTIONAL UNIT

Polarity Check

The polarity of the external connections to the operating and polarizing circuits of the directional unit may be verified by disconnecting the external connections to the restraint circuit and observing the direction of contact armature torque when the line is carrying load at unity power factor, or slightly lagging power factor. Note that in most directional overcurrent relay applications, the desired directions are: contact closing for power flow away from the bus, and contact opening for power flow toward the bus.

In case of doubt, refer to Fig. 21 for a more accurate method of checking the polarity of the external connections to the operating and polarizing circuits. Note that, during this test, the restraint circuit is automatically disconnected by means of the test plug.

The polarity of the restraint circuit is automatically checked when it is reconnected, or when the test plug is removed and the connection plug is reinserted. With normal load and rated voltage, the restraint circuit should always cause the directional unit contacts to open regardless of the direction of power flow.

Fig. 22 shows the test connections for checking the polarity of the directional unit itself.

INSTANTANEOUS OVERCURRENT UNIT (DIRECTIONALLY CONTROLLED)

Pickup Setting

The pickup of the instantaneous overcurrent unit can be adjusted over an eight-to-one range, as indicated in Table 5, by varying the tension of the spiral control spring and by selection of the appropriate series or parallel connections. The outside end of this spring is fastened to a post on the adjusting ring above the moving contact, and the ring is in turn clamped in position by a hexagonal-head locking screw. If this screw is loosened, the ring can be slipped to vary the spring tension.

Make test connections as shown for the applicable relay type by Fig. 23. In adjusting pickup, the desired pickup current should be passed through the coils and the control spring should be adjusted until the contact just closes. The adjusting ring should then be locked in position and the pickup current rechecked. Note that the directional-unit contacts must be held closed during this adjustment.

INSTANTANEOUS UNIT (NON-DIRECTIONALLY CONTROLLED)

Make sure that the instantaneous unit is in the correct range in which it is to operate. See the internal connections diagram and Table 6. Whenever possible, use the higher range since the higher range has a higher continuous rating.

The instantaneous unit has an adjustable core located at the top of the unit. To set the instantaneous unit to a desired pickup, loosen the locknut and adjust the core. Turning the core clockwise decreases the pickup, turning the core counterclockwise increases the pickup. Bring up the current slowly until the unit picks up. It may be necessary to repeat this operation, until the desired pickup value is obtained. Once the desired pickup value is reached, tighten the locknut.

CAUTION - Refer to Table 6 for the continuous and one second ratings of the instantaneous unit. Do not exceed these ratings when applying current to the instantaneous unit.

The range of the instantaneous unit (See Table 6) must be obtained between a core position of 1/8 of a turn of full clockwise and 20 turns counterclockwise from the full clockwise position.

INSTALLATION

LOCATION

The location should be clean and dry, free from dust and excessive vibration and well lighted to facilitate inspection and testing.

MOUNTING

The relay should be mounted on a vertical surface. The outline and panel drilling diagram is shown in Fig. 24.

CONNECTIONS

The internal connection diagrams for the various relays are shown in Figs. 5 to 7. Typical wiring diagrams are shown by Figs. 8 and 9. Since phase sequence is important for the correct operation of Type JBCV relays, the rotation specified in Figs. 8 and 9 must be adhered to. Unless mounted on a steel panel which adequately grounds the relay case, it is recommended that the case be grounded through a mounting stud or screw with a conductor not less than #12 B&S gage copper wire or its equivalent.

Terminal 12 of JBCV relays should be connected to the negative side of the DC bus.

INSPECTION

At the time of installation, the relay should be inspected for tarnished contacts, loose screws, or other imperfections. If any trouble is found, it should be corrected in the manner described in the section on SERVICING.

CAUTION

Every circuit in the drawout case has an auxiliary brush. It is especially important on current circuits and other circuits with shorting bars that the auxiliary brush be bent high enough to engage the connecting plug or test plug before the main brushes do. This will prevent CT secondary circuits from being opened. Refer to Fig. 19.

OPERATION

Before the relay is put into service, it should be given a check to determine that factory adjustments have not been disturbed. The time dial will be set at zero before the relay leaves the factory. If the setting has not been changed, it will be necessary to change this setting in order to open the time overcurrent unit contacts. The following tests are suggested:

TARGET AND SEAL-IN UNITS

1. Make sure that the tap screw is in the desired tap.
2. Perform pickup and dropout tests as outlined in the ACCEPTANCE TESTS section.

TIME OVERCURRENT UNIT

1. Set the tap screw on the desired tap. Using the test circuit in Fig. 20, apply approximately twice tap value current until the contacts just close. Reduce the current until the light in series with the contacts begins to flicker. This value of current should be within five percent of tap value.
2. Check the operating time at some multiple of tap value. This multiple of tap value may be five times tap rating or the maximum fault current for which the relay must coordinate. The value used is left to the discretion of the user.

DIRECTIONAL UNIT

Check directional unit polarity; see ACCEPTANCE TESTS.

INSTANTANEOUS OVERCURRENT UNIT (DIRECTIONALLY CONTROLLED)

Check pickup setting; see ACCEPTANCE TESTS.

INSTANTANEOUS UNIT (NON-DIRECTIONALLY CONTROLLED)

1. Select the desired range by making the proper connections at the rear of the relay (see internal connections diagram). Whenever possible, always select the higher range since it has a higher continuous rating.
2. Set the instantaneous unit to pick up at the desired current level. See the ACCEPTANCE TESTS section.

PERIODIC CHECKS AND ROUTINE MAINTENANCE

In view of the vital role of protective relays in the operation of a power system, it is important that a periodic test program be followed. It is recognized that the interval between periodic checks will vary depending upon environment, type of relay and the user's experience with periodic testing. Until the user has accumulated enough experience to select the test interval best suited to his individual requirements, it is suggested that the points listed below be checked at an interval of from one to two years.

These tests are intended to ensure that the relays have not deviated from their original setting. If deviations are encountered, the relay must be retested and serviced as described in this manual.

TARGET AND SEAL-IN UNITS

1. Check that the unit picks up at the values shown in Table 12.
2. Check that the unit drops out at 25 percent or more of tap value.

TIME OVERCURRENT UNIT

1. Perform pickup test as described in the INSTALLATION section for the tap in service.
2. Perform the time tests as described in the INSTALLATION section.

DIRECTIONAL UNIT

Check condition and operation of contacts. A polarity check should not be necessary if it was correctly installed and no subsequent wiring changes were made.

INSTANTANEOUS OVERCURRENT UNIT (DIRECTIONALLY CONTROLLED)

Check that the instantaneous unit picks up at the desired current level as outlined in the ACCEPTANCE TEST section.

INSTANTANEOUS UNIT (NON-DIRECTIONALLY CONTROLLED)

Check that the instantaneous unit picks up at the desired current level, as outlined in the ACCEPTANCE TESTS and the INSTALLATION TEST sections.

SERVICING

These relays are adjusted at the factory and it is advisable not to disturb the adjustments. If, for any reason, they have been disturbed or it is found during installation or periodic testing that the relay is out of limits, the checks and adjustments outlined in the following paragraphs should be observed. It is suggested that this work be done in the laboratory.

TARGET AND SEAL-IN UNITS

Repeat the visual and mechanical inspections and the pickup and dropout current checks as outlined in the ACCEPTANCE TESTS section.

TIME OVERCURRENT UNIT

Disk and Bearings

The jewel should be turned up until the disk is centered in the air gaps, after which it should be locked in this position by the set screw provided for this purpose. The upper bearing pin should next be adjusted so that the disk shaft has about 1/64 inch end play.

Contact Adjustment

The contacts should have about 1/32 inch wipe. That is, the stationary contact tip should be deflected about 1/32 inch when the disk completes its travel. Wipe is adjusted by turning the wipe adjustment screw thereby adjusting the position of the brush relative to the brush stop.

When the time dial is moved to the position where it holds the contacts just closed, it should indicate zero on the time-dial scale. If it does not and the brushes are correctly adjusted, shift the dial by changing the position of the arm attached to the shaft just below the time dial. Loosen the screw clamping the arm to the shaft and turn the arm relative to the shaft until the contacts just make for zero time-dial setting.

Characteristics Check and Adjustment

Repeat the portions of the ACCEPTANCE TESTS section that apply to the time overcurrent unit. Also, check reset voltage and time as outlined under RESET in the CHARACTERISTICS section; low reset voltages or long reset times may indicate excessive friction caused by a worn bearing or by mechanical interference.

On JBCV77 relays, set the relay on the two-amp tap with the time dial set so that the contacts are just open. Adjust pickup within the limits 1.96 to 2.04 amp but as close as possible to 2.0 amps. Then move the time dial to the No. 10 position and check the current required to just move the disk away from the stop arm. This current should be within the limits 1.88 to 2.12 amp. If the disk moves at the lower limit, check that movement is not over 1/2 inch measured along the periphery of the disk. This is called a compensation check. If the current falls outside the 1.88 to 2.12 amp limits, the following steps should be taken: reset the control spring until compensation at No. 10 time dial is within limits. Then restore pickup by adjusting the resistor. Recheck compensation after the resistor adjustment.

DIRECTIONAL UNIT

Bearings

The lower jewel bearing should be screwed all the way in until its head engages the end of the threaded core support. The upper bearing should be adjusted to allow about 1/64 inch end play in the shaft.

To check the clearance between the iron core and the inside of the rotor cup, press down on the contact arm near the shaft thus depressing the spring-mounted jewel until the cup strikes the iron. The shaft should move about 1/16 inch.

Cup and Stator

Should it be necessary to remove the cup-type rotor from the directional unit, the following procedure should be followed:

All leads to the unit should first be disconnected and tagged for identification in reconnecting. The unit can then be removed from the cradle with its mounting plate still attached.

The upper of the three flat-head screws holding the unit to the plate should now be removed. On some models, it may be necessary to remove a resistor or capacitor to expose this screw. The four corner screws clamping the unit together, should next be removed, and the entire top structure lifted off. This gives access to the cup assembly and exposes the stator assembly, which should be protected to keep it free from dust and metallic particles until the unit is reassembled.

To remove the shaft and rotor from the contact head assembly, the spring clip at the top of the shaft must be pulled out and the clutch adjusting screw taken out of the side of the molded contact arm. The shaft and cup can now be pulled out of the molding. The rotor must be handled very carefully while it is out of the unit.

Contact Adjustments

To facilitate adjustment of contacts, remove the two red jumper leads from terminals 18, 19 and 20 and use a neon indicating lamp in series with an AC voltage supply across terminals 18 and 19 and 19 and 20 to signify all contact closures. Refer to Fig. 18 and Fig. 17 for identification of barrel and low gradient contact parts respectively and proceed as follows:

Loosen slightly the screw which secures the barrel backstop (located at the right front corner of the unit) to its support. This screw should be only loose enough to allow the barrel to rotate in its sleeve but not so loose as to allow the sleeve to move within the support. Unwind the barrel backstop so that the moving contact arm is permitted to swing freely. Adjust the tension of each low gradient contact brush so that one-to-two grams of pressure are required at the contact tip in order to cause the end of the brush to separate from the inner face of its respective brush retainer. Adjust the spiral spring until the moving contact arm is in a neutral position, i.e., with the arm pointing directly forward. Loosen the locknut which secures the low gradient stationary contact mounting screw to the stationary contact support. Wind the mounting screw inward until the low gradient stationary and moving contact members just begin to touch. Unwind the mounting screw until the stationary contact brush is vertical with the stationary contact brush retainer down. Then tighten the locknut which secures the mounting screw to the stationary contact support.

Loosen slightly the screw which secures the barrel contact to its support. This screw should be only loose enough to allow the barrel to rotate in its sleeve, but not so loose as to allow the sleeve to move within the support. Wind the barrel backstop in until the low gradient moving and stationary contact members just begin to touch. Wind the barrel contact in until the barrel contacts just begin to touch. Unwind the barrel contact one-quarter turn. Tighten the screw which secures the barrel contact to its support. Make sure that this screw is not so tight that it prevents the ball from rolling freely within the barrel. Finally, adjust the tension on the low gradient stationary contact brush such that, when the low gradient contacts are made and fully wiped in, there is approximately an equal deflection on each brush.

CAUTION: When the above adjustments are complete, be sure to replace the two red jumper leads.

Bias Torque Adjustment

The diretional unit is provided with a notched core which is used to minimize the torque produced in the rotor by current alone in the operating coils with the polarizing circuits de-energized. This adjustment is made at the factory and may be checked as follows:

First, short out the potential polarizing circuit. Adjust the control spring so that the moving contact structure is balanced between the stationary contact and the stop. This can be done by loosening the hexagonal-head locking screw, which clamps the spring adjusting ring in position, and turning the ring to the left until the balance point is reached.

Energize the operating circuit with 30 amperes and check that the contact arm does not move. The core should be turned in small steps until a point is reached where there is no "bias" torque from current alone The core can be turned by loosening the large hexagonal nut on the bottom of the unit and turning the core by means of the slotted bearing screw. This screw should be held securely in position when the nut is retightened.

Keep in mind that currents of these magnitudes will cause the coils to overheat if left on too long. Therefore, leave the test current on only for short intervals and allow sufficient time between tests for the coils to cool.

After the torque adjustment has been made, the spiral spring should be set to have barely enough tension to swing the moving contact arm against the stop screw when the unit is de-energized. Sufficient tension will be obtained if the adjusting ring is rotated about one-half inch from the neutral position in the counterclockwise direction, as measured on the periphery of the ring.

Clutch Adjustment

The connections shown in Fig. 22 for the polarity check can also be used in making the clutch adjustment. The 50 ohm fixed resistor should be replaced with an adjustable resistor capable of providing current up to 10 amperes. A screw, projecting from the side of the moving contact arm, controls the clutch pressure, and consequently, the current value which will cause the clutch to slip. With rated frequency and at rated volts, the clutch should be set to slip in the range of 5.5 to 8 amperes.

The clutch slip is limited to approximately 20 degrees by means of a stop pin in the shaft. It should first be set to slip in the contact closing direction at the current values listed in the table with the polarizing circuit energized, but with the restraint circuit open. Then check that the clutch will slip to the limit in the contact opening direction with the restraint circuit energized at rated volts and the current circuit open.

INSTANTANEOUS OVERCURRENT UNIT (DIRECTIONALLY CONTROLLED)

Bearings

The section BEARINGS, under DIRECTIONAL UNIT, also applies to the bearings of the instantaneous overcurrent unit.

Cup and Stator

The section CUP AND STATOR under DIRECTIONAL UNIT, also applies to the cup and stator of the instantaneous overcurrent unit.

Contact Adjustments

The contact gap may be adjusted by loosening slightly the screw at the front of the contact support. The screw should be only loose enough to allow the contact barrel to rotate in its sleeve.

The backstop screw fastened with a locknut should hold the moving contact arm in a neutral position, i.e., with the arm pointing directly forward. Then, by rotating the barrel, advance the stationary contact until it just touches the moving contact. Next, back it away 2/3 turn to obtain approximately 0.020 inch gap. Last, tighten the screw which secures the barrel.

The moving contact may be removed by loosening the screw which secures it to the contact arm and sliding it from under the screw head.

Clutch Adjustment

The clutch on the instantaneous overcurrent unit can be adjusted by means of the screw located on the right-hand side of the moving contact arm. If the locknut is loosened and the screw turned in, the current at which the clutch will slip will be increased. Place the tap plugs in the lower range taps (series). Hold the directional unit contacts closed. Adjust the clutch so that the current at which the cup just starts to slip falls within the limits listed in Table 14.

TABLE 14

DIRECTIONALLY CONTROLLED IOC UNIT CLUTCH ADJUSTMENT

Pickup Range	Suddenly Applied Current Clutch Must Not Slip (Amps)	Suddenly Applied Current Clutch Must Slip (Amps)
2-8	12	15
10-40	44	58
Note that too frequent or too long application of these currents will overheat the coils		

INSTANTANEOUS UNIT (NON-DIRECTIONALLY CONTROLLED)

1. Both contacts should close at the same time.

2. The backing strip should be so formed that the forked end (front) bears against the molded strip under the armature.

3. With the armature against the pole piece, the cross member of the "T" spring should be in a horizontal plane and there should be at least 1/64 inch wipe on the contacts. Check this by inserting a 0.010 inch feeler gage between the front half of the shaded pole with the armature held closed. The contacts should close with the feeler gage in place.

CONTACT CLEANING

For cleaning fine silver contacts, a flexible burnishing tool should be used. This consists of a flexible strip of metal with an etched roughened surface, resembling in effect a superfine file. The polishing action is so delicate that no scratches are left, yet corroded material will be removed rapidly and thoroughly. The flexibility of the tool insures the cleaning of the actual points of contact.

Fine silver contacts should not be cleaned with knives, files or abrasive paper or cloth. Knives or files may leave scratches which increase arcing and deterioration of the contacts. Abrasive paper or cloth may leave minute particles of insulating abrasive material in the contacts thus preventing contact closing.

The burnishing tool described above can be obtained from the factory.

RENEWAL PARTS

It is recommended that sufficient quantities of renewal parts be carried in stock to enable the prompt replacement of any that are worn, broken, or damaged.

When ordering renewal parts, address the nearest Sales Office of the General Electric Company, specify quantity required, name of part wanted, and give complete nameplate data. If possible, give the General Electric Company requisition number on which the relay was furnished. Refer to Renewal Parts Publication GEF-4090.

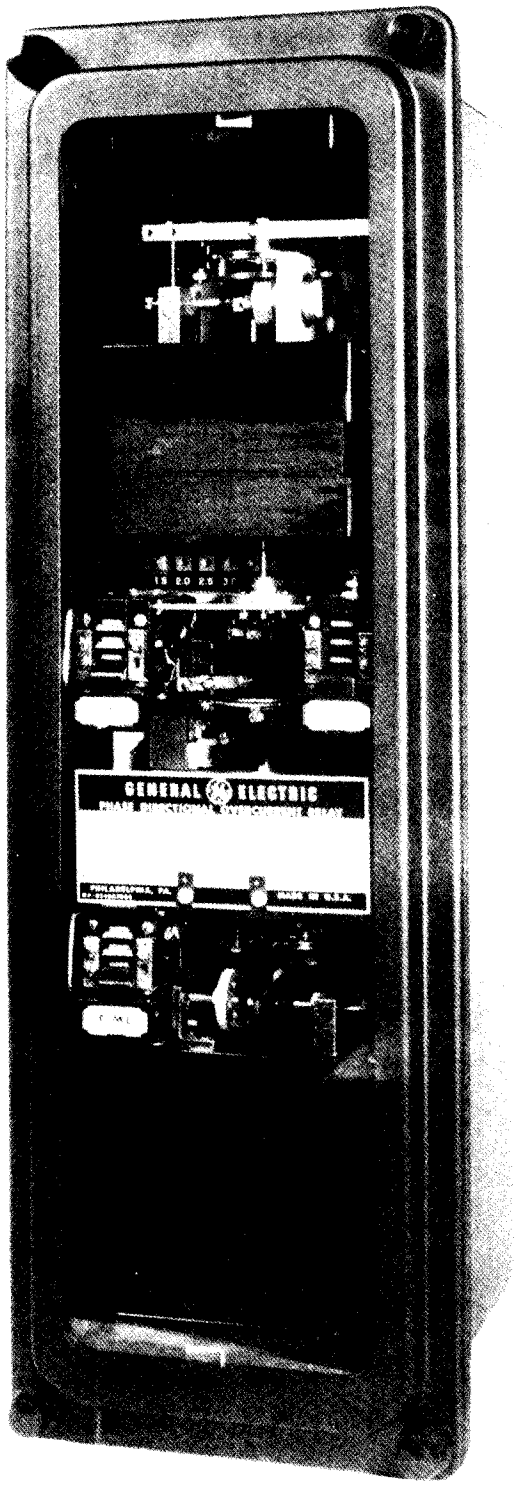

Fig. 1 (8043470) Type JBCV53M(-)Y1A Relay in Case (Front View)

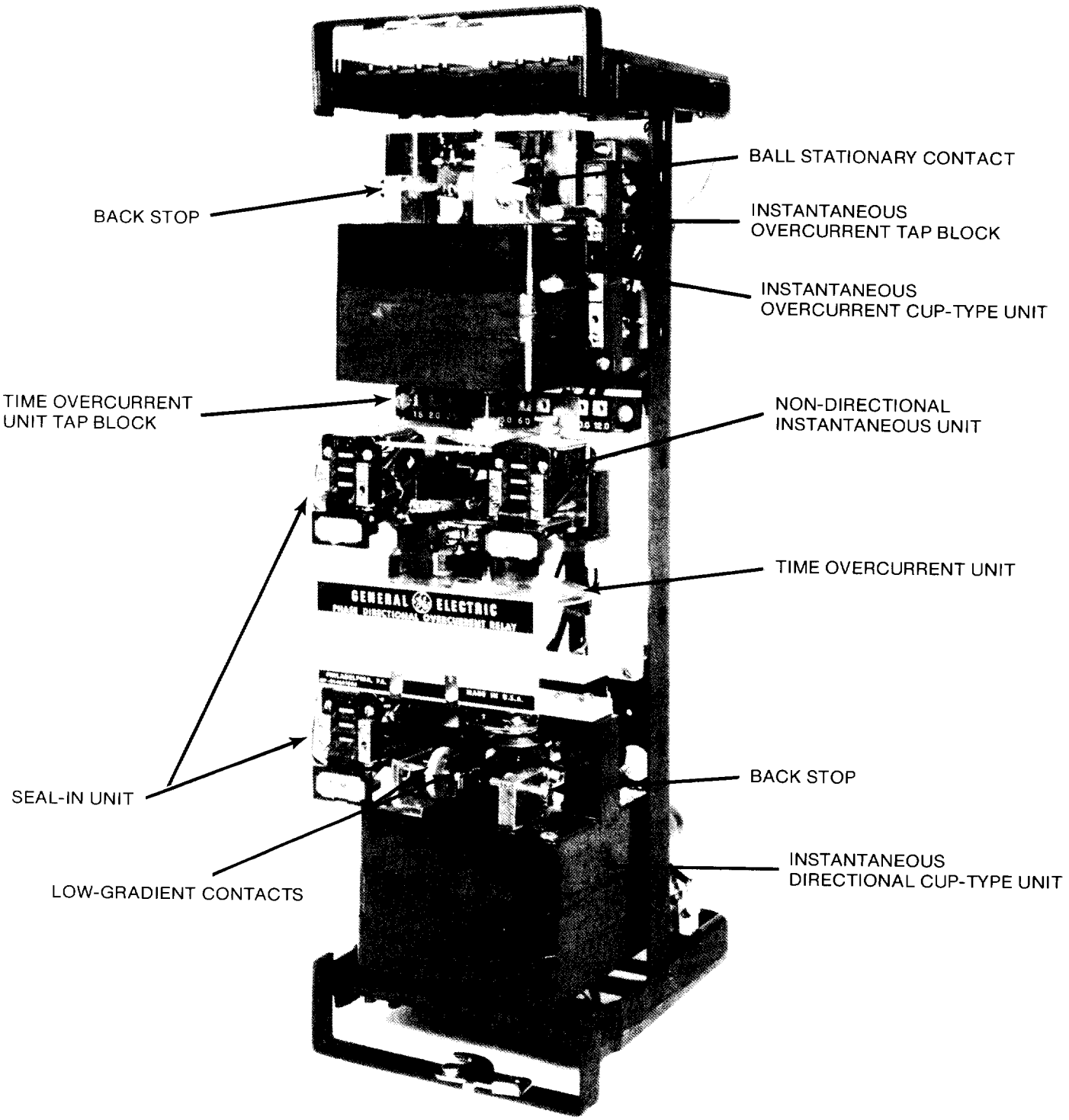

Fig. 2 (8043471) Type JBCV53M(-)Y1A Relay Out of Case (Front View)

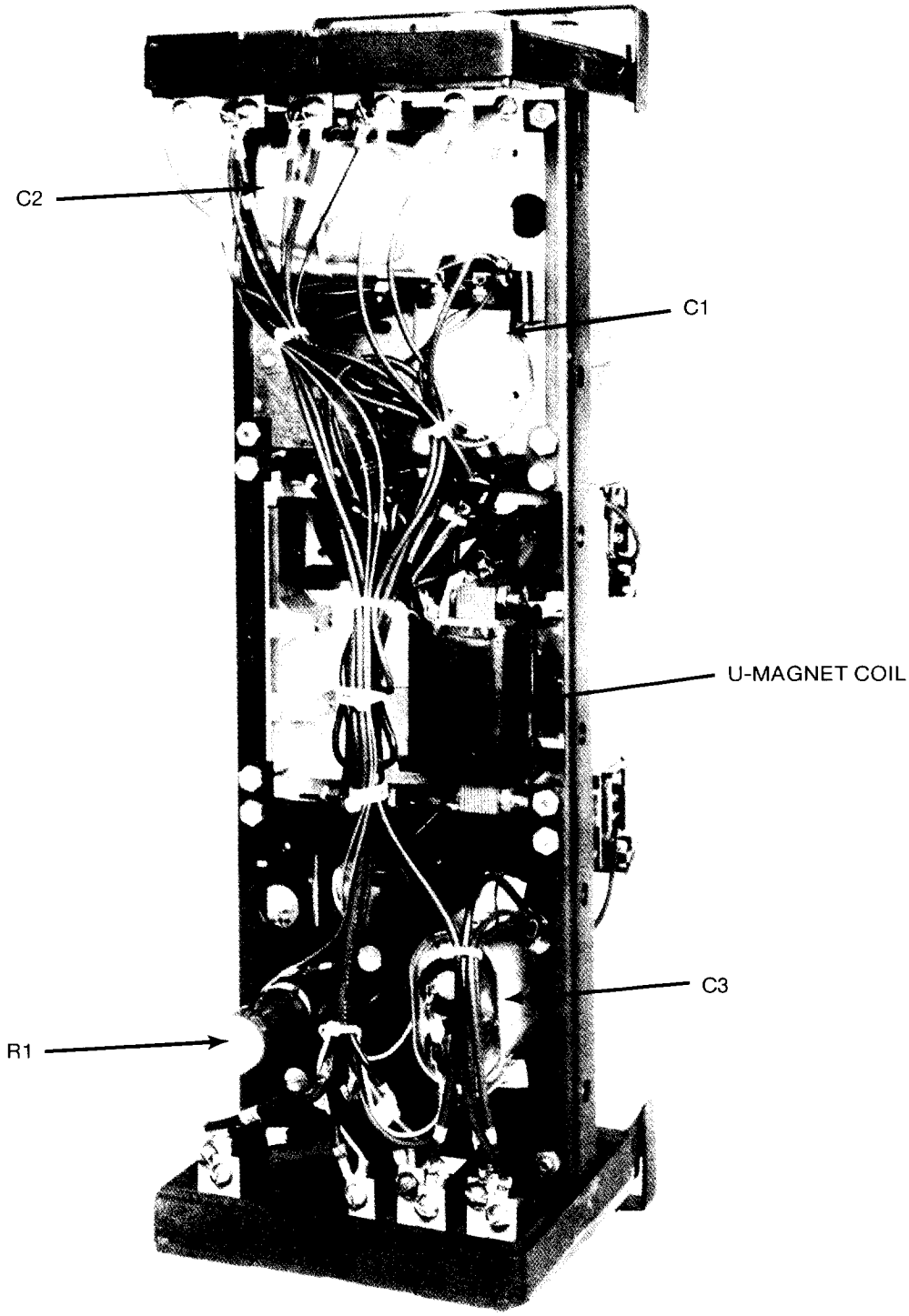

Fig. 3 (8043472) Type JBCV53M(-)Y1A Relay Out of Case (Rear View)

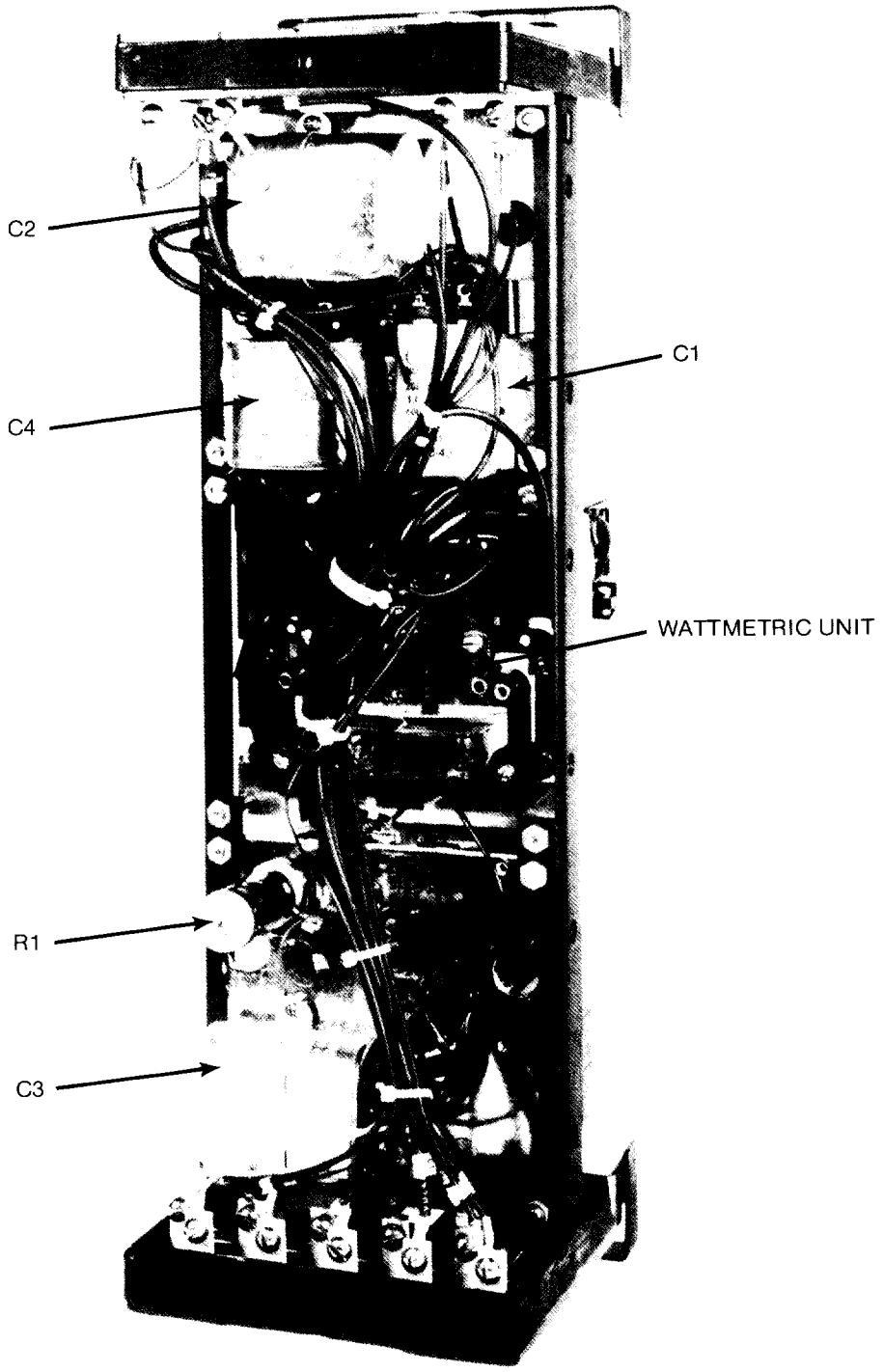

Fig. 4 (8043473) Type JBCV77M Relay Out of Case (Rear View)

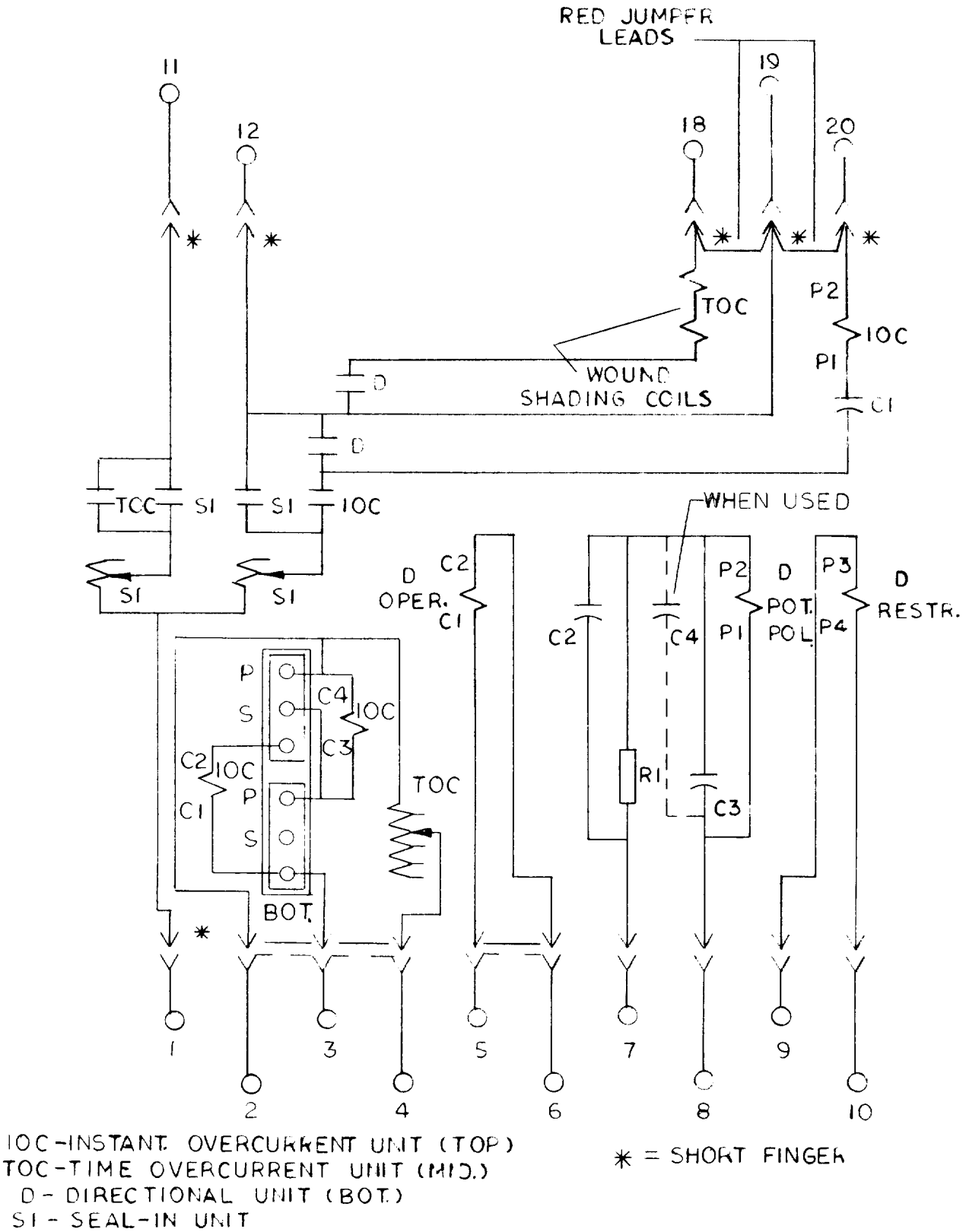

Fig. 5 (0257A6198-0) Internal Connections for JBCV51M and JBCV53M Relays (Front View)

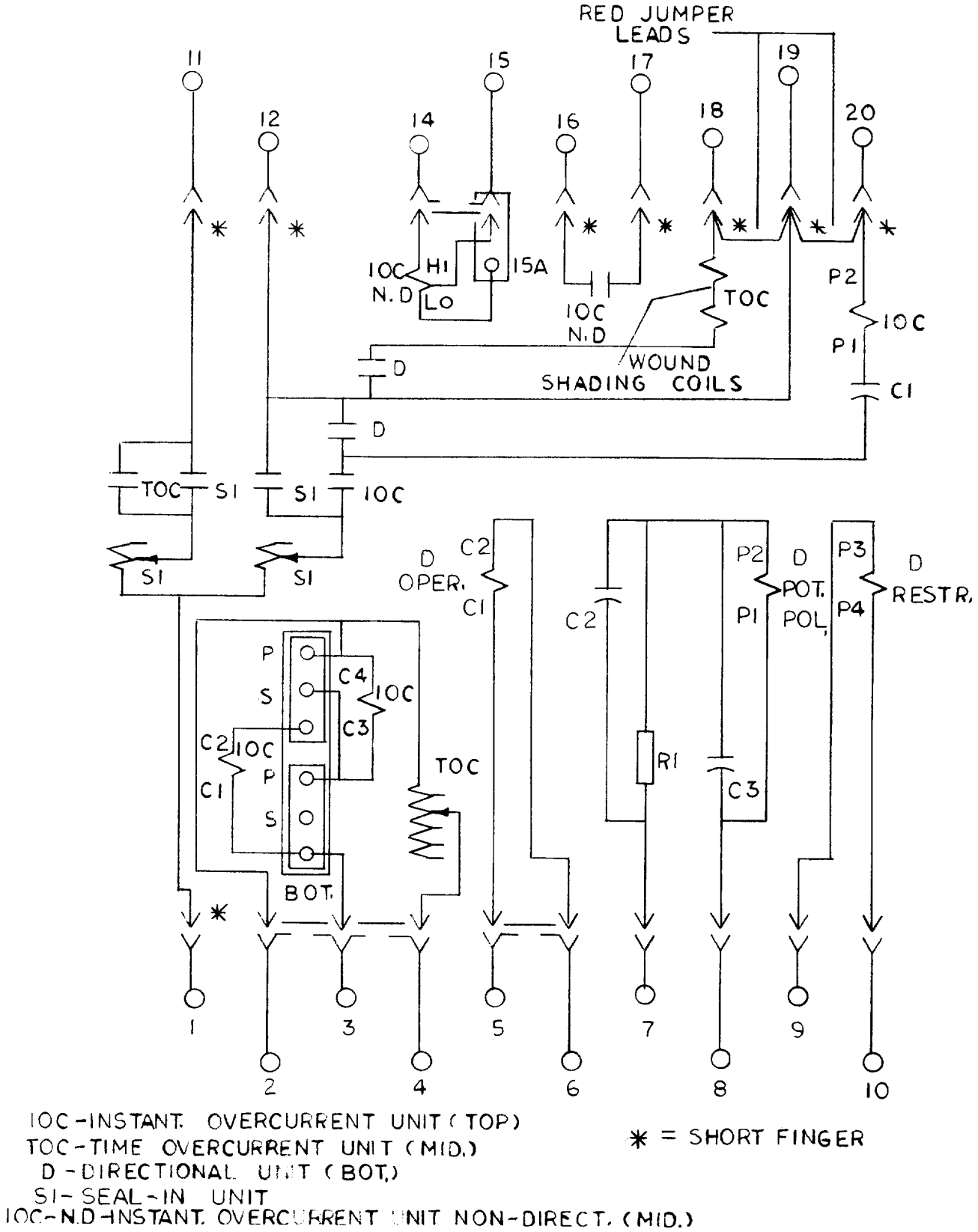

Fig. 6 (0257A9685-1) Internal Connections for JBCV53M(-)Y1A Relay (Front View)

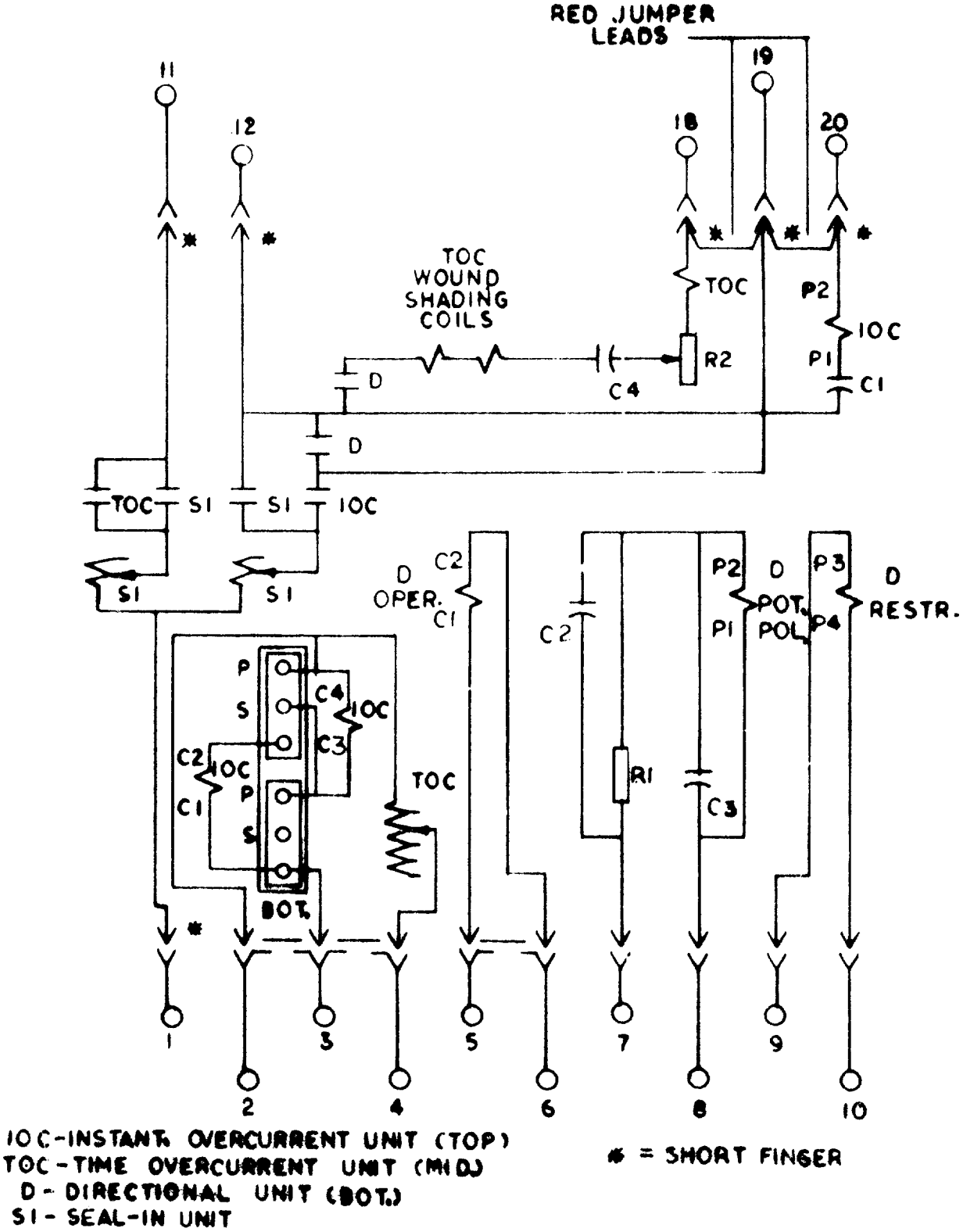

* Fig. 7 (0257A9686 [1]) Internal Connections for JBCV77M Relay (Front View)

* Revised since last issue

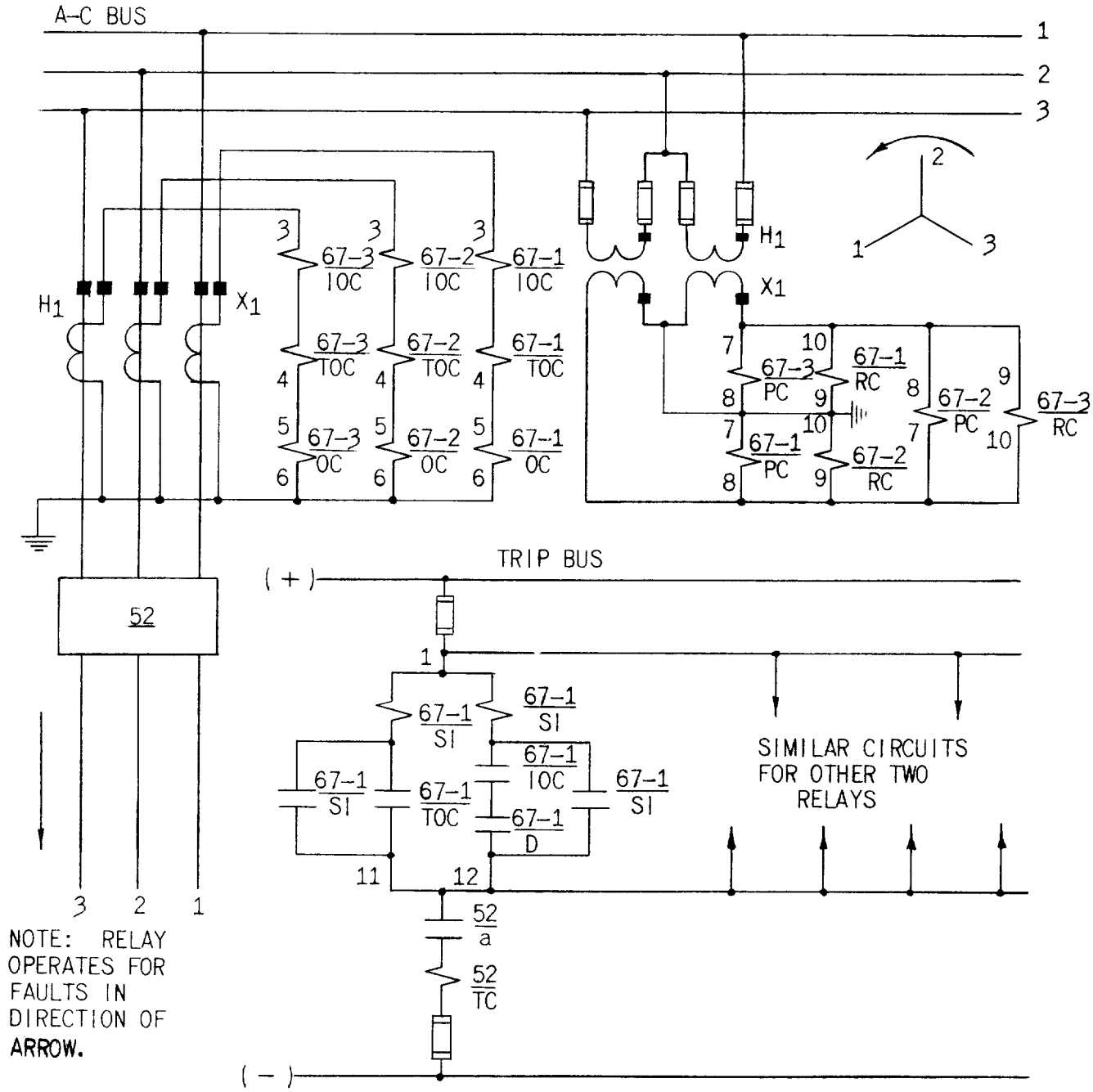

67 – PHASE DIRECTIONAL OVERCURRENT RELAY	
TOC – TIME OVERCURRENT UNIT IOC – INSTANTANEOUS OVERCURRENT UNIT D – DIRECTIONAL UNIT	OC – DIRECTIONAL UNIT OPERATING COIL PC – DIRECTIONAL UNIT POLARIZING COIL RC – DIRECTIONAL UNIT RESTRAINT COIL SI – SEAL-IN WITH TARGET
52 – POWER CIRCUIT BREAKER	
TC – TRIP COIL	a – AUXILIARY SWITCH, CLOSED WHEN BREAKER IS CLOSED

Fig. 8 (0418A0934-0) Typical External Connections Diagram for Relay Types JBCV51M, JBCV53M and JBCV77M

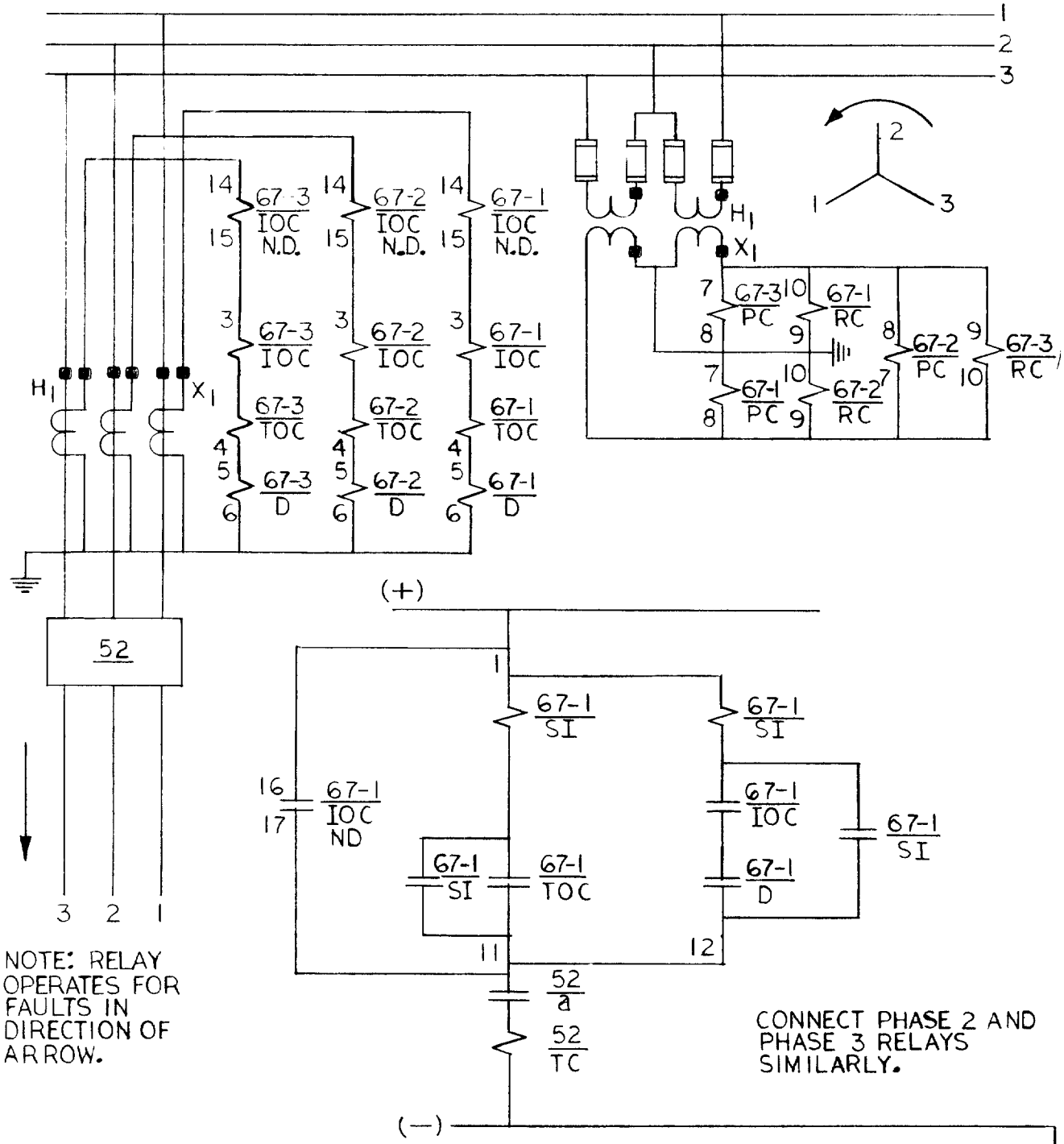

67-PHASE DIRECTIONAL OVERCURRENT RELAY	
TOC-TIME OVERCURRENT UNIT D-DIRECTIONAL UNIT SI-SEAL IN WITH TARGET	OC - DIRECTIONAL UNIT OPERATING COIL PR - DIRECTIONAL UNIT POLARIZING COIL RC - DIRECTIONAL UNIT RESTRAINT COIL

Fig. 9 (273A9059-0) Typical External Connections Diagram for Relay Type JBCV53M(-)Y1A

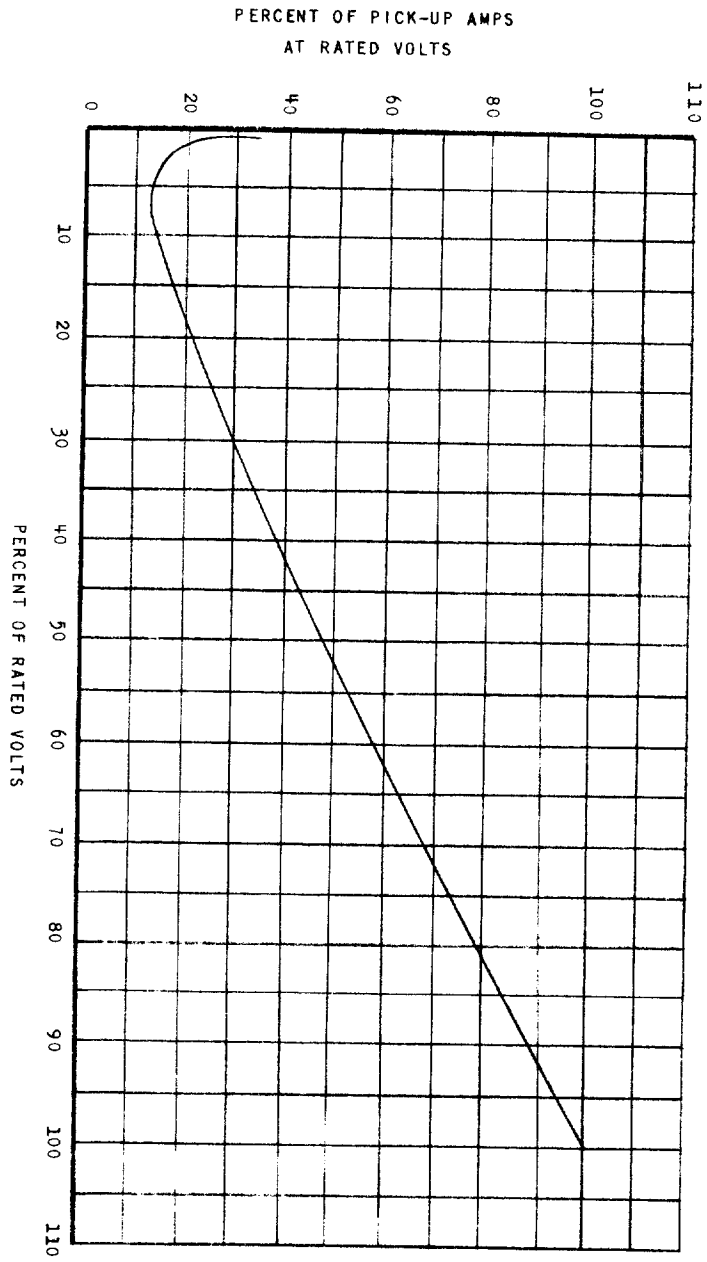

Fig. 10 (K-6507958-1) Directional Unit Pickup Characteristic with Balanced Voltages and at Maximum Torque Angle

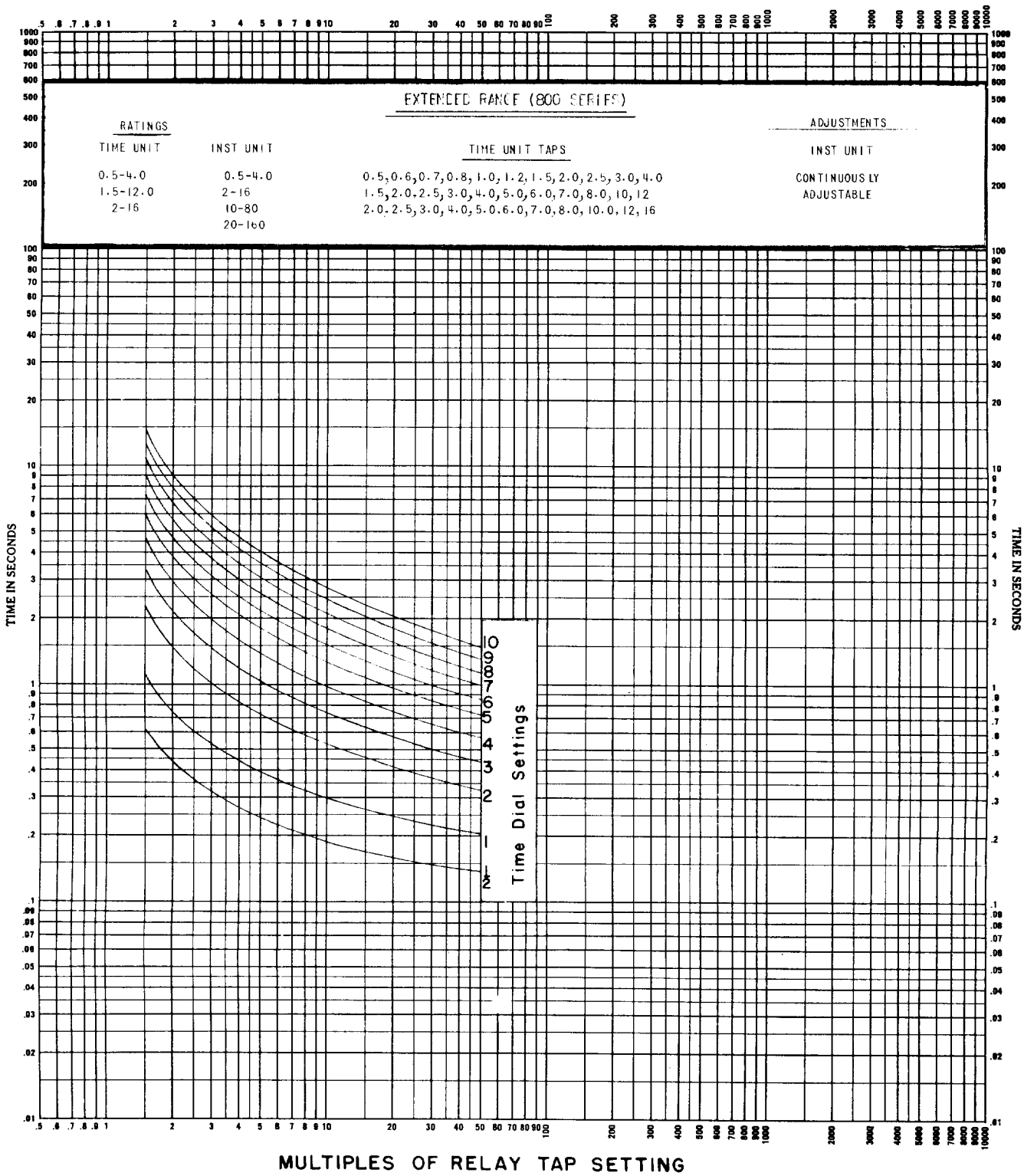

Fig. 11 (0888B0269-3) Time-current Characteristic of Inverse Time Overcurrent Unit

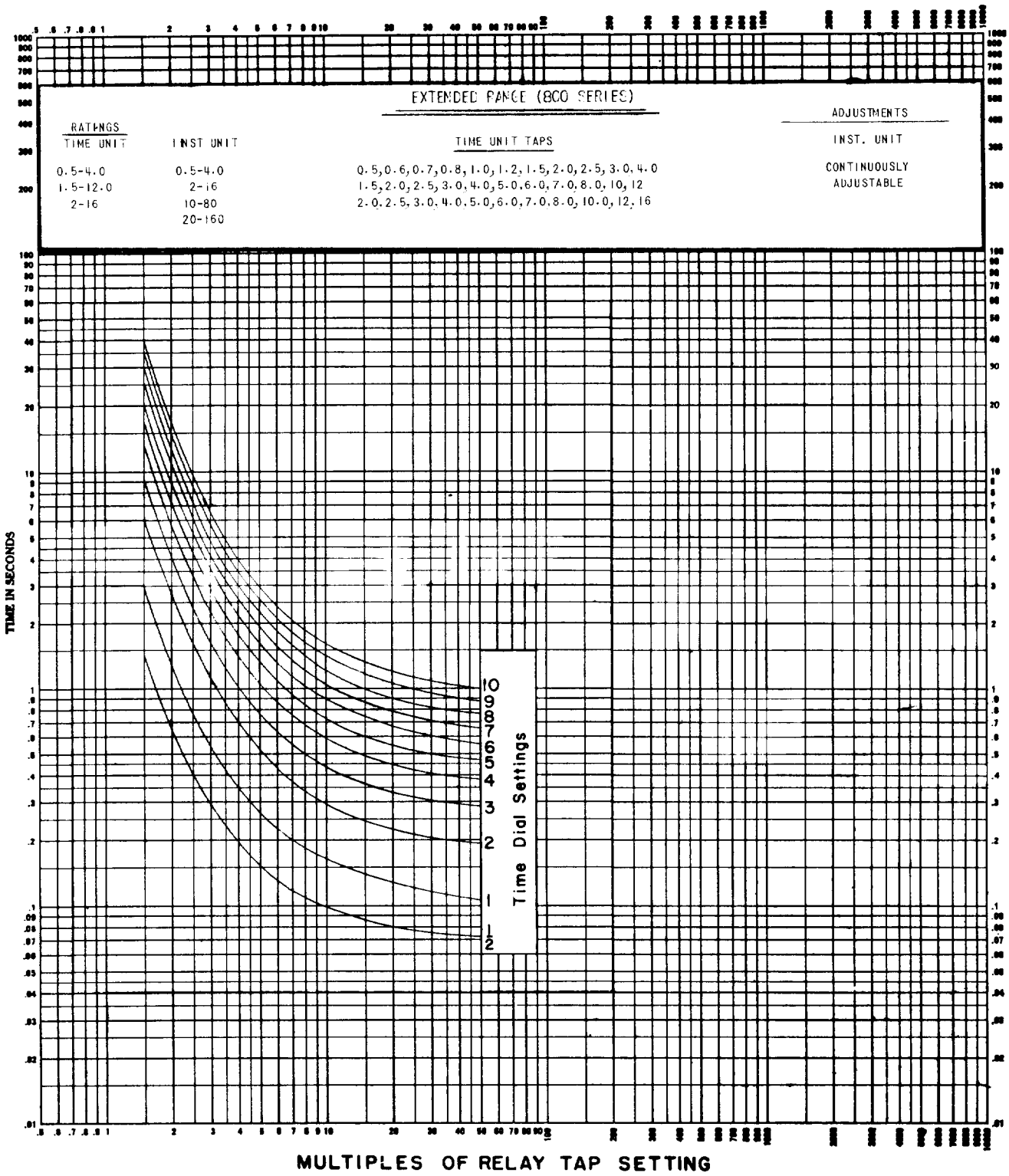

Fig. 12 (0888B0270-3) Time-current Characteristic of Very Inverse Time Overcurrent Unit

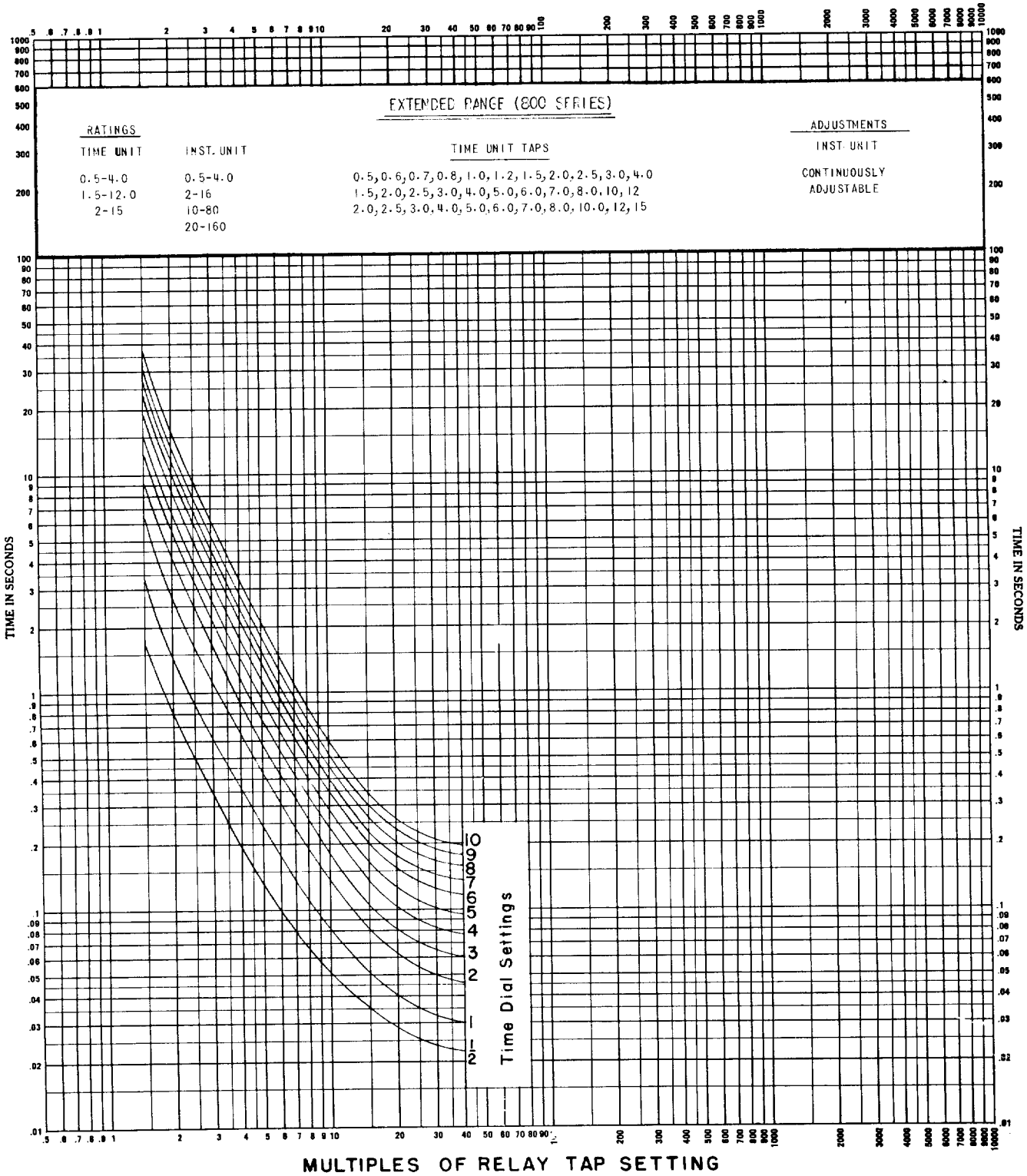

Fig. 13 (0888B0274-5) Time-current Characteristic of Extremely Inverse Time Overcurrent Unit

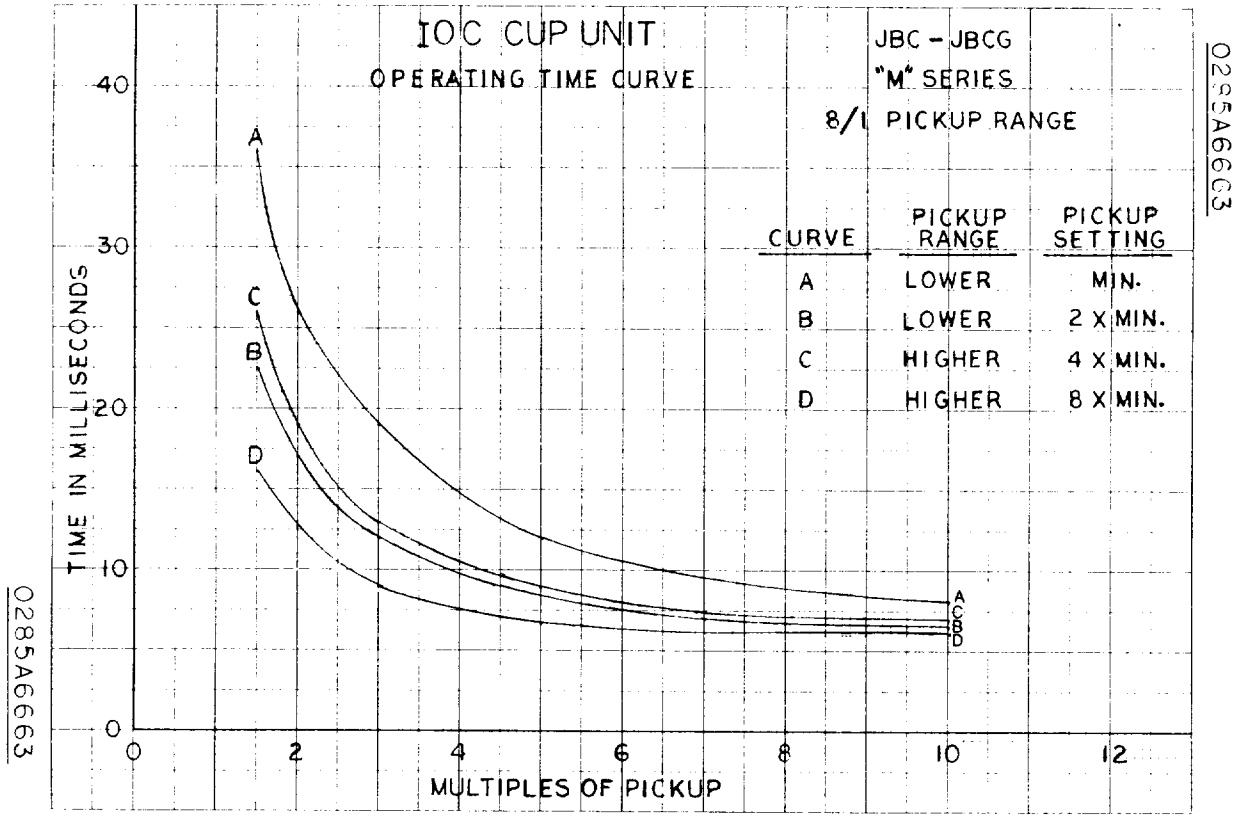

* Fig. 14 (0285A6663) Representative Time-current Characteristic of Directionally Controlled Instantaneous Overcurrent Unit

* Revised since last issue

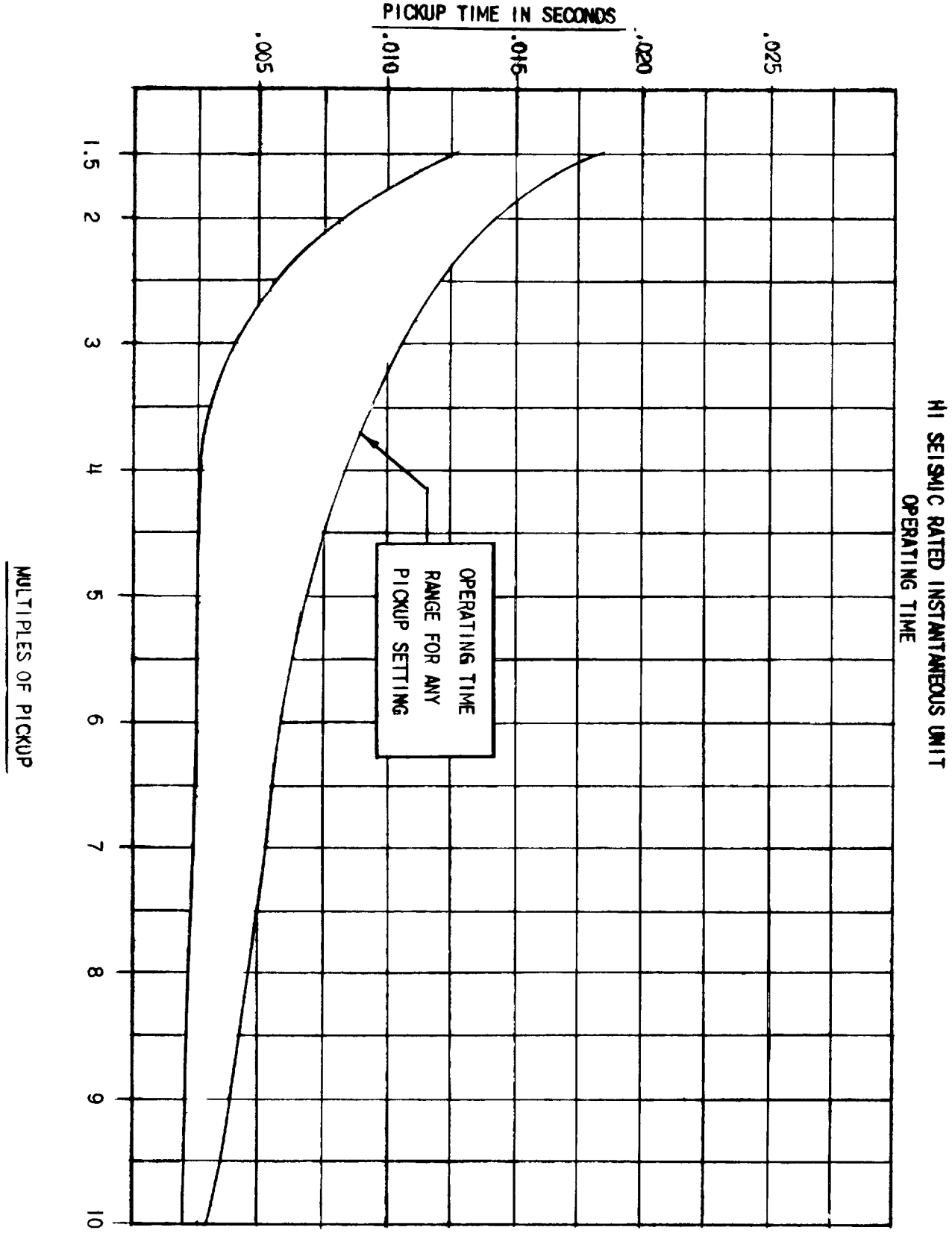

* Fig. 15 (0286A8695 [1]) Time-current Characteristic of the Hi-Seismic Instantaneous Unit

* Revised since last issue

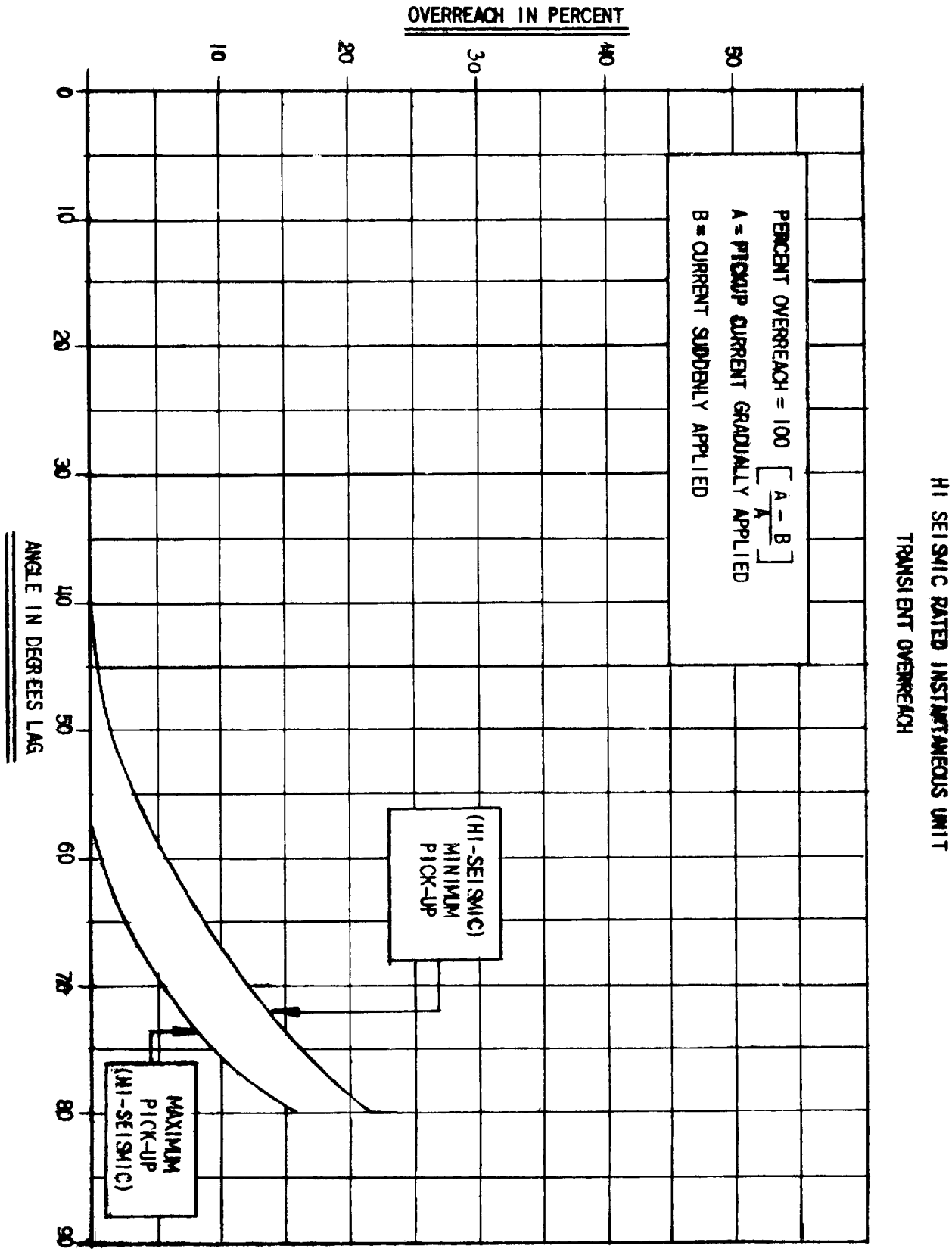

Fig. 16 (208A8694-2) Transient Overreach Characteristics of the Hi-Seismic Instantaneous Unit

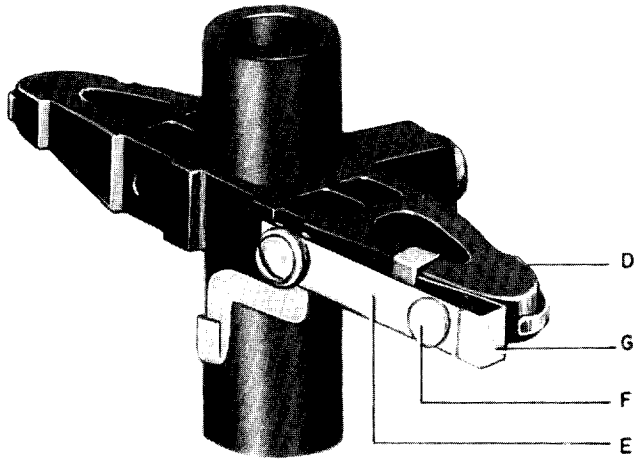

D - Moving Contact Arm
E - Moving Contact Brush
F - Button Contact Tip
G - Moving Contact Brush Retainer

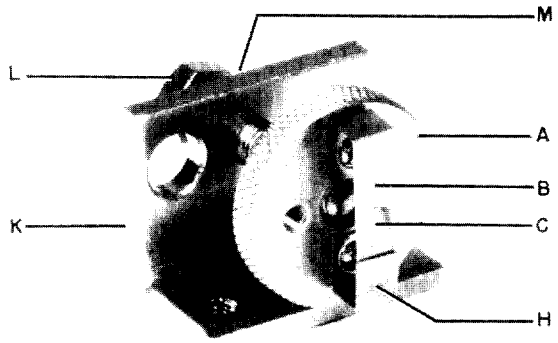

A - Contact Dial
B - Stationary Contact Brush
C - Conical Contact Tip
H - Brush Retainer
K - Stationary Contact Support
L - Mounting Screw
M - Locknuts

Fig. 17 (8023399 and 8027689) Low Gradient Contact Assembly for the Directional Unit

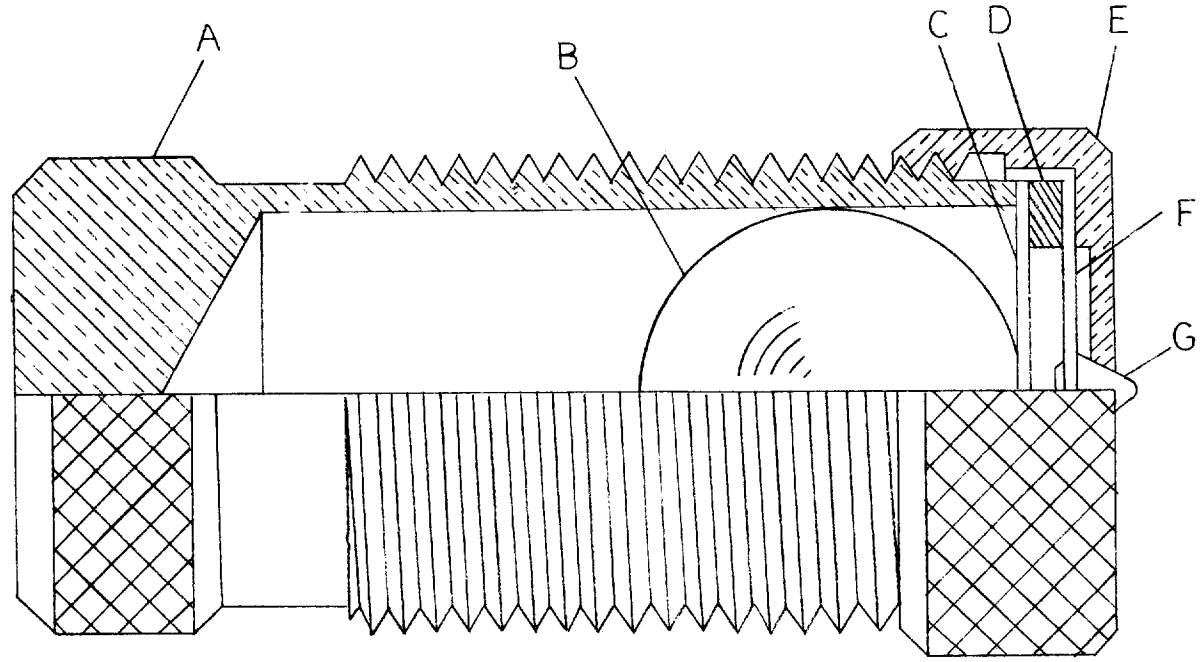

A - INCLINED TUBE
B - STAINLESS STEEL BALL
C - DIAPHRAM
D - SPACER
E - CAP
F - FLAT SPIRAL SPRING
G - CONTACT

Fig. 18 (K-6077069-4) Barrel Contact Assembly for the Directional and the Instantaneous Overcurrent Units

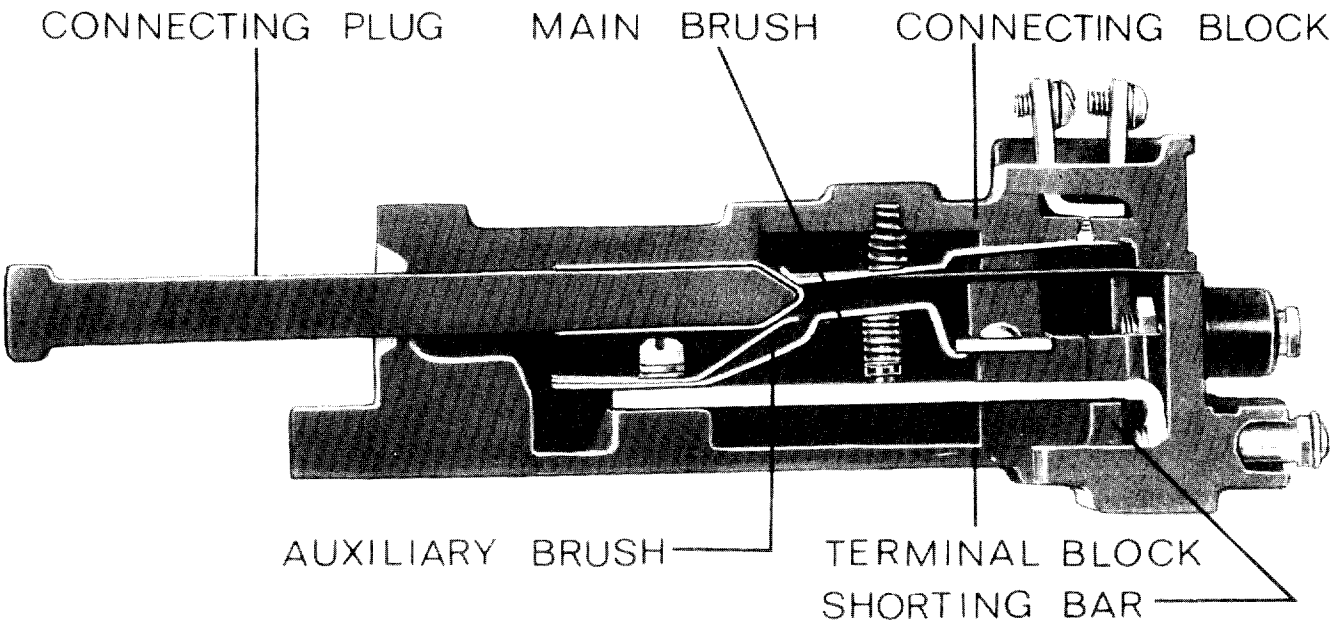

NOTE: AFTER ENGAGING AUXILIARY BRUSH CONNECTING PLUG TRAVELS 1/4 INCH BEFORE ENGAGING THE MAIN BRUSH ON THE TERMINAL BLOCK

Fig. 19 (8025039) Cross Section of Drawout Case Showing Position of Auxiliary Brush

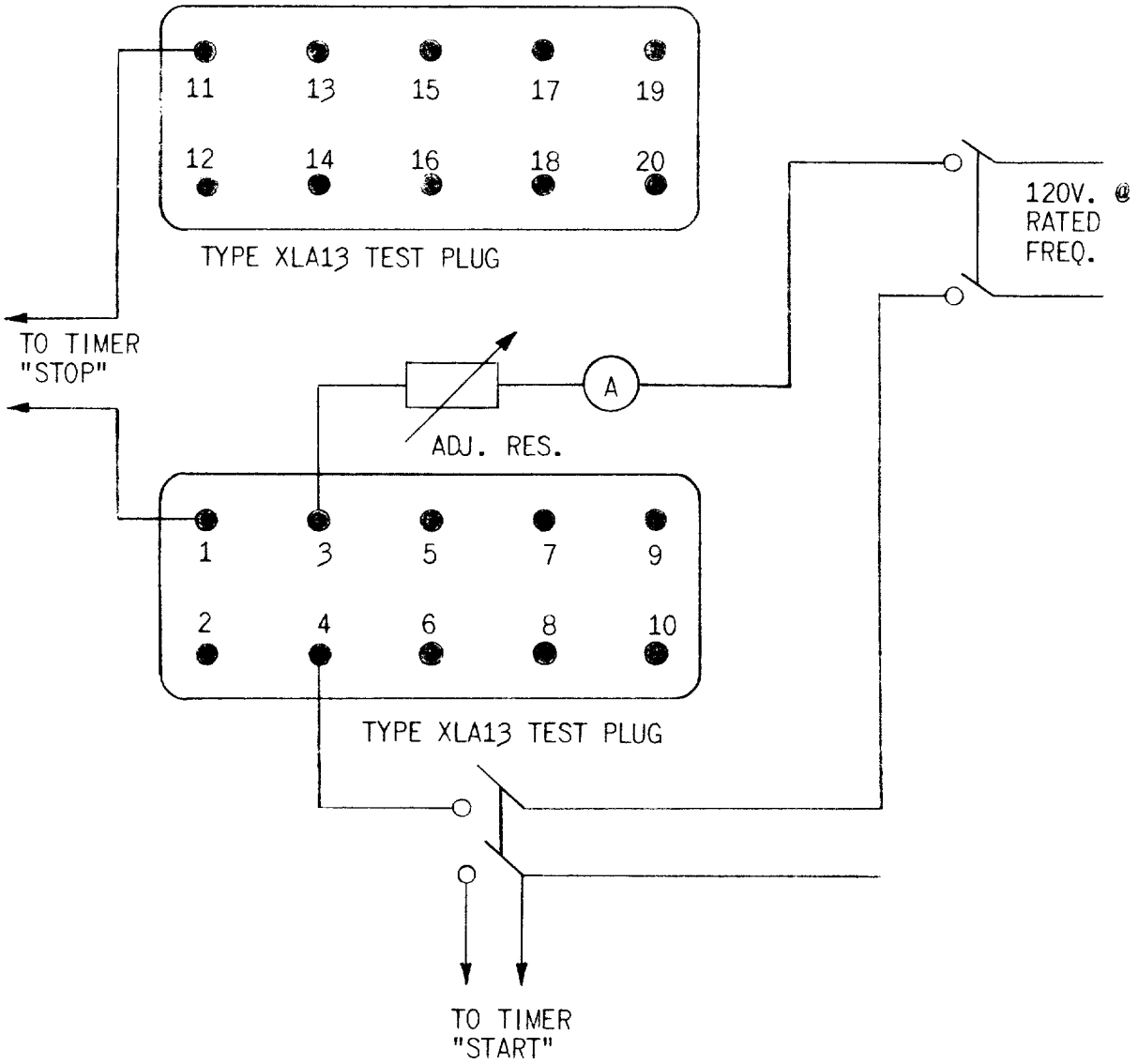

Fig. 20 (0178A9036-0) Test Connections for Checking the TOC Unit

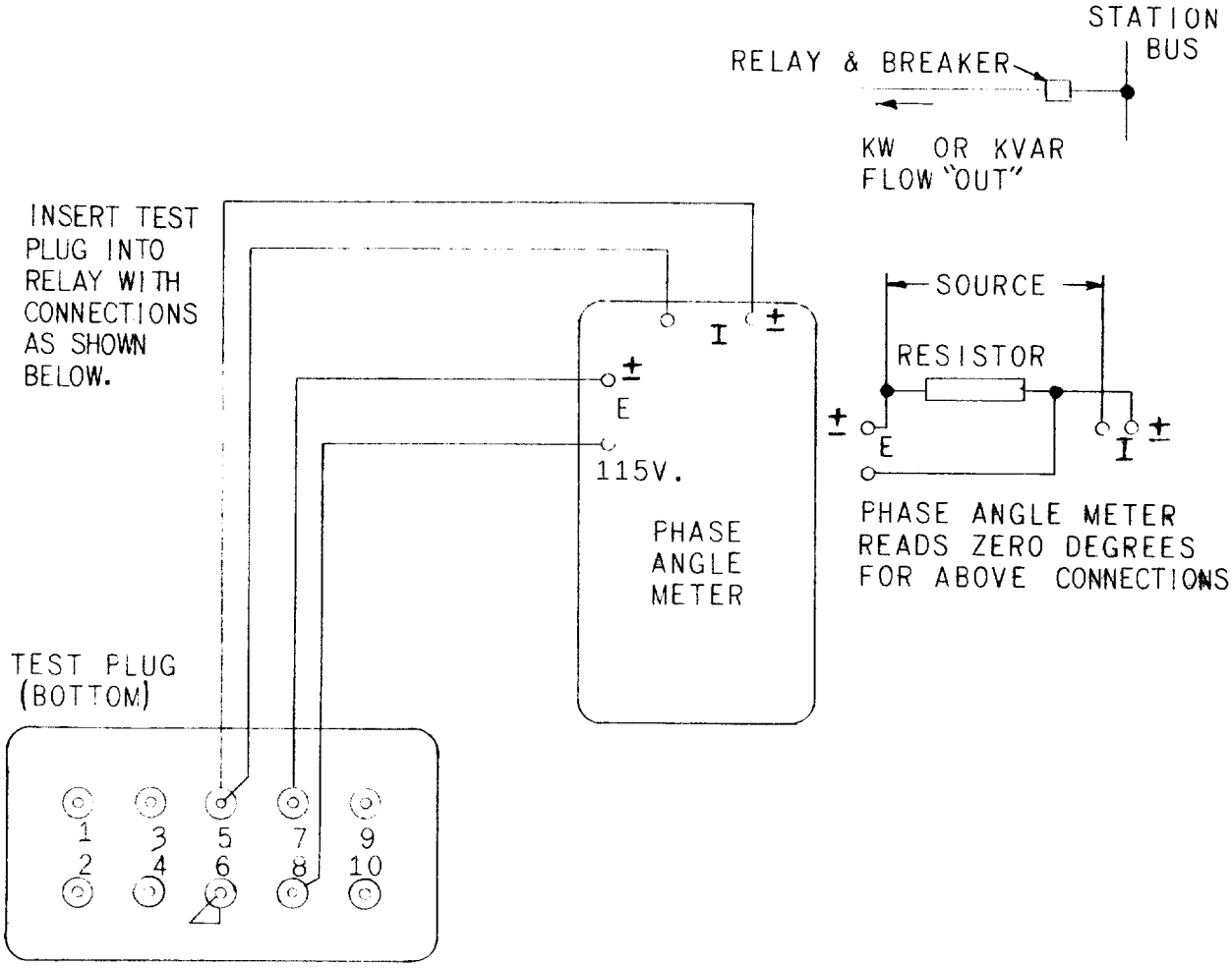

POWER FACTOR ANGLE (DEG. LEAD)	0–45	45–90	90–135	135–180	180–225	225–270	270–315	315–360
KW & KVAR DIRECTIONS WITH RESPECT TO THE BUS	KW OUT > KVAR IN	KVAR IN > KW OUT	KVAR IN > KW IN	KW IN > KVAR IN	KW IN > KVAR OUT	KVAR OUT > KW IN	KVAR OUT > KW OUT	KW OUT > KVAR OUT
METER READING WITH PROPER EXT. CONNS.	90–135	135–180	180–225	225–270	270–315	315–360	0–45	45–90

THE ABOVE RANGES OF PHASE ANGLE METER READINGS ARE THE ANGLES BY WHICH THE CURRENT LEADS THE VOLTAGE WITH THE DESCRIBED CONDITIONS OF POWER (KW) AND REACTIVE POWER (KVAR) FLOW WITH THE STATION BUS CONSIDERED AS THE REFERENCE IN ALL CASES. > MEANS GREATER THAN.
CAUTION: MAKE CORRECTIONS FOR METER ERRORS ON LOW CURRENTS, INHERENT IN SOME PHASE-ANGLE METERS.

Fig. 21 (0377A0195-3) Test Connections for Checking Polarity of the External Wiring to the Directional Unit Operating and Polarity Circuits

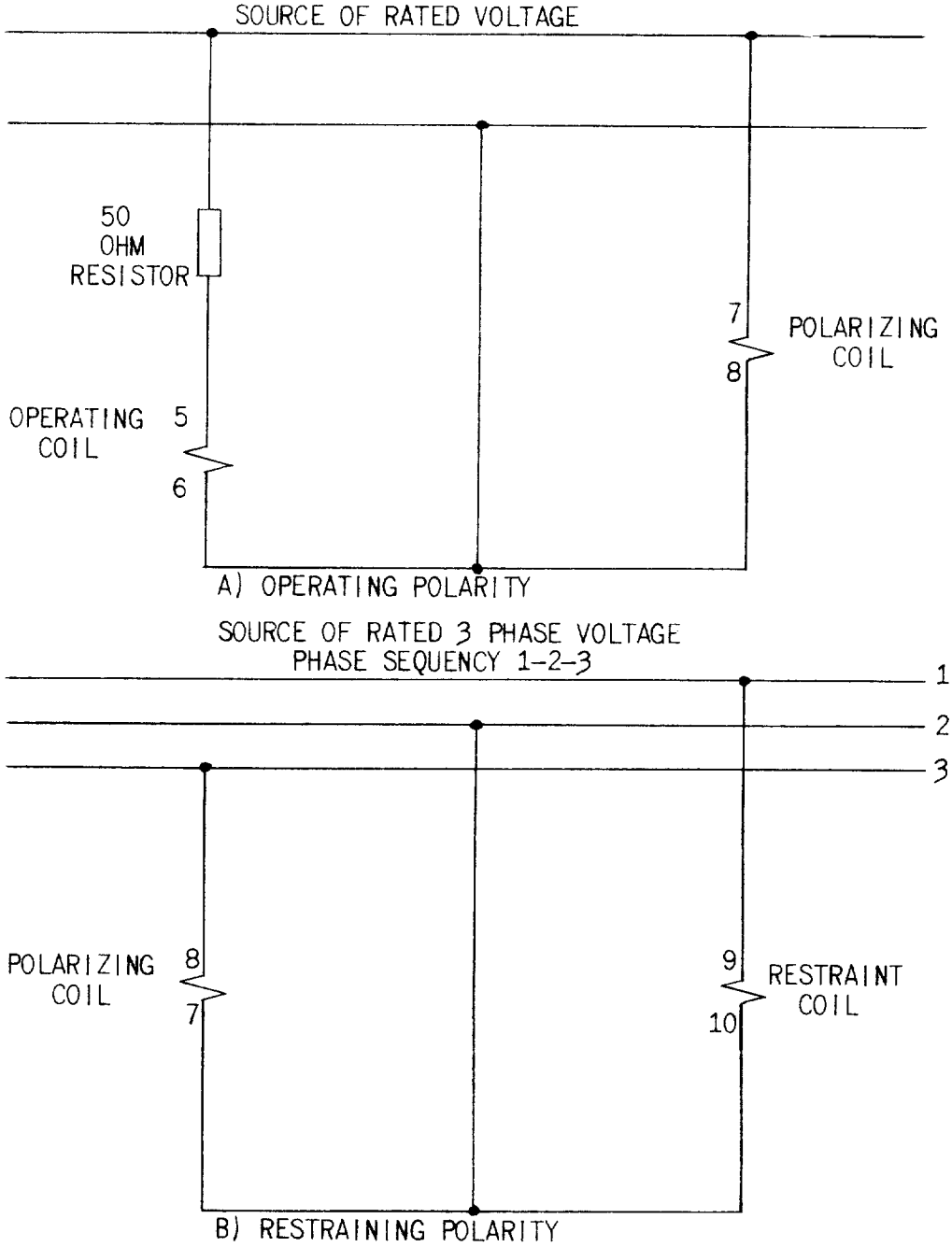

NOTE: THE DIRECTIONAL UNIT CONTACTS SHOULD CLOSE WHEN THE RELAY IS ENERGIZED WITH EITHER OF THE ABOVE CONNECTIONS.

Fig. 22 (0418A0971-0) Test Connections for Checking Polarity of the Directional Unit Internal Wiring

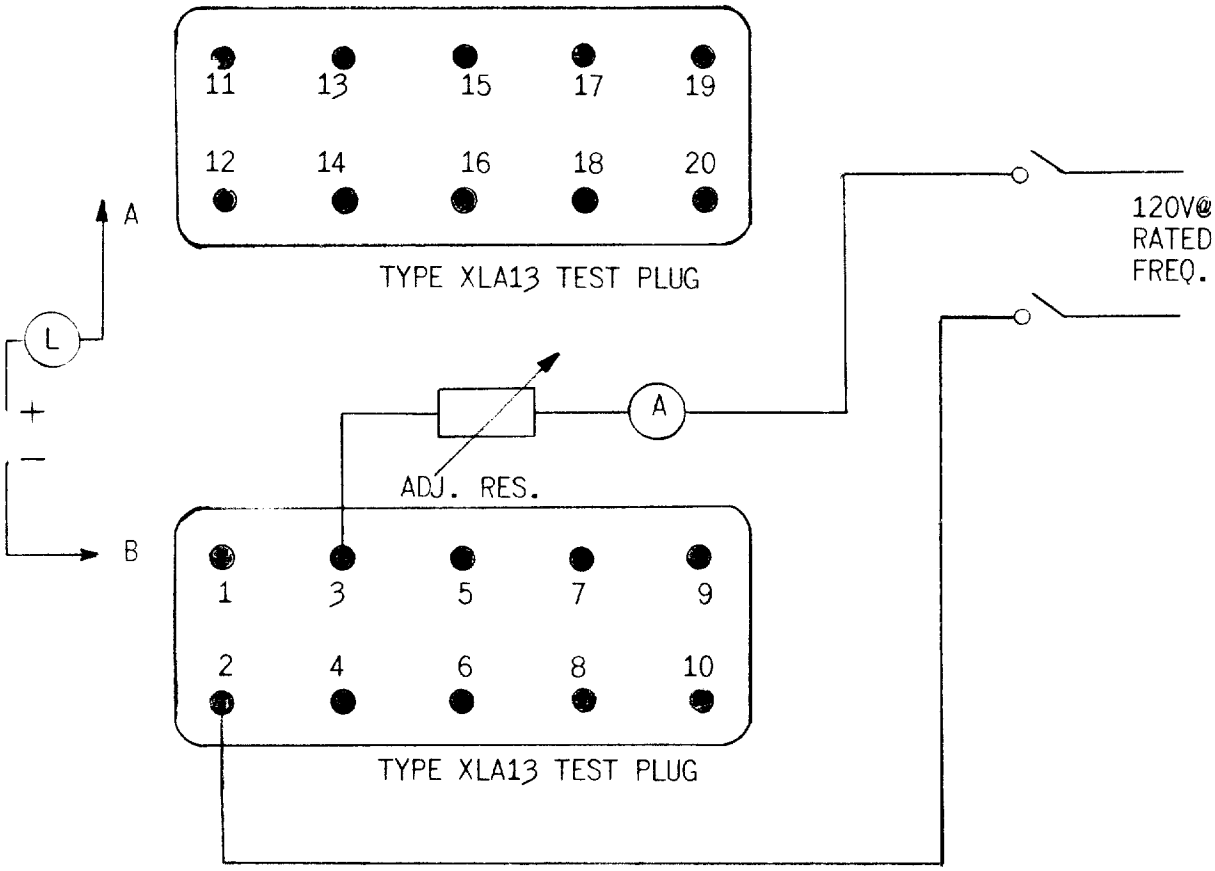

RELAY TYPE	CONNECT	
	A	B
JBCG 51	12	19
53	12	19
77	12	19
52	13	19*
54	13	19*
78	13	19*

*BLOCK DIRECT. UNIT
CONTACTS CLOSED

Fig. 23 (0178A9035-0) Test Connections for Checking Pickup of Directionally Controlled IOC Unit

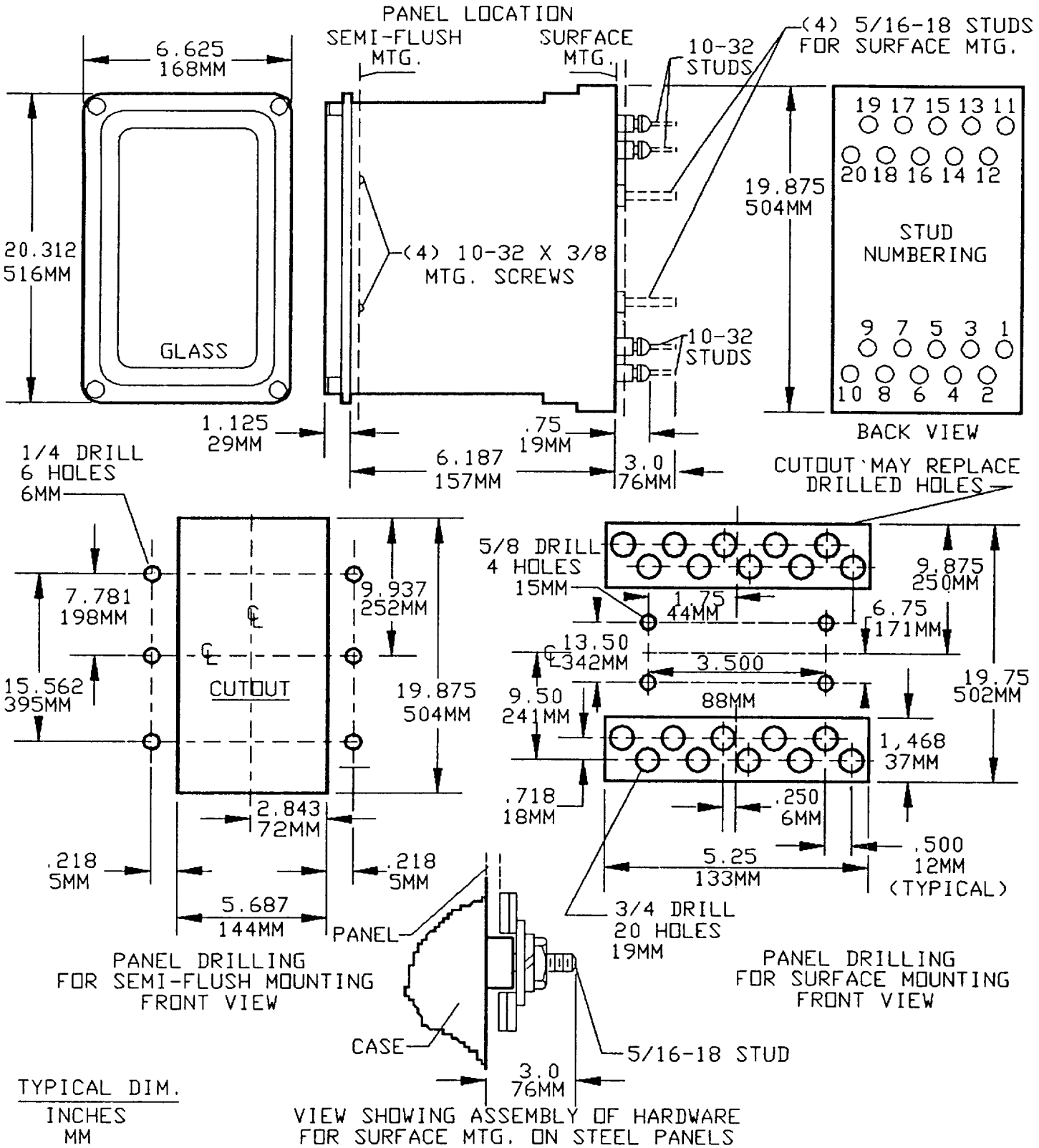

* Fig. 24 (K-6209276 [4]) Outline and Panel Drilling Dimensions for JBCV Relays

* Revised since last issue

(2/91) (200) GENERAL ELECTRIC METER AND CONTROL BUSINESS DEPT., MALVERN, PA 19355