INSTRUCTIONS

GEK- 26451A
SUPERSEDES GEK-26451

GROUND DISTANCE RELAY

TYPE CEYG52A

POWER SYSTEMS MANAGEMENT DEPARTMENT

GENERAL ELECTRIC

PHILADELPHIA, PA.

CONTENTS

	PAGE
INTRODUCTION	5
APPLICATION	5
CONTACTS	6
TARGET AND SEAL-IN	7
OPERATING PRINCIPLES	7
DIRECTIONAL ACTION	8
UNDERREACH	8
MEMORY ACTION	8
TRANSIENT OVERREACH	8
OPERATING TIME	9
TAPPED AUTOTRANSFORMER	9
CALCULATION OF SETTINGS	9
LIMITATION ON MHO UNIT REACH	11
BURDENS	12
CURRENT CIRCUITS	12
POTENTIAL CIRCUITS	12
CONSTRUCTION	12
ACCEPTANCE TESTS	13
VISUAL INSPECTION	13
MECHANICAL INSPECTION	13
RECEIVING, HANDLING AND STORAGE	13
PERIODIC CHECKS AND ROUTINE MAINTENANCE	13
CONTACT CLEANING	13
SERVICING	14
MECHANICAL ADJUSTMENTS	14
DIRECTIONAL TESTS	14
REACH SETTING	14
ANGLE OF MAXIMUM TORQUE	15
CLUTCH TESTS	15
TARGET SEAL-IN	16
PORTABLE TEST EQUIPMENT	16
ELECTRICAL TESTS ON THE MHO UNITS	16
ELECTRICAL TESTS	18
DRAWOUT RELAYS GENERAL	18
POWER REQUIREMENTS GENERAL	18
RENEWAL PARTS	19
APPENDIX I	20
DEFINITION OF SYMBOLS	20
VOLTAGE	20
DISTRIBUTION RATIOS	20
CURRENT	20
IMPEDANCE, REACTANCE	21
MISCELLANEOUS	21
APPENDIX II	22
APPENDIX III	23
MAXIMUM PERMISSIBLE REACH SETTINGS	23
SINGLE-PHASE-TO-GROUND FAULTS	23
DOUBLE-PHASE-TO-GROUND FAULTS	23

PHOTOS NOT AVAILABLE

FIG. 1 Front View - Relay Out Of Case

PHOTOS NOT AVAILABLE

FIG. 2 Rear View - Relay Out Of Case

GROUND DISTANCE RELAY

TYPE CEYG52A

INTRODUCTION

The Type CEYG52A relay is a three-phase, high speed, single zone mho-type directional ground distance relay. It consists of three single-phase units in an L2-D case, with one common target and seal-in unit. Provision is made for the testing of each unit separately as indicated on the internal connections in Figure 11. The transient overreach is limited by design and zero sequence current compensation is provided so that the CEYG52 is suitable for use as a first-zone relay. Since the relay employs phase-to-neutral polarization, memory action is provided to insure operation of the unit during zero-voltage faults.

APPLICATION

The CEYG52A relay because of its limited transient overreach characteristic and memory action feature is intended primarily for use as a first zone tripping relay. As such it is applicable as the first zone ground distance relay in straight step distance schemes, or as a high-speed tripping unit in direct or permissive underreaching transferred tripping schemes. For either application one CEYG52A relay is required at each end of the protected line, plus the necessary overreaching ground distance relays for the zone 2 step distance function or for the permissive function in the permissive underreaching transferred tripping scheme.

Since the CEYG52A relay uses phase-to-neutral voltage for both polarizing and restraint, the magnitude of fault resistance which can be accommodated during a phase-to-ground fault will be as indicated by the plot of the steady-state characteristic on an R-X diagram. This fact must be recognized when considering any application since fault resistance on ground faults can be significant.

In considering the performance of a phase distance relay on a phase-to-phase fault, the resistance which must be accommodated on the R-X plot is arc resistance, which can be estimated with reasonable accuracy. During ground faults on the other hand the fault resistance includes not only an arc resistance but also the resistance introduced by the fault current path through the structure and tower footing to ground. The magnitude of this ground fault resistance will be influenced by many factors such as the type of structure, i.e. wood pole or steel tower; the presence of a shield wire; procedures followed to reduce tower footing resistance; and local soil conditions. The total fault resistance during phase-to-ground faults consequently tends to by much higher than the arc resistance magnitude for phase faults, and furthermore, because of the nature of the factors involved, cannot be determined with as much accuracy.

It is recommended that the application of the CEYG52A relay be limited to lines with shield wires, since their presence tends to reduce the effects of tower footing resistance during a ground fault, and preferably be limited to lines with steel towers where structure and individual tower footing resistance tend to be lower. In any case the effect of maximum predicted ground fault resistance on relay performance should be checked on an R-X plot of the steady-state relay characteristic. It is essential that a nearby internal fault be checked to insure that the maximum expected fault resistance does not result in a net impedance which falls outside the relay mho characteristic. A check should also be made of the pull-back in the first-zone reach caused by the expected fault resistance for faults near the nominal reach setting of the relay. From the preceding discussion it should be apparent that the CEYG52A relay is more generally applicable on longer lines where the fault resistance tends to be a smaller percentage of the relay ohmic reach setting.

With zero sequence current compensation the relay, in the absence of zero sequence mutual impedance with a parallel circuit and neglecting fault resistance will measure the positive sequence impedance from the relay location to the fault. However, because the zero sequence impedance of the protected line is not generally known to a high degree of accuracy, and because it is not usually possible to fully compensate for its effects, it is recommended that the first zone mho units be set for a maximum of 80 percent of the protected line length.

These instructions do not purport to cover all details or variations in equipment nor to provide for every possible contingency to be met in connection with installation, operation or maintenance. Should further information be desired or should particular problems arise which are not covered sufficiently for the purchaser's purposes, the matter should be referred to the General Electric Company.

To the extent required the products described herein meet applicable ANSI, IEEE and NEMA standards; but no such assurance is given with respect to local codes and ordinances because they vary greatly.

The ground mho units are provided with separate current circuits for zero sequence current compensation. A tapped auxiliary current transformer is used to provide the proper ratio of compensation. With zero sequence current compensation in use the ground mho units will have essentially the same reach on single-phase-to-ground faults as on three phase faults. Since the CEYG52A is a first zone relay, zero sequence current compensation should always be used. Typical external connections of the relay and compensating transformer are shown in Figure 3. The relay is not compensated for the zero sequence mutual impedance between the protected line and other parallel circuits. Such compensation is not recommended with mho directional ground distance relays.

The presence of zero sequence mutual impedance between the protected line and a parallel circuit will change the apparent impedance seen by the first zone mho units of the CEYG52A. The effect may be to cause the units to overreach or underreach their set point depending upon the relative direction of the zero sequence current flowing in the parallel line. The effects of zero sequence mutual are discussed in more detail in Appendix II.

On single-phase-to-ground or double-phase-to-ground faults immediately behind the relay location it is possible that one of the units associated with an unfaulted phase may operate incorrectly. Appendix III provides the means of determining the limitations on the ground mho unit reach setting if such incorrect operations are to be avoided. The system conditions which lead to a limitation on the mho unit reach setting, as described in Appendix III, are rather unusual. They occur when the zero sequence current contribution over the line to a fault directly behind the relay location is larger than the positive sequence current contribution.

If the maximum acceptable reach setting as determined in Appendix III proves to be an application limitation, a zero sequence directional overcurrent relay Type CFPG16A may be used to supervise the CEYG52A operation. This will permit tripping by the CEYG only when the fault is in the forward direction. The connections of the CFPG relay are shown on the external connection diagram in Figure 3.

The CEYG52A is an extended range relay with three basic minimum reach settings. The best overall performance will be realized if the highest basic minimum reach tap setting that will accommodate the desired reach setting is used.

Note that when the CEYG52 is applied as a first-zone relay on a three-terminal line application special consideration must be given to its setting. The zone-1 units are instantaneous tripping functions and must be set so as not to operate on any external fault. Therefore, the ground mho unit setting at any given terminal must not exceed 80 percent of the impedance to the nearest remote line terminal with the breaker at the other remote terminal open.

RATINGS

The CEYG52A relay is available for 69 volts, 5 amperes and 60 cycle ratings. The one second rating of the current circuits is 225 amperes. The basic minimum reach and adjustment ranges of the mho units are given in Table II.

TABLE II

BASIC MINIMUM REACH Ø - N OHMS	RANGE Ø - N OHMS	ANGLE OF MAXIMUM TORQUE
0.375 Ω	.375/3.75	60°/75°
0.75 Ω	.75/7.5	60°/75°
1.5 Ω	1.5/15.0	60°/75°
3.0 Ω	3/30.0	60°/75°

The angle of maximum torque is factory adjusted for 60° lag but the angle of maximum torque can be adjusted up to 75° lag.

The reach of the mho units at the 75° setting will increase to approximately 103 percent of its reach at the 60° setting.

Selection of the desired basic minimum reach settings for each unit is made by means of two sliding tap screws located at the back of the relay (See Figure 2). The position of these screws determine the reach settings of the two primary windings of the transactors. The ohmic reach of the mho units can be adjusted in 1 percent steps over a 10/1 range for any of the basic minimum reach settings listed in Table II by means of the autotransformer tap leads on the right side of the relay, front view. See Figure 8 for a diagram explanation of the transformer adjustments.

CONTACTS

The contacts of the CEYG52A will close and momentarily carry 30 amperes D.C. However, the circuit breaker trip circuit must be opened by an auxiliary switch contact or other suitable means, since the

relay contacts have no interrupting rating.

TARGET AND SEAL-IN

The 0.6/2 ampere target seal-in unit is used in the CEYG52A relay and has the ratings as shown in Table III.

TABLE III

TARGET SEAL-IN UNIT		
	0.6 Amp Tap	2.0 Amp Tap
Minimum operating	0.6 amps	2.0 amps
Carry Continuously	1.5 amps	3.5 amps
Carry 30 amps for	0.5 sec.	4 secs.
Carry 10 amps for	4 secs.	30 secs.
DC Resistance	0.6 ohms	0.13 ohms
60 Cycle Impedance	6 ohms	0.53 ohms

OPERATING PRINCIPLES

The mho units of the CEYG52A(-)D relay are of the four pole induction cylinder construction in which the torque is produced by the interaction between the polarizing flux and the flux that is proportional to the restraining or operating quantities.

The schematic connections of the unit are shown in Figure 4. The two side poles, energized by phase to neutral voltage produce the polarizing flux. The flux from the front and rear poles are energized by the difference between the secondary voltage of the transactor and a percentage of the same phase to neutral voltage.

This interacts with the polarizing flux to produce torque. The torque equation can be written as follows.

$$\text{Torque} = K E_a (I_a Z_{T1} - T E_a) \cos B \quad (1)$$

where K = Design constant
E_a = Phase to neutral voltage
I_a = Phase A current (zero sequence compensation current not included)
Z_{T1} = Transfer impedance of transactor T_{R1} (design constant)
T = Autotransformer tap setting
B = Angle between E_a &($I_a Z_{T1} I$)

That this equation (1) defines a mho characteristic can be shown graphically by means of Fig. 5. The vector IZ_{T1} at an angle θ determines the basic minimum reach of the unit for a particular tap setting of the transactor TR-1 primary. Assuming finite values of E and (IZ_{T1} - TE), the balance point, torque = 0, will occur where cos B = 0, that is where the angle is 90°. The locus of the terminus of vector TE (point A in Fig. 5) which will cause the angle to always be 90° is a circle passing through the origin and with the vector IZ_{T1} as a diameter.

Considering further the diagram in Fig. 5, we note that the angle is less than 90° for an internal fault (point C) and the net torque will be in the closing direction (cos θ is positive); and that the angle is greater than 90° for an external fault (point D) and the net torque will be in the opening direction (cos θ is negative).

The impedance characteristic of the mho unit is shown in Fig. 6 for the 0.75 ohm basic minimum reach setting at a maximum torque angle of 60 degrees. This characteristic is obtained with the terminal voltage of the relay supplied directly to the restraint circuit of the mho unit, that is with the mho taps on the autotransformer tap block set at 100 percent. This circular impedance characteristic can be enlarged, that is mho unit reach can be increased, by up to 10/1 by reducing the percentage of the terminal voltage supplied to the restraint circuit by means of the taps on the autotransformer tap blocks and the circle can be further enlarged, providing a total range adjustment of up to 40/1, by means of the basic minimum reach tap screws. The circle will always pass through the origin and have a diameter along the 60 degree impedance line equal to the ohmic reach of the unit as expressed by the following equation

$$\text{Ohmic Reach} = \frac{(100)Z_{min}}{\text{Tap Setting (\%)}}$$

where:

Z_{min} = Basic minimum phase-to-neutral reach of the unit (as set by taps).

The angle of maximum torque of the mho unit can be adjusted up to 75° (see SERVICING) with negligible effect on the reach of the unit.

2. DIRECTIONAL ACTION

The mho unit is carefully adjusted to have correct directional action under steady-state, low voltage and low current conditions. For faults in the non-tripping direction, the contacts will remain open at zero volts between 0 and 60 amperes. For faults in the tripping direction, the unit will close its contacts between the current limits in Table IV for the four basic minimum reach settings at the voltages shown:

TABLE IV

BASIC MIN. REACH TAP	VOLTS	CURRENT RANGE FOR CORRECT DIRECTIONAL ACTION
0.375	2.0V	12 - 60A
0.75 ohms	2.0V	6 - 60A
1.5	2.0V	3 - 60A
3.0	2.0V	1.5 - 60A

* The unit is set at the factory on the 1.5 ohm tap for correct directional action over the indicated current range. A variation of ±10 percent can be expected on the values listed.

For performance during transient low-voltage conditions, where the voltage was normal at 69 volts prior to the fault, refer to the paragraph below on memory action.

3. UNDERREACH

At reduced voltage the ohmic value at which the mho unit will operate may be somewhat lower than the calculated value. This "pullback" or reduction in reach is shown in Fig. 7 for the 0.375, 0.75 1.5, and 3 ohm basic minimum reach settings. The unit reach in percent of setting is plotted against the three-phase fault current for four ohmic reach tap settings. Note that the fault current scale changes with the basic minimum reach setting. The mho unit will operate for all points to the right of the curve. The steady-state curves of Fig. 7 were determined by tests performed with no voltage supplied to the relay before the fault was applied. The dynamic curves were obtained with full rated voltage of 69 volts supplied to the relay before the fault was applied.

See Fig. 7 "Steady-state and Dynamic Reach Curves For The Mho Unit of The CEYG52 Relay".

4. MEMORY ACTION

The dynamic curves of Fig. 7 illustrate the effect of memory action in the mho unit which maintains the polarizing flux for a few cycles following the inception of the fault. This memory action is particularly effective at low voltage levels where it enables the mho unit to operate for low fault currents. This can be most forcefully illustrated for a zero voltage fault by referring to Fig. 7. A zero voltage fault must be right at the relay bus and therefore, to protect for this fault, it is imperative that the relay reach zero percent of its setting. Fig. 7 shows that the mho unit, under static conditions, will not see a fault at zero percent of the relay setting regardless of the tap setting. However, under dynamic conditions when the memory action is effective, Fig. 7 shows that a mho unit with a 3 ohm basic minimum reach and 100% tap setting will operate if $I_{3\phi}$ is greater than 1.5 amperes.

5. TRANSIENT OVERREACH

The operation of the mho unit under transient conditions at the inception of a fault is important

because the relay is normally connected so that the mho contacts will trip a circuit breaker independently of any other contacts. The impedance characteristic of Fig. 6 and the steady-state curves of Fig. 7 represent steady-state conditions. If the fault current contains a D-C transient, the unit may close its contacts momentarily even though the impedance being measured is slightly greater than the calculated steady-state reach. This overreaching tendency will be a maximum when a fault occurs at the one instant in either half-cycle which produces the maximum D-C offset of the current wave. The maximum transient overreach of the mho unit will not exceed 6 percent of the steady-state reach for line angles up to 85 degrees.

6. OPERATING TIME

The operating time of the mho unit is determined by a number of factors such as the basic minimum reach setting of the unit, fault current magnitude, ratio of fault impedance to relay reach, and magnitude of relay voltageprior to the fault. The curves in Fig. 9 are for the condition of rated volts prior to the fault. Time curves are given for four ratios of fault impedance to relay reach setting. In all cases, the mho taps were in the 100 percent position and the angle of maximum torque was set at 60° lag.

See Figure 9 "Operating Time Curves For The Mho Unit In The CEYG52A Relay".

TAPPED AUTOTRANSFORMER

The ohmic reach of the mho units may be adjusted by means of taps on the two autotransformers. Each autotransformer has two windings. One winding is tapped in 10% steps from 15% to 95%. The other winding is tapped at 0%, 1%, 3% and 5%.

The desired tap setting is made by the proper location of the leads marked #1 and the jumper connecting the two windings of the autotransformer. Note that the 0-5% winding may be added or subtracted from the 15-95% winding. See figure 8.

The tap setting required to protect a zone Z ohms long, where Z is the positive phase sequence phase-to-neutral impedance expressed in secondary terms, is determined by the following equation:

$$\text{Tap Setting} = \frac{(100)\ (\text{Min. Ohms Setting})\ \cos\ (\phi-\theta)}{Z}$$

where:

θ = Angle of maximum torque
ϕ = Power factor angle of fault impedance

Example:

TAP SETTING DESIRED = 91

Set one end of jumper lead to 95%. Set the other end to 5%. Set #1 on 1%. (Note the 4% setting of the 0-5% winding subtracts from the 95% setting).

Example: 2

TAP SETTING DESIRED = 89

Set one end of jumper lead to 85%. Set the other end to 1%. Set #1 to 5%. (Note the 4% setting of the 0-5% winding adds to the 85% setting).

CALCULATION OF SETTINGS

In order to illustrate the calculations required, assume the application of a CEYG52 for zone-1 protection of Line no. 1 between breakers A and B in Figure 15. Assume that line No. 1 has the following characteristics:

Z_1' = 24 $\angle 80°$ primary ohms

Z_0' = 72 $\angle 75°$ primary ohms

Z_{0M} = 14.4 $\angle 75°$ primary ohms

CT Ratio = 600/5

PT Ratio = 1200/1

Primary ohms are converted to secondary ohms by the relation:

$$Z_{SEC} = Z_{PRI} \times \frac{\text{CT Ratio}}{\text{PT Ratio}}$$

Therefore:

Z_1' = 2.4 $\angle 80°$ = 0.42 + j 2.36 sec. ohms

Z_0' = 7.2 $\angle 75°$ = 1.86 + j 6.95 sec. ohms

Z_{0M} = 1.4 $\angle 75°$ = 0.36 + j 1.35 sec. ohms

All symbols are defined in Appendix I except as specifically indicated.

The settings to be made on the zone-one ground mho units are: basic minimum ohmic tap T_B, the voltage restraint tap setting T, and the protected line zero sequence current compensation factor K'. The K' setting in percent is determined by the following relation:

$$K' = \frac{X_0' - X_1'}{3X_1'} \times 100$$

The setting for K' is:

$$K' = \frac{6.95 - 2.36}{3(2.36)} \times 100 = 65 \text{ percent}$$

Since K' can only be set in 10 percent steps, set it for 60 percent. This setting will provide a slight undercompensation to shorten the function reach. This is in a conservative direction for a zone-one function.

Consider the relays located at Breaker A. The zone one mho units should be set for 80 percent of the line impedance Z_1', or (0.8) 2.4 $\angle 80$ = 1.92 $\angle 80°$. If a parallel line existed, the next step would be to apply Appendix II, equation II-b to determine that this zone-1 mho setting will not overreach breaker B due to the mutual effect while clearing a parallel line fault.

The mutual effect of Line 2 must also be considered. A fault current contribution over Line 2 from breaker D through breakers C, A and B to fault F3 will cause the zone-one ground mho units at A to overreach. This may be evaluated using Appendix II, equation II-a. Assume a fault study yielded the following values for fault F3:

I_a' = 13.7 amperes based on 600/5 CT ratio
I_0' = 4.1 amperes based on 600/5 CT ratio
I_0'' =-5.5 amperes based on the CT ratio of the protected line of 600/5. This current has a negative sign because I_0'' flows in the opposite direction in Line 2 from that in which I_0' flows in Line 1.
K' = 0.6 per unit as determined previously

Substituting these values into equation II-a and neglecting arc resistance, the apparent impedance is:

$$Z_{app} = Z_1' + \frac{I_0'' Z_{om}}{I_a' + 3K'I_0'} = 2.4 + \frac{(-5.5)\ 1.4}{13.7 + (1.8)\ 4.1} = 2.4 - 0.36$$

Zapp = 2.04 /80° Since this value is greater than the 80 percent setting of zone one, which is 1.92 /80° ohms, the zone-one function will not overreach to respond to fault F3 on the next bus. If additional margin against this overreaching is desirable, the zone-one setting should be reduced.

Assuming the setting of 1.92 /80° ohm is satisfactory, select the highest possible basic minimum tap T_B for optimum performance, in this case a 1.5 ohm basic minimum tap. Next, the choice of the angle of maximum reach is made, assume 60 degrees. The voltage restraint tap setting T is determined by the following relation:

$$T = \frac{100\ T_B\ COS\ (\theta - \phi)}{Z}$$

where: ϕ = Relay angle of max. reach, 60 degrees assumed
Z = Desired reach of zone 1, 1.92 ohms
θ = Angle of Z, 80 degrees

$$T = \frac{100\ (1.5)\ COS\ (80 - 60)}{1.92} = 74 \text{ percent}$$

LIMITATION ON MHO-UNIT REACH

Appendix III provides the necessary equations to determine the mho unit maximum permissible reach settings (minimum tap). This will insure the non-operation of the mho units on the unfaulted phases for ground faults in the reverse or non-trip direction. These should be evaluated for the relays at Breaker A on the basis of fault locations F2, Figure 15. Since the mho unit in the CEYG52A relay is phase-to-neutral polarized, the minimum permissible tap for single-phase-to-ground faults will be determined from equation III-a or III-b in Appendix III, and for double-phase-to-ground faults from equation III-c.

Assume that the following values were determined from a system study:

$C = 0.27$ $\quad Z_1 = 0.875\ /82°$

$C_o = 0.11$ $\quad Z_o' = 1.05\ /78°$

$Z_o/Z_1 = 1.2$

First evaluate the term $(3K' + 1)\ Co - C$

$(3 \times .6 + 1)\ 0.11 - .27 = .31 - .27 = 0.04$

For single-phase-to-ground faults equations III-a and III-b should be checked to determine T_{min}:

EQ. III-a

The constant K_p must be evaluated from the curves in Fig. 19 for the ratio $Z_o/Z_1 = 1.2$, and is found to be 7.0. Substituting in III-a:

$$T_{min} = \frac{1.5\ (7)\ (.04)}{.875} = .48 \text{ percent}$$

EQ. III-b

The constant K_Q is determined from Fig. 20 and is found to be 23.5. Substituting in III-b:

$$T_{min} = \frac{1.5\ (23.5)\ (.04)}{.875} = 1.6 \text{ percent}$$

EQ. III-c

$$T_{min} = \frac{100\ (1.5)\ (.04)\ COS\ (80° - 60°)}{3\ (1.05)} = 1.8 \text{ percent}$$

Since all the equations give values of T_{min} which are less than 10 percent, these equations impose no limitation in the tap setting of the mho units, and the restraint tap setting of 74 percent previously determined can be safely used.

It should also be noted that the mho units respond to load and hence will measure load impedance. For this reason the tap setting must not be made so low that the units will operate under load conditions.

BURDENS

CURRENT CIRCUITS

The maximum C.T. current burden at 5 amperes for a single phase to ground fault is shown below for the 3 ohm tap. The burden on the other taps will be lower.

AMPS	HZ	R	X	P.F.	WATTS	V.A.
5	60	.044	.019	.94	1.11	1.18

POTENTIAL CIRCUITS (100% Transformer Setting)

The maximum burden at 69 volts, 60 Hz imposed on each potential circuit is as follows:

CIRCUIT	R	X	P.F.	WATTS	V.A.
POLARIZING	420	187	.915	9.45	10.45
RESTRAINT	3340	JO	1	1.47 .	1.47

For transformer settings less than 100 percent, use the following formula for the burden calculations.

$$VA = (a + Jb)\left[\frac{\text{Tap Setting}}{100}\right] + (C + Jd)$$

CIRCUIT	(WATTS + J VARS)	(WATTS + J VARS
POLARIZING	(C + Jd)	9.45 + J 4.20
RESTRAINT	(a + Jb)	1.47 + Jo

CONSTRUCTION

The type CEYG52 relays are assembled in a deep large size, double-end (L2D) drawout case having studs at both ends in the rear for external connections. The electrical connections between the relay units and the case studs are made through stationary molded inner and outer blocks between which nests a removable connecting plug which completes the circuits. The outer blocks attached to the case have the studs for the external connections, and the inner blocks have the terminals for the internal connections.

Every circuit in the drawout case has an auxiliary brush, as shown in Fig. 10, to provide adequate overlap when the connecting plug is withdrawn or inserted. Some circuits are equipped with shorting bars (see internal connections in Fig. 10) and on these circuits, it is especially important that the auxiliary brush make contact as indicated in Fig. 10 with adequate pressure to prevent the opening of important interlocking circuits.

The relay case is suitable for either semiflush or surface mounting on all panels up to 2 inches thick and appropriate hardware is available. However, panel thickness must be indicated on the relay order to insure that proper hardware will be included.

See figure 21 for outline and panel drilling.

A separate testing plug can be inserted in place of the connecting plug to test the relay in place on the panel either from its own cource of current and voltage, or from other sources. Or the relay can be drawn out and replaced by another which has been tested in the laboratory.

Figs. 1 and 2 show the relay removed from its drawout case with all major components identified. Symbols used to identify circuit components are the same as those which appear on the internal connection diagram in Fig. 11.

The mho subassembly includes the four pole unit and the associated circuit components. Adjustable reactors X_{11}, X_{12}, X_{13} used in setting the angle of maximum torque and rheostats R_{11}, R_{12}, R_{13}, used in setting the basic minimum reach can be adjusted from the front of the relay.

The transactors (TR-Ø1-2, TR-Ø2-3, TR-Ø3-1) with their tap blocks are mounted on the back. The relay must be removed from its case to make the transactor (or min. ohm) settings.

See Fig. 10, "Cross Section Of Case And Cradle Block Showing Auxiliary Brush And Shorting Bar".

ACCEPTANCE TESTS

Immediately upon receipt of the relay, an INSPECTION AND ACCEPTANCE TEST should be made to insure that no damage has been sustained in shipment and that the relay calibrations have not been disturbed. If the examination or test indicates that readjustment is necessary, refer to the section on SERVICING.

VISUAL INSPECTION

Check the nameplate stamping to insure that the model number and rating of the relay agree with the requisition.

Remove the relay from its case and check that there are no broken or cracked molded parts or other signs of physical damage, and that all screws are tight.

MECHANICAL INSPECTION

1. It is recommended that the mechanical adjustments in Table VII be checked.
2. There should be no noticeable friction in the rotating structure of the units.
3. Make sure control springs are not deformed and spring convolutions do not touch each other.
4. With the relay well leveled in its upright position the contacts of all 3 units must be open. The moving contacts of the units should rest against the normally closed contacts.
5. The armature and contacts of the seal-in unit should move freely when operated by hand. There should be at least 1/32" wipe on the seal-in contacts.
6. Check the location of the contact brushes on the cradle and case blocks against the internal connection diagram for the relay. This can be checked against the internal diagram in Figure 11.

RECEIVING, HANDLING AND STORAGE

These relays, when not included as a part of a control panel, will be shipped in cartons designed to protect them against damage. Immediately upon receipt of a relay, examine it for any damage sustained in transit. If injury or damage resulting from rough handling is evident, file a damage claim at once with the transportation company and promptly notify the nearest General Electric Apparatus Sales Office.

Reasonable care should be exercised in unpacking the relay in order that none of the parts are injured or the adjustments disturbed.

If the relays are not to be installed immediately, they should be stored in their original cartons in a place that is free from moisture, dust and metallic chips. Foreign matter collected on the outside of the case may find its way inside when the cover is removed and cause trouble in the operation of the relay.

PERIODIC CHECKS AND ROUTINE MAINTENANCE

In view of the vital role of protective relays in the operation of a power system it is important that a periodic test program be followed. It is recognized that the interval between periodic checks will vary depending upon environment, type of relay and the user's experience with periodic testing. Until the user has accumulated enough experience to select the test interval best suited to his individual requirements it is suggested that the points listed under INSTALLATION PROCEDURE be checked at an interval of from one to two years.

CONTACT CLEANING

For cleaning relay contacts, a flexible burnishing tool should be used. This consists of a flexible strip of metal with an etched-roughened surface resembling in effect a superfine file. The polishing action is so delicate that no scratches are left, yet it will clean off any corrosion throughly and rapidly. Its flexibility insures the cleaning of the actual points of contact. Do not use knives,

files, abrasive paper or cloth of any kind to clean relay contacts.

SERVICING

MECHANICAL ADJUSTMENTS

TABLE VII

SHAFT END PLAY	CONTACT GAP	CONTACT WIPE
.010 - .015 inches	.120 - .130 inches	.003 - .006 inches

For the electrical tests on the units refer to figure 12 and to table IV for the relay connections.

TABLE IV

CONNECT LEADS	TOP UNIT STUDS		MID UNIT STUDS		BOT. UNIT STUDS	
A -	15		16		17	
B -	18		18		18	
	1 (test)	2	1 (test)	2	1 (test)	2
C -	3	9	5	9	7	9
D -	4	10	6	10	8	10

DIRECTIONAL TESTS

(Restraint taps @ 100% - all unit reach taps at 1.5 ohms)

Test the relay in its own case; make sure it is in a leveled position. Connect the relay per figure 12 for the unit under test. Set the voltage at 55 volts and the current at 5 amperes, then set the phase angle meter to read 60° lag or 300° lead depending on the test equipment used. Reduce the voltage to 2 volts and adjust the control spring with the notched adjusting sprocket above the control spring so the trip contact will close between 2.8 to 3.2 amperes. Then increase the current to 60 amperes, very rapidly so the unit doesn't overheat, and observe that the contact remains closed over the range of current from 3.2 to 60 amperes. A slight adjustment of the core will be necessary if this test fails. An explosion view of the unit, core and associated parts are shown in figure 13. The core can be rotated with a special wrench (catalog no. 0178A9455 Pt-1) which engages the "D" nut without the need to loosen the other parts of the core Assembly. The core locking mechanism consists of the "F" nut, 2 "C" wave tension washers and the core threaded stud. Therefore, the core can be rotated 360 degrees and still remain secured to the frame. Remove the voltage and short the potential studs at the relay case. Again, increase the current and the contact should remain open from 0 to 60 amperes. Adjust the core to an optimum position to make both parts of the directional test function properly.

REACH SETTING

(Restraint taps @ 50%. All reach taps @ 1.5 ohm). The restraint tap settings are illustrated in figure 8.

With the test connections as shown in figure 12, Table IV, for the unit under test, set the phase angle meter to read 60 degrees lag or 300 degrees lead using 55 volts and 5 amperes. Adjust R_{11} (top unit), R_{12} (Mid. Unit) R_{13} (Bot. Unit) to have the trip contact just close according to table IX.

TABLE IX

TAP SETTING	VOLTAGE	Ø / ___ SETTING	P.U. CURRENT
1.5 Ω	30V	60° lag or 300° lead	9.7 to 10.3
0.75 Ω	30V	60° lag or 300° lead	19.4 to 20.6
3.0 Ω	30V	60° lag or 300° lead	4.85 to 5.15
0.375 Ω	15V	60° lag or 300° lead	19.4 to 20.6

ANGLE OF MAXIMUM TORQUE

With the relay connected as in figure 12, Table IV, for the units under test. The reach taps at 1.5 ohms. Set the voltage and the Phase Angle meter as in Table X and adjust X11 for the top unit, X12 for the middle unit and X13 for the bottom unit to make the unit pick up at the current values in table X for both the 330° and the 270° Phase Angle settings. Cross adjust the reach and angle of maximum torque until both tests are in limits without further adjustments.

TABLE X

Unit Location	Ø-Angle Meter Reading		V_{A-B} Set At	Pickup Amps
	Angle Of Max. Torque	Test Angles		
Top	300°	330 & 270	45V	16.5 - 18.5
Middle	300°	330 & 270	45V	16.5 - 18.5
Bottom	300°	330 & 270	45V	16.5 - 18.5

Note that the two angles used in the previous check, i.e. 330° and 270°, are 30° away from the angle of maximum torque. An examination of the mho unit impedance characteristic in Fig. 5 shows that the ohmic reach of the unit should be the same at both 330° and 270° and should be 0.866 times the reach at the angle of maximum torque.

The units can be set for 75 degree angle of maximum torque by adjusting X_{11}, X_{12} or X_{13} but the reach will increase by approximately 103% of the reach at the 60 degree setting.

Recheck the directional test. If the core must be readjusted for the directional tests, recheck the reach and the angle of maximum torque.

Move the current leads to test B, figure 12, Table IV for the unit under test and check per Tables IX and X values.

When checking the other reach taps all the unit taps must be moved together into the same reach position, otherwise one unit will affect the other unit when the other taps are checked.

As previously mentioned the units can be adjusted to an angle of maximum torque of 75 degrees lag by adjusting X_{11}, X_{12}, and X_{13} but the reach at 75° will be 103% of the reach at the 60° setting.

CLUTCH TESTS

Put the reach taps in the 3 ohm position. Remove the restraint leads and short them to stud 18. Connect the relay per the calibration test figure 12, Table IV, except make the current coil connections as shown in Table XI below.

Set the voltage at 69 volts, the phase angle meter at 300° lead or 60° lag. Energize the relay and increase the current until the clutch slips. This should be within the limits in Table XI.

TABLE XI

Clutch	Voltage 69 Volts A B	Current Conn. Stud C	Jumper	Stud D	Clutch Slip
Top	15 & 18	3	4-9	10	35 to 55 Amps
Mid.	16 & 18	5	6-9	10	35 to 55 Amps
Bot.	17 & 18	7	8-9	10	35 to 55 Amps

For the .375/.75/1.5 ohm reach put the transformer Tap leads in 50%, put the reach tap at 1.5 ohms. The clutch slip limits will be the same as in Table XI.

TARGET SEAL-IN

The target seal-in unit has an operating coil tapped at 0.6 or 2.0 amperes.

The relay is shipped from the factory with the tap screw in the 2.0 ampere position. The operating point of the seal-in unit can be checked by connecting a D-C source, (+) to stud 11 of the relay and from stud 1 through an adjustable resistor and ammeter back to (-). Connect a jumper from stud 14 to stud 11 also so that the seal-in contact will protect the mho unit contacts. Then close the mho (M_1) unit contact by hand and increase the D-C current until the seal-in unit operates. It should pick up at tap value or slightly lower. Do not attempt to interrupt the D-C current by means of the mho contacts.

PORTABLE TEST EQUIPMENT

To eliminate the errors which may result from instrument inaccuracies and to permit testing the mho units from a single-phase A-C test source, the test circuit shown in schematic form in Fig. 16 is recommended. In this figure $R_S + jX_S$ is the source impedance, S_F is the fault switch, and $R_L + jX_L$ is the impedance of the line section for which the relay is being tested. The autotransformer T_A, which is across the fault switch and line impedance, is tapped in 10 percent and 1 percent steps so that the line impedance $R_L + jX_L$ may be made to appear to the relay very nearly as the actual line on which the relay is to be used. This is necessary since it is not feasible to provide the portable test reactor X_L and the test resistor with enough taps so that the combination may be made to match any line.

For convenience in field testing, the fault switch and tapped autotransformer of Fig. 16 have been arranged in a portable test box, Cat. No. 102L201, which is particularly adapted for testing directional and distance relays. The box is provided with terminals to which the relay current and potential circuits as well as the line and source impedances may be readily connected. For a complete description of the test box the user is referred to GEI-38977.

ELECTRICAL TESTS ON THE MHO UNITS

The manner in which reach settings are made for the mho units is briefly discussed in the "CALCULATION OF SETTINGS" section. Examples of calculations for typical settings are given in that section. It is the purpose of the electrical tests in this section to check the ohmic pickup of the mho units at the settings which have been made for a particular line section.

To check the calibration of the mho units, it is suggested that the portable test box, Cat. No. 6054975; and test resistor, Cat. No. 6158546 be arranged with Type XLA test plugs according to Fig. 17. These connections of the test box and other equipment are similar to the schematic connections shown in Fig. 16 except that the Type XLA test plug connections are now included.

Use of the source impedance $R_S + jX_S$, simulating the conditions which would be encountered in practice, is necessary only if the relay is to be tested for overreach or contact coordination, tests which are not normally considered necessary at the time of installation or during periodic testing. Some impedance will usually be necessary in the source connection to limit current in the fault circuit to a reasonable value, especially when a unit with short reach setting is to be checked, and it is suggested that a reactor of suitable value be used for this purpose since this will tend to limit harmonics in the fault current.

Since the reactance of the test reactor may be very accurately determined from its calibration curve, it is desirable to check mho unit pickup with the fault reactor alone, due account being taken of the angular difference between the line reactance, X_L, and mho unit angle of maximum reach. The line reactance, X_L, selected should be the test reactor tap nearest above twice the mho unit phase to neutral reach with account being taken of the difference in angle of the test reactor tap impedance and unit angle of

maximum reach. Twice the relay reach of the angle of the test reactor impedance is:

$$2Z\ \text{Relay} = 200\ [\frac{Z\ \text{Min.}}{\text{Tap Setting \%}}]\ \text{Cos}\ (\emptyset - \theta)$$

where:

$\emptyset$ = the angle of the test reactor impedance

θ = mho unit angle of maximum reach

Z Min = Basic minimum reach of mho units

To illustrate by an example let us consider the percent tap required on the test box autotransformer for a unit that has been factory adjusted to pick up at 3 ohms minimum and at a maximum torque angle of 60 degrees. In determining the reactor tap setting to use, it may be assumed that the angle ($\emptyset$) of the test reactor impedance is 80 degrees. From the above, twice the relay reach at the angle of the test reactor impedance is:

$$2Z\ \text{relay} = 200\ X\ \frac{3}{100}\ \cos\ (80 - 60) = 5.64\ \text{ohms}$$

Therefore, use the reactor 6 ohm tap. Twice the relay reach at the angle of test reactor impedance should be recalculated using the actual angle of the reactor tap impedance rather than the assumed 80 degrees. Table XII shows the angles for each of the reactor taps.

TABLE XII

TAP	ANGLE	COS $\emptyset$-60
24	88	0.883
12	87	0.891
6	86	0.899
3	85	0.906
2	83	0.921
1	81	0.934
0.5	78	0.951

From Table XII it is seen that the angle of the impedance of the 6 ohm tap is 86 degrees. Therefore:

$$2Z\ \text{relay} = 200\ X\ \frac{3}{100}\ \cos\ (86 - 60) = 5.4\ \text{ohms}$$

The calibration curve for the portable test reactor should again be referred to in order to determine the exact reactance of the 6 ohm tap at the current level being used. For the purpose of this illustration assume that the reactance is 6.1 ohms. Since the angle of the impedance of the 6 ohm tap is 86 degrees, the impedance of this tap may be calculated as follows:

$$Z_L = \frac{X_L}{\sin 86} = \frac{6.1}{.9976} = 6.115$$

From this calculation it is seen that the reactance and the impedance may be assumed the same for this particular tap. Actually the difference need only be taken into account on the reactor 3,2,1 and 0.5 ohm taps.

The test box autotransformer tap setting required to close the mho-unit contacts with the fault switch closed is:

$$\% = \frac{5.4}{6.1}\ (100) = 88.5\%\ (\text{use } 88\%\ \text{Tap})$$

Fig. 7 should be checked to determine that the test current used is high enough so that the characteristic is not off the calculated value because of low current.

If the ohmic pickup of the mho unit checks correctly according to the above, chances are that the angle of the characteristic is correct. The angle may, however, be very easily checked by using the calibrated test resistor in combination with various reactor taps. The calibrated test resistor taps are pre-set in such a manner that when used with 12 and 6 ohm taps of the specified test reactor, impedances at 60 degrees and 30 degrees respectively will be available for checking the mho unit reach at the 60 degree and 30 degree positions. The mho unit ohmic reach at the zero-degree position may be checked by using the calibrated test resistor alone as the line impedance. The calibrated test resistor is supplied with a data sheet which gives the exact impedance and angle for each of the combinations available. The test-box autotransformer percent tap for pickup at a particular angle if given by:

$$\% \text{ Tap} = \frac{200\ Z_{min} \cos(\phi - \theta)}{Z_L\ (\text{Tap Setting})\ \%} \quad (100)$$

where θ is the angle of maximum torque of the unit, ϕ is the angle of the test impedance (Z_L), Z is the 60 degree, 30 degree or zero degree impedance value taken from the calibrated resistor data sheet. As in the case of the previous tests, the load box which serves as source impedance should be adjusted to allow approximately 10 amperes to flow in the fault circuit when the fault switch is closed.

When checking the mho unit at angles of more than 30 degrees off the maximum reach position, the error becomes relatively large with phase angle error. This is apparent from Fig. 14 where it is seen, for example, at the zero-degree position that a two or three degree error in phase angle will cause a considerable apparent error in reach.

Determine the impedance and phase angle seen by the relays. Knowing the impedance and phase angle seen by the relay, the tap value at which the relay will just operate can be calculated. It is then only necessary to reduce the tap setting of the relay until the mho units operate and see how close the actual tap value found checks with the calculated value. The calculated value should take into account the shorter reach of the mho unit at low currents. This effect is shown in Fig. 7.

A shorter test will check for most of the possible oper circuits in the AC portion of the relay can be accomplished by disconnecting the current circuits. This can be done by removing the lower connection plug. All units should have strong torque to the right when full voltage is applied.

Replace the lower plug and open the restraint taps. All units should operate if power and reactive flow are away from the station bus and into the protected line section. If the direction of reactive power flow is into the station bus, the resultant phase angle may be such that the units will not operate.

ELECTRICAL TESTS

DRAWOUT RELAYS GENERAL

Since all drawout relays in service operate in their case, it is recommended that they be tested in their case or an equivalent steel case. In this way any magnetic effects of the enclosure will be accurately duplicated during testing. A relay may be tested without removing it from the panel by using a 12XLA13A test plug. This plug makes connections only with the relay and does not disturb any shorting bars in the case. Of course, the 12XLA12A test plug may also be used. Although this test plug allows greater testing flexibility, it also requires C.T. shorting jumpers and the exercise of greater care since connections are made to both the relay and the external circuitry.

POWER REQUIREMENTS GENERAL

All alternating current operated devices are affected by frequency. Since non-sinusoidal waveforms can be analyzed as a fundamental frequency plus harmonics of the fundamental frequency, it follows that alternating current devices (relays) will be affected by the applied waveform.

Therefore, in order to properly test alternating current relays it is essential to use a sine wave of current and/or voltage. The purity of the sine wave (i.e. its freedon from harmonics) cannot be expressed as a finite number for any particular relay, however, any relay using tuned circuits, R-L or RC networks, or saturating electromagnets (such as time overcurrent relays) would be essentially affected by non-sinusoidal wave forms.

Similarly, relays requiring dc control power should be tested using dc and not full wave rectified power. Unless the rectified supply is well filtered, many relays will not operate properly due to the dips in the rectified power. Zener diodes, for example, can turn off during these dips. As a general rule the dc source should not contain more than 5% ripple.

RENEWAL PARTS

It is recommended that sufficient quantities of renewal parts be carried in stock to enable the prompt replacement of any that are worn, broken, or damaged.

When ordering renewal parts, address the nearest Sales Office of the General Electric Company, specify quantity required, name of the part wanted, and the complete model number of the relay for which the part is required.

APPENDIX I

DEFINITION OF SYMBOLS

In the following appendices, and throughout other portions of this instruction book, the symbols used for voltages, currents, impedances, etc., are consistent. Note that all of the parameters listed below are secondary quantities based on the CT and PT ratios on the protected line terminal. Other symbols not defined here are to be defined as and where they are used.

Voltage

E_a = Phase A-to-neutral voltage. $E_{ab} = (E_a - E_b)$

E_b = Phase B-to-neutral voltage. $E_{bc} = (E_b - E_c)$

E_c = Phase C-to-neutral voltage. $E_{ca} = (E_c - E_a)$

E_{am} = Phase A-to-median (midpoint of E_{bc}) voltage

E_{bm} = Phase B-to-median (midpoint of E_{ca}) voltage

E_{cm} = Phase C-to-median (midpoint of E_{ab}) voltage

E_o = Zero sequence phase-to-neutral voltage.

E_1 = Positive sequence phase-to-neutral voltage.

E_2 = Negative sequence phase-to-neutral voltage.

Note that when one of these symbols is primed, such as E_a', it then represents the voltage at the location of the relay under consideration.

Current

I_a = Total phase A current in the fault.

I_b = Total phase B current in the fault.

I_c = Total phase C current in the fault.

I_o = Total zero sequence current in the fault.

I_1 = Total positive sequence current in the fault.

I_2 = Total negative sequence current in the fault.

Note that when one of the above symbols is primed, such as I_a', or I_2', it then represents only that portion of the current that flows in the relays under consideration.

I_o'' = Zero sequence current flowing in a line that is parallel to the protected line. Taken as positive when the current flow in the parallel line is in the same direction as the current flowing in the protected line. While this current flows in the parallel line, the secondary value is based on the CT ratio at the protected line terminal under consideration.

Distribution Ratios

C = Positive sequence current distribution ratio, assumed equal to the negative sequence current distribution ratio.

C_o = Zero sequence current distribution ratio.

$$C = \frac{I_1'}{I_1} = \frac{I_2'}{I_2} \qquad C_o = \frac{I_o'}{I_o}$$

Impedance, Reactance

Z_o = System zero sequence phase-to-neutral impedance as viewed from the fault.

Z_1 = System positive sequence phase-to-neutral impedance as viewed from the fault.

Z_2 = System negative sequence phase-to-neutral impedance as viewed from the fault. Assume equal to Z_1.

Z_o' = Zero sequence phase-to-neutral impedance of the protected line from the relay to the remote terminal.

Z_1' = Positive sequence phase-to-neutral impedance of the protected line from the relay to the remote terminal.

Z_2' = Negative sequence phase-to-neutral impedance of the protected line from the relay to the remote terminal, assume equal to Z_1'.

Z_{om} = Total zero sequence mutual impedance between the protected line and a parallel circuit over the entire length of the protected line.

X_1' = Positive sequence phase-to-neutral reactance of the protected line from the relay to the remote terminal.

X_o' = Zero sequence phase-to-neutral reactance of the protected line from the relay to the remote terminal.

X_{om} = Total zero sequence mutual reactance between the protected line and a parallel line over the entire length of the protected line.

Z_a = Phase A impedance for conditions described.

All of the above are secondary ohms, where:

$$\text{Secondary Ohms} = \text{Primary Ohms} \times \frac{\text{CT Ratio}}{\text{PT Ratio}}$$

and Z_{om} and X_{om} are calculated using the CT ratio for the protected line.

Miscellaneous

T = Relay voltage restaint tap setting in percent.

B, θ, ϕ = Angles in degrees as defined where used.

K_Q = Constant depending on the ratio of Z_o/Z_1.

T_B = Relay basic minimum ohmic tap at the set angle of maximum reach.

K' = Zero sequence current compensation tap setting for the protected line; in percent, unless otherwise noted.

K" = Zero sequence current compensation tap setting for the parallel line; in percent, unless otherwise noted.

S = Ratio of distances as defined where used.

M = Reach of Mho function from the origin (relay location) in the direction of the protected line section as forward reach.

M* = Reach of Mho function from the origin (relay location) away from the protected line section as reverse reach or reach in the blocking direction.

APPENDIX II

The zone-1 mho units of the CEYG52 relay are compensated by the zero sequence current of the protected line. Assuming that complete compensation is realized these units will therefore respond to the positive sequence impedance between the relay location and the fault plus an error impedance introduced by the mutual effect of a parallel line if one is present. The following derivation explains how this is accomplished:

The phase-to-neutral voltage at the relay during a single phase-to-ground fault on phase A is E_a' and is equal to the sum of the voltage drops from the relay to the fault. For a fault at the remote terminal of a line that is paralleled for its full length by a second line, this voltage, in terms of sequence components, is:

$$E_a' = I_1'Z_1'+I_2'Z_2'+I_o'Z_o'+I_o'' Z_{om}+I_aR_a$$

where I_aR_a is the drop due to fault resistance, and all other terms are as defined in Appendix I.

If we assume $Z_2'=Z_1'$, which is usually the case, and if we insert in the above equation the expression $(I_o'Z_1'-I_o'Z_1')$, we have:

$$E_a'=I_1'Z_1'+I_2'Z_1'+I_o'Z_1'-I_o'Z_1'+I_o'Z_o'+I_o'' Z_{om}+I_aR_a$$

$$E_a'=(I_1'+I_2'+I_o')Z_1'+I_o'(Z_o'-Z_1')+I_o''Z_{om}+I_aR_a$$

Since $(I_1'+I_2'+I_o')$ = the line current I_a',

$$E_a'=I_a'Z_1'+I_o'(Z_o'-Z_1')+I_o''Z_{om}+I_aR_a$$

$$E_a'=I_a'Z_1'+\frac{3I_o'(Z_o'-Z_1')}{3Z_1'}Z_1'+\frac{3I_o''Z_{om}Z_1'}{3Z_1'}+I_aR_a$$

$$E_a'=Z_1'\left[I_a'+\frac{3I_o'(Z_o'-Z_1')}{3Z_1'}\right]+I_o''Z_{om}+I_aR_a$$

This equation can also be written as

$$E_a'=Z_1'(I_a'+K'I_{res}')+I_o''Z_{om}+I_aR_a$$

where $K'=\frac{Z_o'-Z_1'}{3Z_1'}$ and $3I_o' = I_{res}'$, the residual current of the protected line. If the current supplied to the relay is $I_a'+K'I_{res}'$, the apparent impedance Z_a as determined by dividing the relay voltage E_a' by the relay current $I_a'+K'I_{res}'$ is as follows:

$$Z_a = Z_1' + \frac{I_o''Z_{om}}{I_a'+3K'I_o'} + \frac{I_aR_a}{I_a'+3K'I_o'} \qquad \text{II-a}$$

The second term of this equation is the error impedance introduced by the mutual effect of a parallel line if one is present. This error term may add or subtract. The I_o'' current is considered positive when the current flow is the parallel line is in the same direction as the current flow in the protected line. When these currents have opposite polarities the I_o'' current is considered negative.

The error term due to the mutual impedance must be evaluated in determining the setting of the zone-one ground mho units so that it will not overreach the protected line section and trip on an external fault. Consider two similar parallel lines on the same right-of-way as illustrated in Figure 18. Assume a single-phase-to-ground fault on line B at F1 and that Breaker 3 opens promptly on zone-1, but Breaker 4 remains closed for a time. The effect of the fault current flowing down Line A and back to Line B to the fault would produce a mutual effect which would tend to cause the ground mho unit at Breaker 1 to overreach. The apparent impedance as seen by the ground mho unit at Breaker 1 for fault F1 with breaker 3 open and no infeed from Station D is given by the following equation:

$$Z_a = Z_1'\left[1 + S_3\left(\frac{2 + K_o - 2K_mK_o}{2+K_o}\right)\right] \qquad \text{II-b}$$

where: $K_o = Z_o'/Z_1'$ $\qquad K_m = Z_{om}/Z_o'$

S3 = the ratio of (distance from Breaker 4 to the fault) to (the total length of Line A or Line B). All other symbols are defined in Appendix I.

The most severe condition of overreach will occur for the larger values of K_m and K_o. On actual systems, K_o will average about 3.5 but may be as high as 7.5. K_m will generally be about 0.5 but may be as high as 0.7. An evaluation of equation II-b with the extreme ratios of K_m and K_o will show that the apparent impedance will always be greater than the zone one ground mho setting which should never exceed 80 percent of the line length.

The ground mho units must never be compensated for the mutual effect resulting from a parallel line. If such compensation is used it could cause the incorrect operation of the ground mho unit upon the occurrence of a close-in fault on a line behind the relay location.

The last term of equation II-a is an error impedance introduced by the ground fault resistance. The angle of this error impedance will likely be zero degrees (parallel to the R axis) as contrasted to the highly lagging angles of the positive sequence impedance Z_1' and the mutual impedance Z_{om}. If the resistance is a significant factor compared to the positive sequence impedance of the line, its effect on the ground mho unit settings must be evaluated. Too large a fault resistance on an internal fault could cause the total impedance to the fault to plot outside of the characteristic of the ground mho unit. Thus proper tripping of the mho unit would not be obtained.

APPENDIX III

Maximum Permissible Reach Settings

Under some extreme system conditions it is possible during single-phase or double-phase-to-ground faults in the non-tripping direction for a ground mho unit associated with an unfaulted phase to operate. Since this can result in a false trip, it is necessary to check the reach setting of the ground mho units to be sure that they will not operate on such reverse faults. In the following sections equations are given for determining the maximum permissible reach setting (i.e. minimum permissible restraint tap setting) for both types of ground faults. If it is found that the maximum permissible reach setting conflicts with the setting required to cover 80 percnet of the protected line, use of the CFPG16 zero sequence directional overcurrent relay should be considered, as described in the APPLICATION section.

In the following discussion all voltages, currents, and impedances are in terms of secondary quantities based on CT and PT ratios. Equations are based on the use of zero sequence current compensation.

(1) Single-phase-to-ground faults-

For a phase-to-neutral polarized ground unit, such as used in the CEYG52, the following equations apply:

$$T_{min} = \frac{T_B K_p\,[(3K'+1)C_o - C]}{Z_1} \qquad \text{III-a}$$

$$T_{min} = \frac{T_B K_q[(3K'+1)C_o - C]}{Z_1} \qquad \text{III-b}$$

Use the curves of Figures 19 and 20 in the appendix to determine the values K_p and K_q.

(2) Double-phase-to-ground faults-

$$T_{min} = \frac{100\ T_B[(3K'+1)C_o - C]\ \cos\ (\theta - \emptyset)}{3Z_o} \qquad \text{III-c}$$

After evaluation of equations III-a, -b, and -c the highest of the tap values determined should be selected and then some margin should be added. A 10 percent margin (not 10 percentage points) should be adequate. The tap setting used for the mho units should be no lower than this value.

If a negative value for T_{min} is obtained it signifies that the equation offers no limitation to the setting. It should be noted, however, that under no circumstances should the mho unit tap setting be less than 10 percent. When evaluating the equations, the first step should be the evaluation of the term $(3K'+1)Co-C$. If this is negative for all system operating conditions for the fault at F_2, no further calculations need be made.

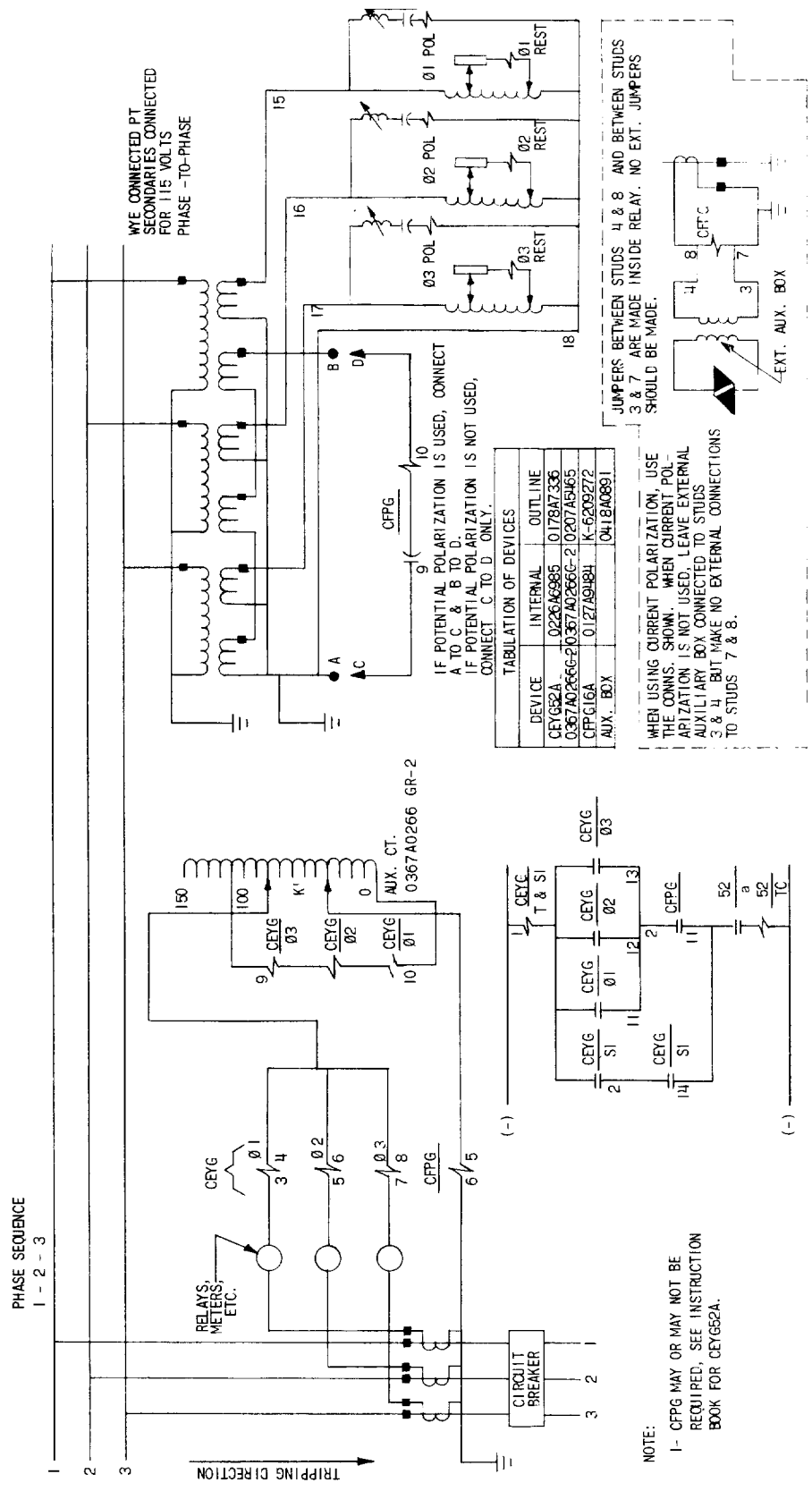

FIG. 3 (0165B2553-0) Typical External Connections For CEYG52A

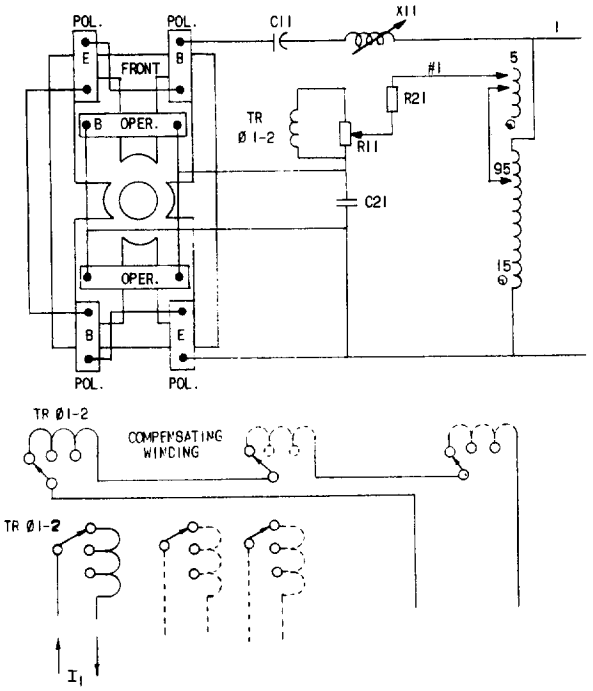

FIG. 4 (0246A2161-2) Schematic Connections Of The CEYG52A(-)A Mho Unit

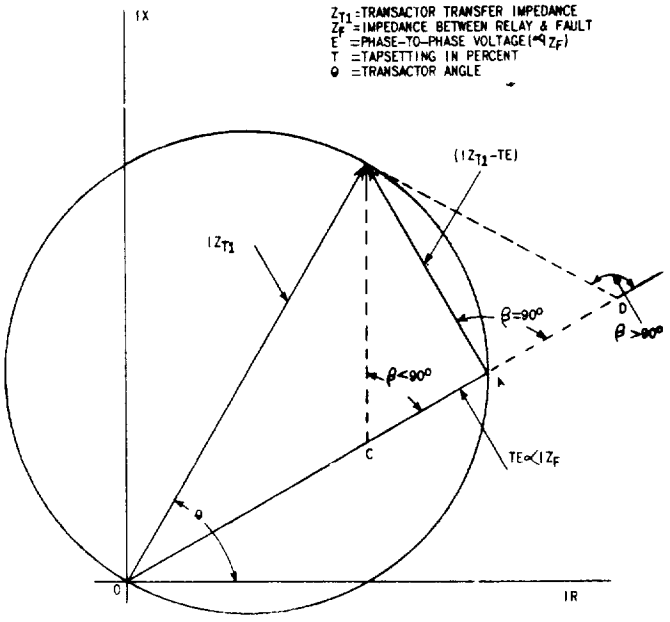

FIG. 5 (0195A4987-0) CEYG52A(-)D Mho Unit Characteristic

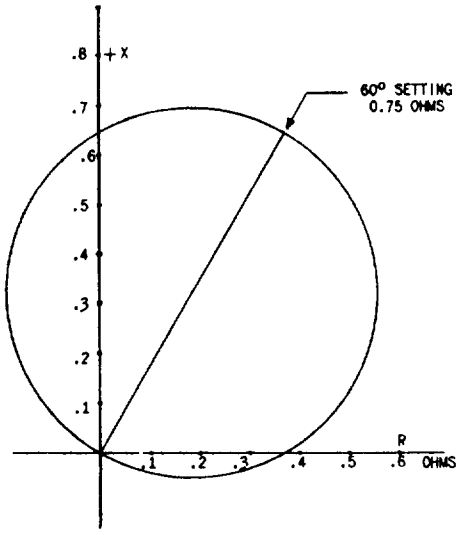

FIG. 6 (0195A4988-0) CEYG52A(-)D Mho Unit Impedance Characteristic

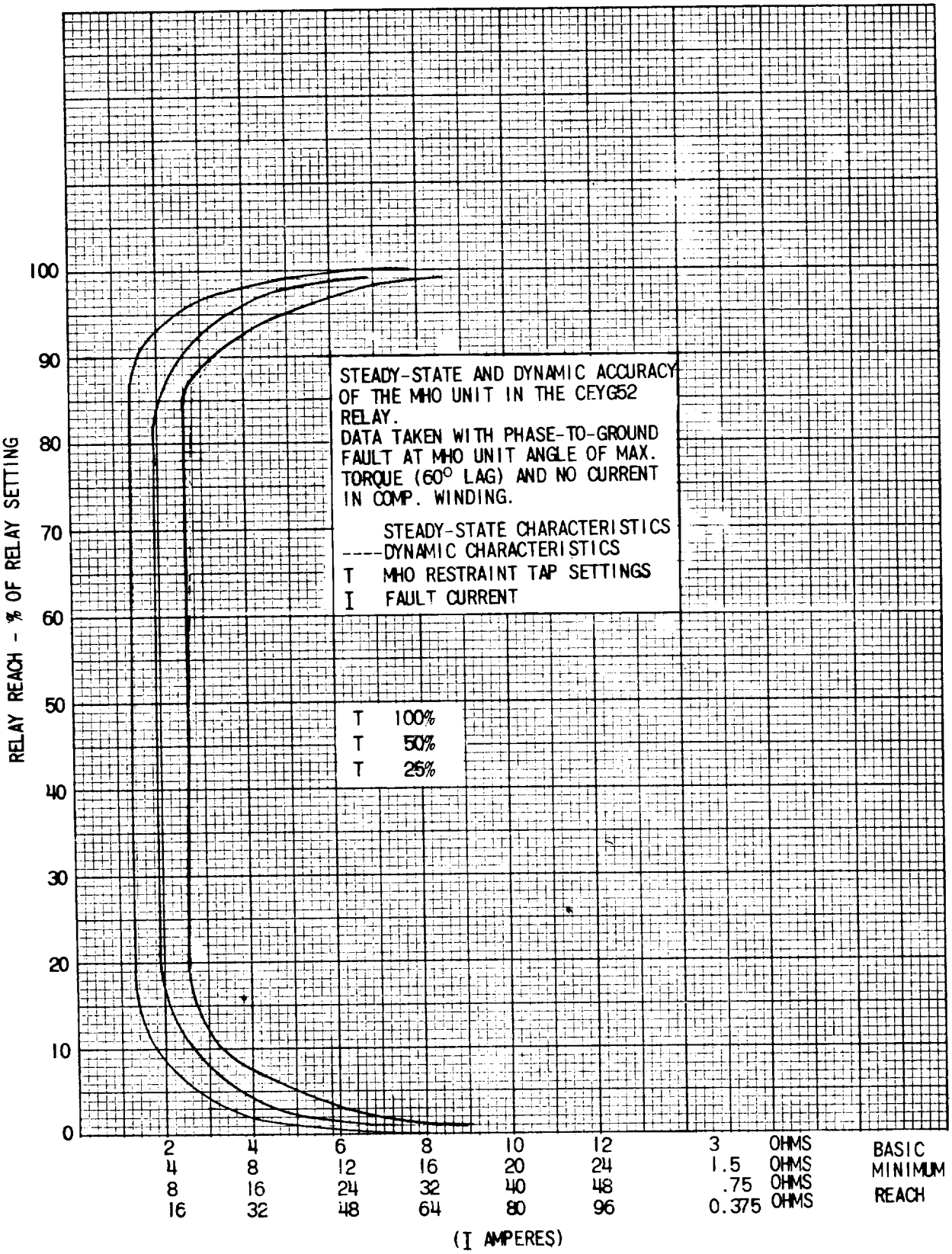

FIG. 7 (0227A2625-0) Steady Static And Dynamic Reach Curves

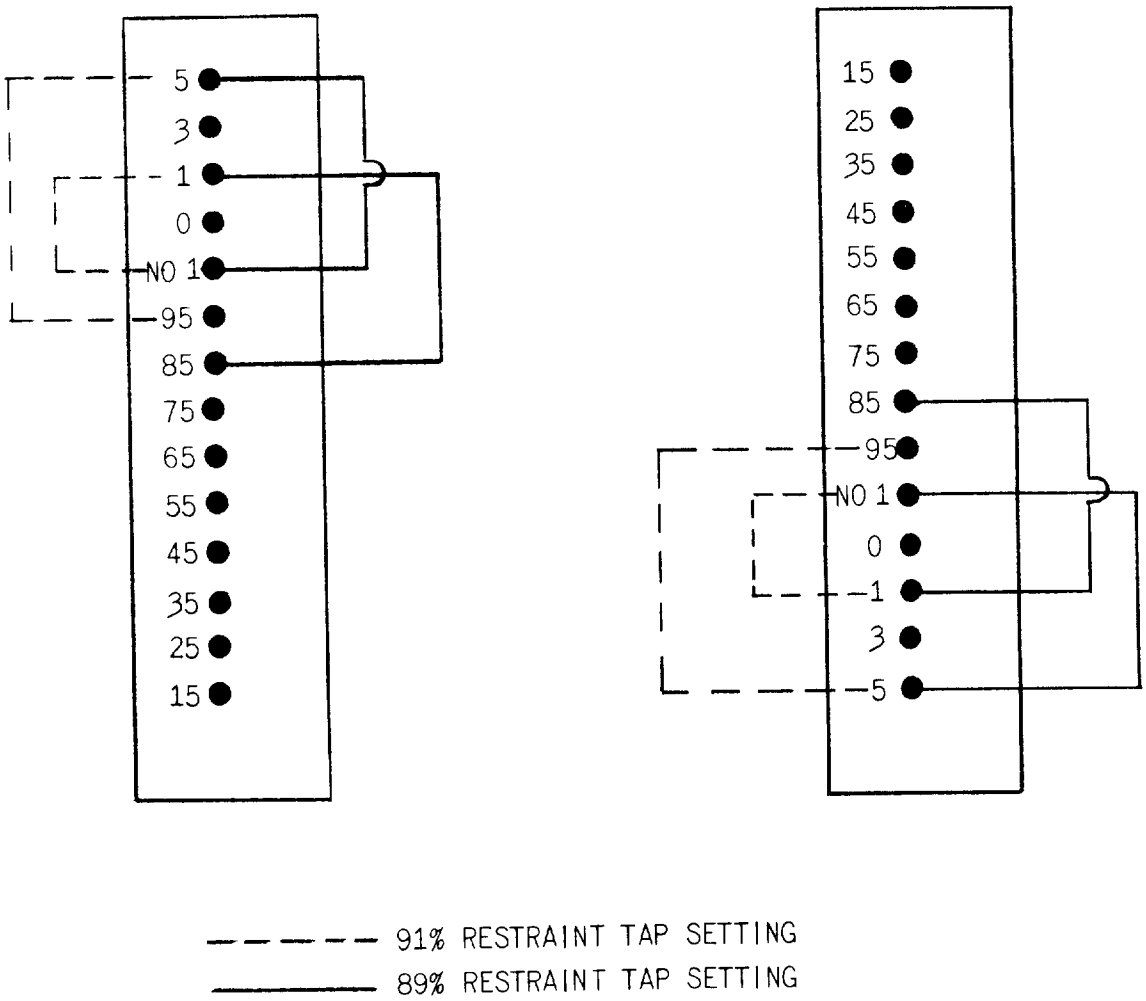

FIG. 8 (0208A3757-0) Tap Block Arrangement And Settings - Transformer Setting Diagram

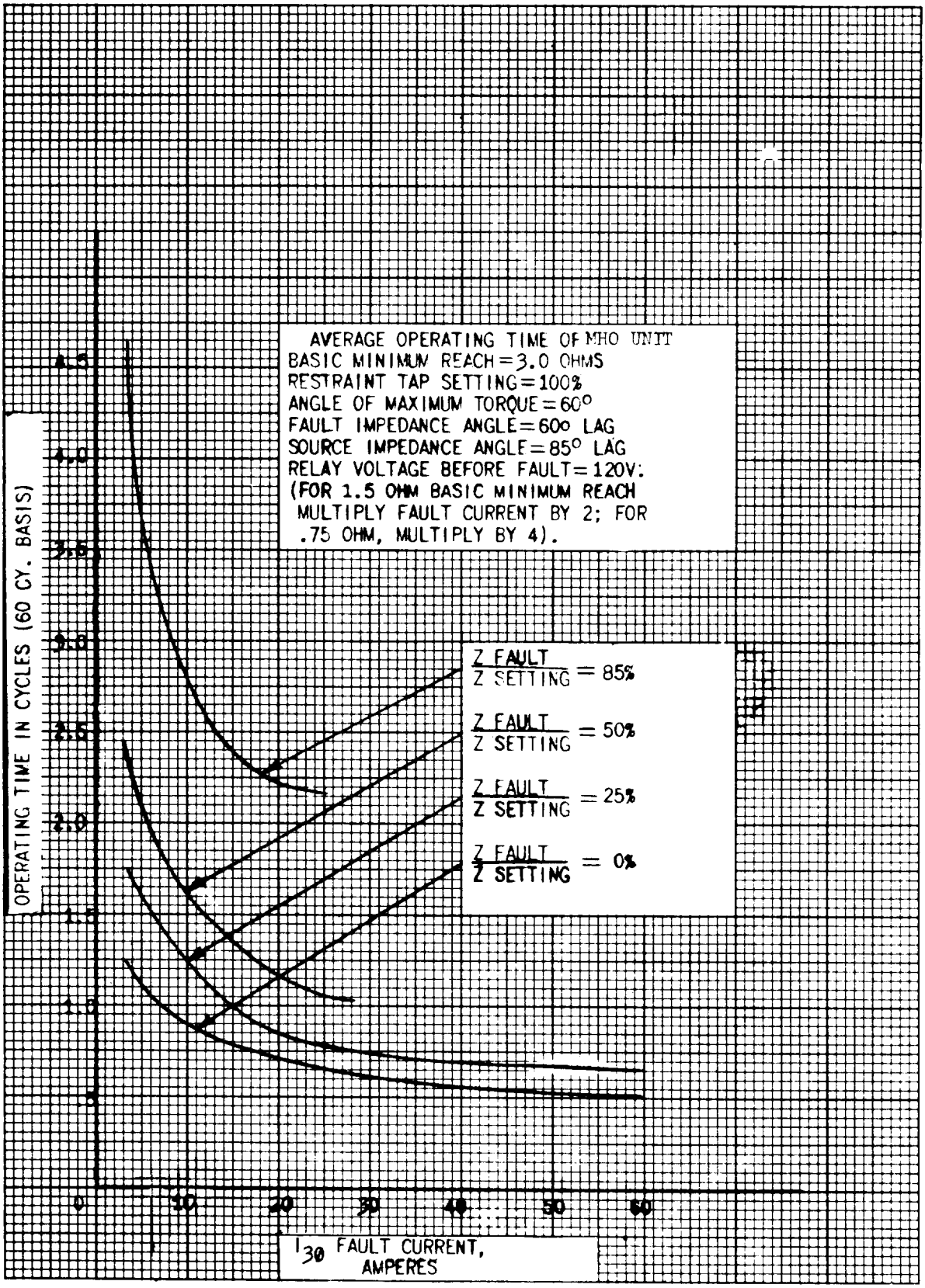

FIG. 9 (0195A4990-0) MHO Units Operating Time Curves

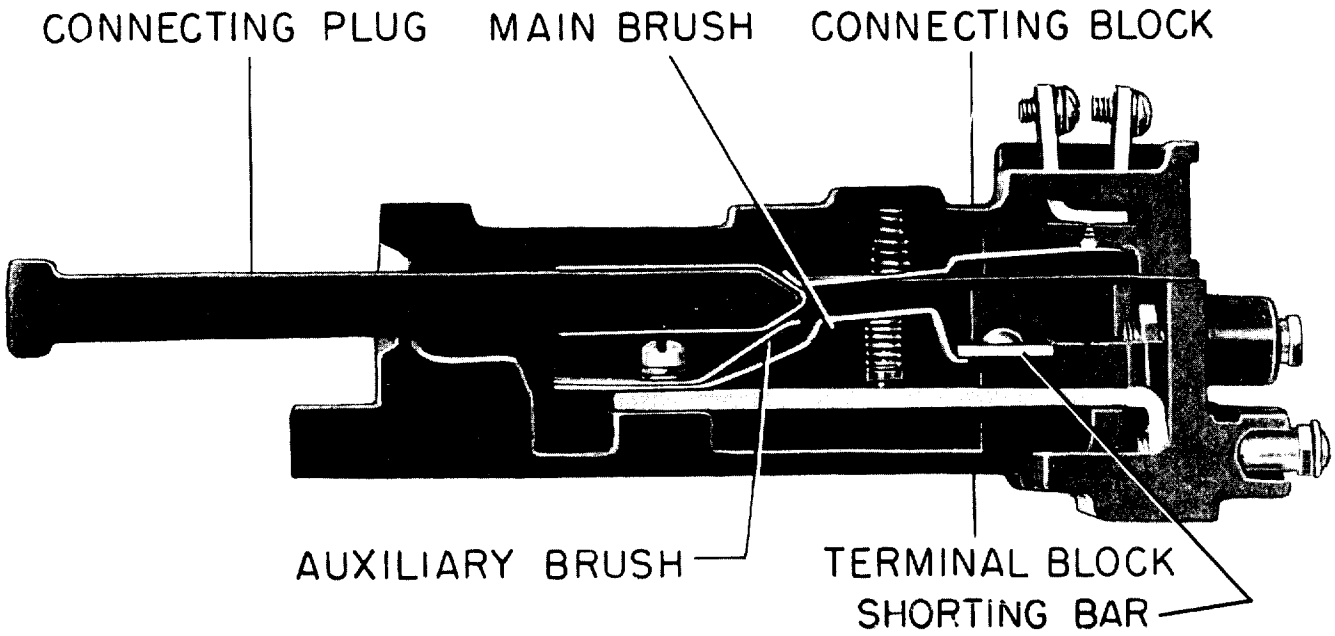

NOTE: AFTER ENGAGING AUXILIARY BRUSH, CONNECTING PLUG TRAVELS 1/4 INCH BEFORE ENGAGING THE MAIN BRUSH ON THE TERMINAL BLOCK

FIG. 10 (8025039) Cradle Block And Terminal Block Cross Section

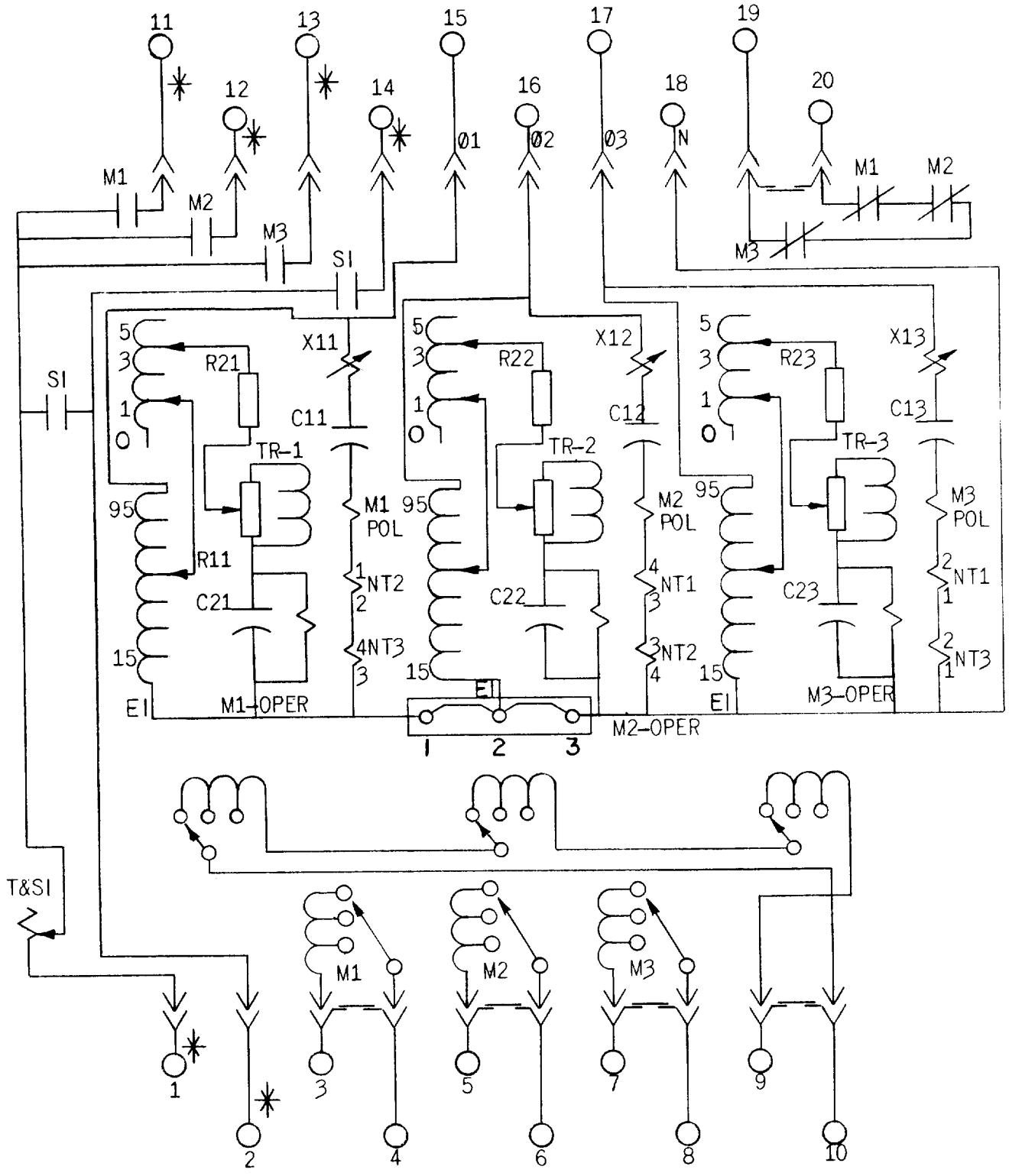

FIG. 11 (0226A6985-3) Internal Connections Diagram

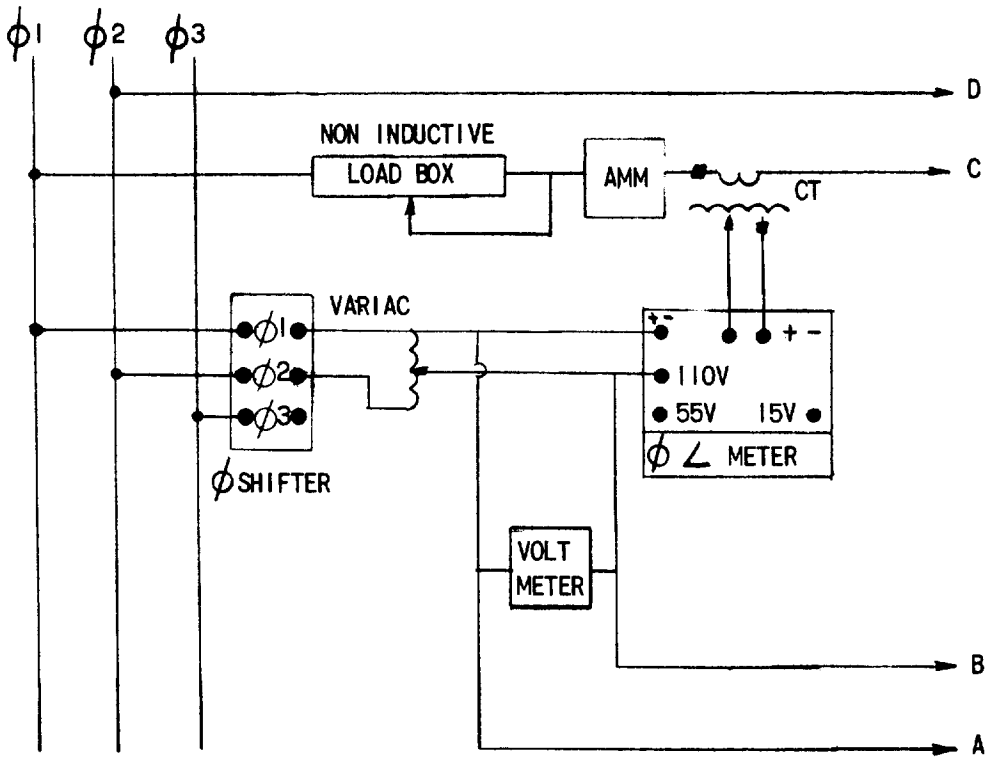

FIG. 12 (0227A8407-0) Test Connections Diagram

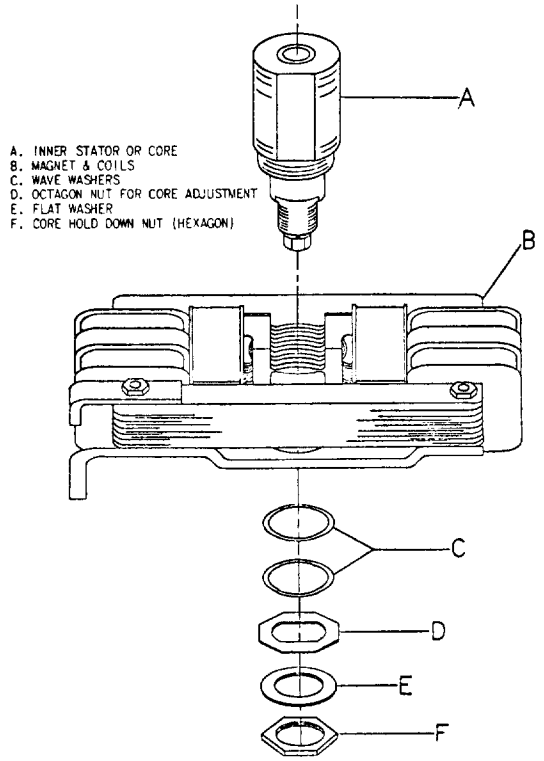

FIG. 13 (0208A3583-0) Assembly Of Core And Associated Parts

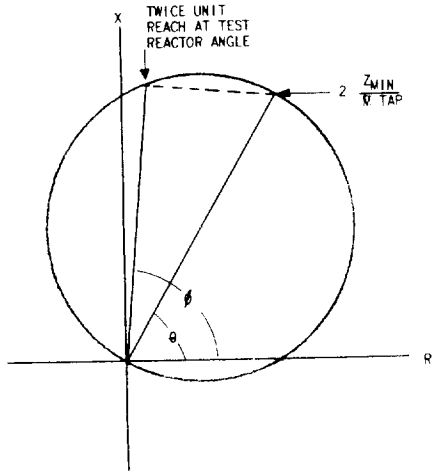

FIG. 14 (0195A4992-0) Reach Of MHO Unit At The Angle Of The Test Reactor

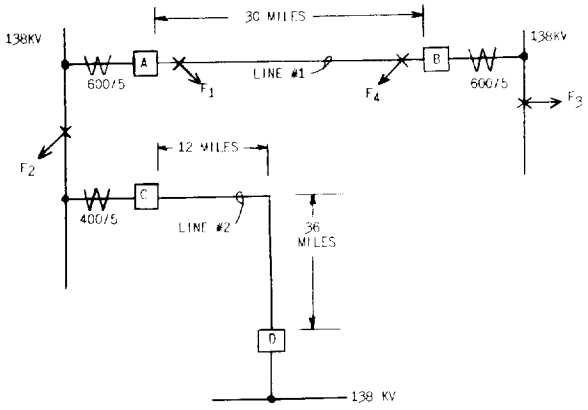

FIG. 15 (0165A7622-0) Typical Transmission System

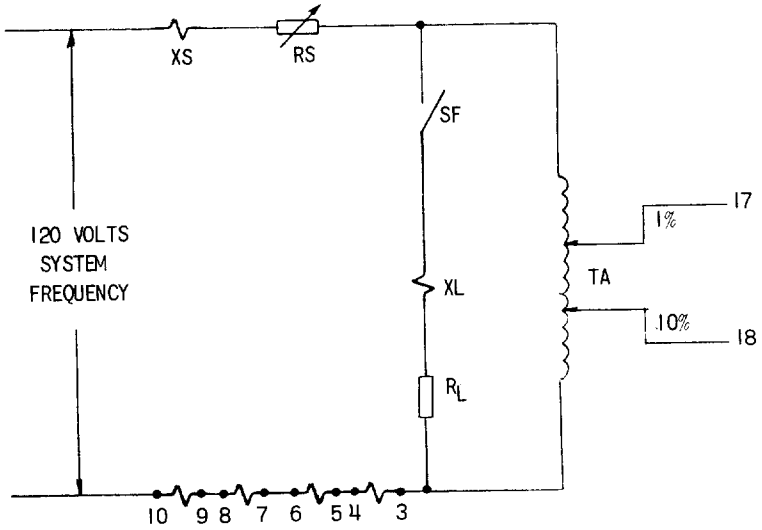

FIG. 16 (0227A8413-0) R And X Test Schematics

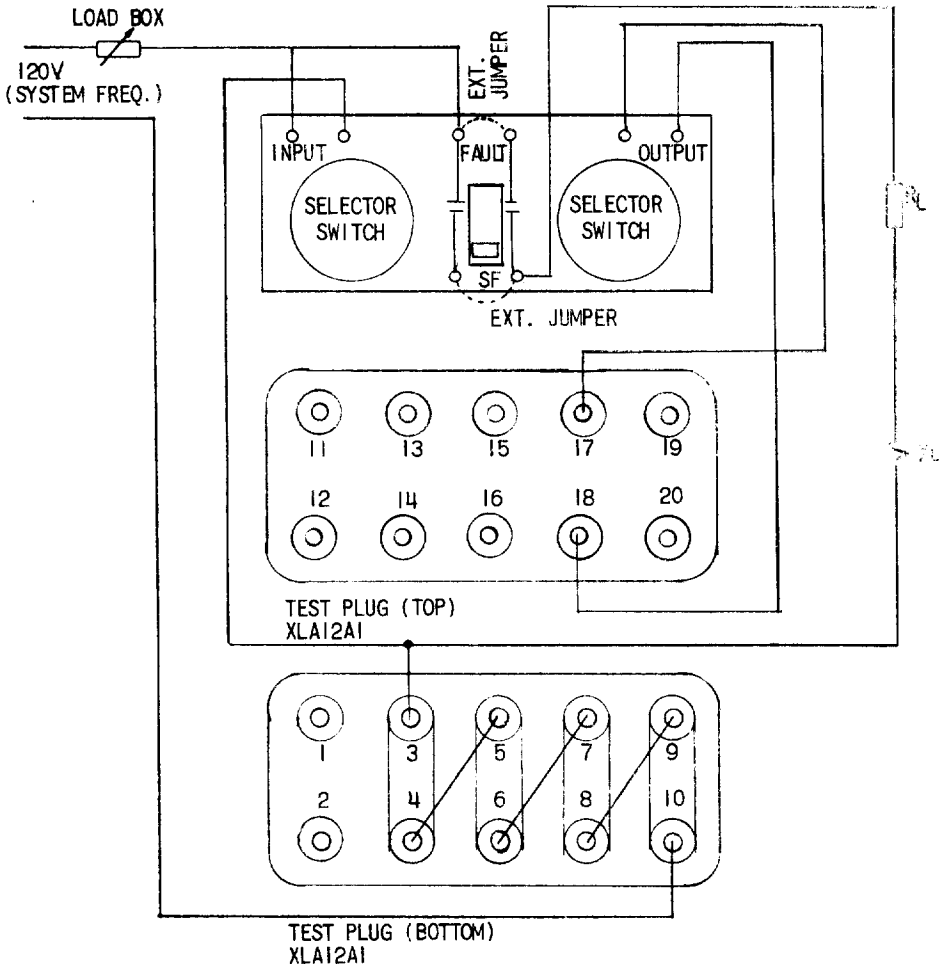

FIG. 17 (0227A8410-0) Test Connections Using R And X Equipment And XLA12A1 Test Plugs

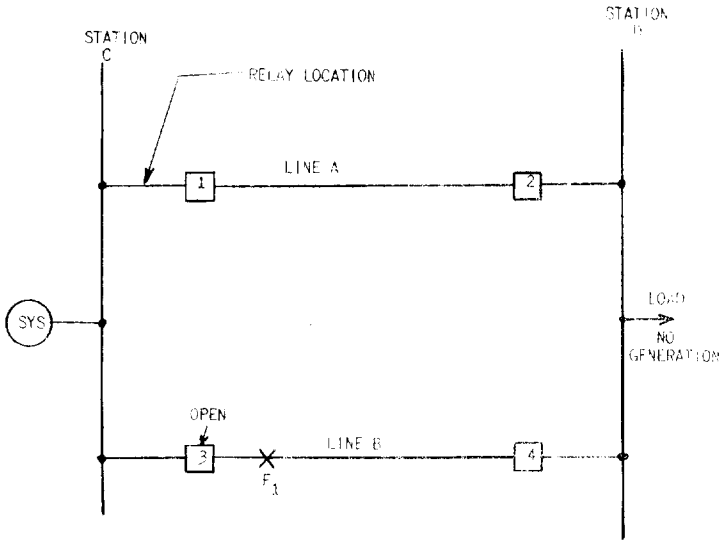

FIG. 18 (0165A7621-0) Parallel Transmission Lines With Ground Fault

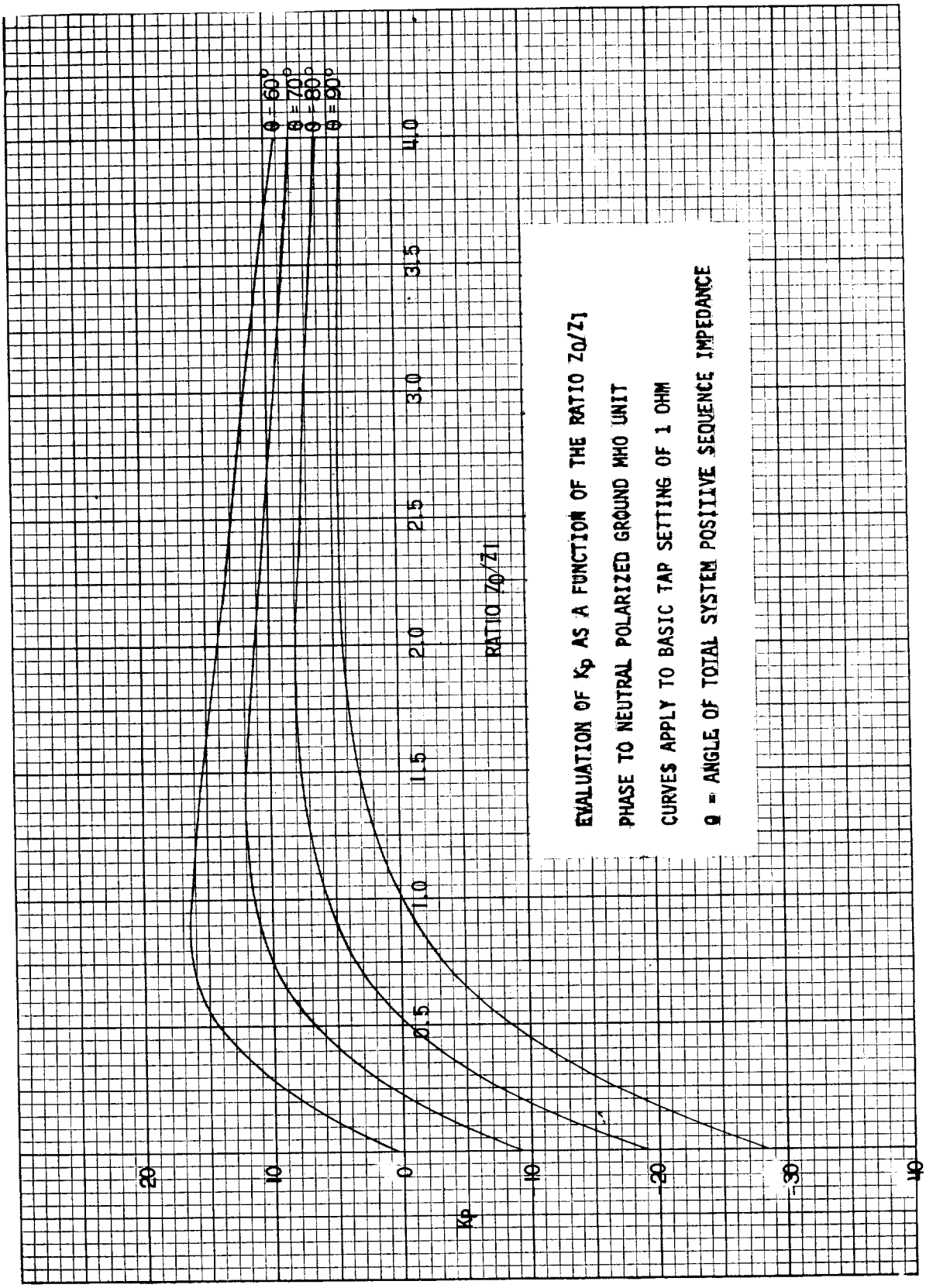

FIG. 19 (0227A2413-0) Evaluation Of K_p As A Function Of Z_0/Z_1

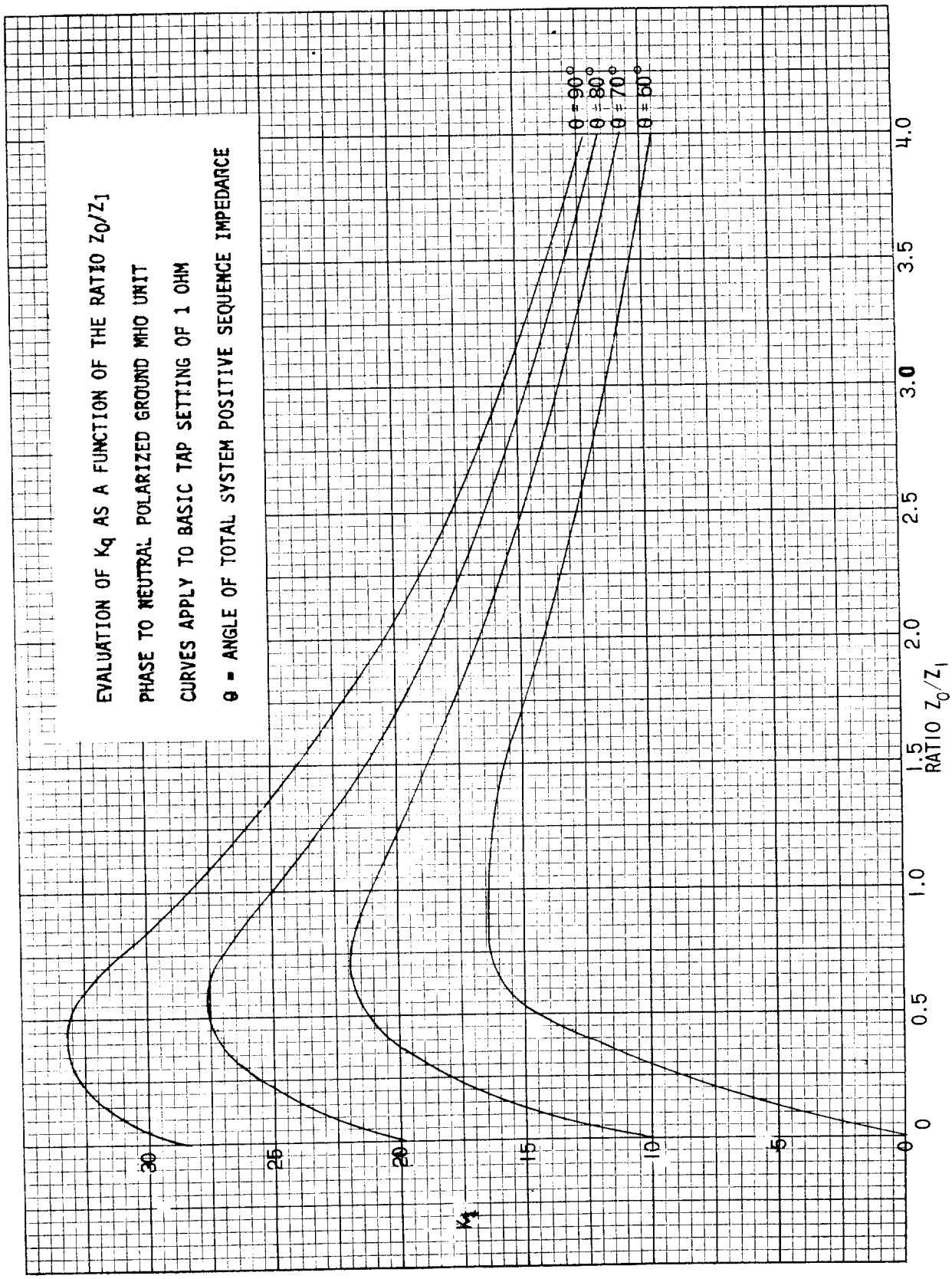

FIG. 20 (0227A2412-0) Evaluation Of K_Q As A Function Of Z_0/Z_1

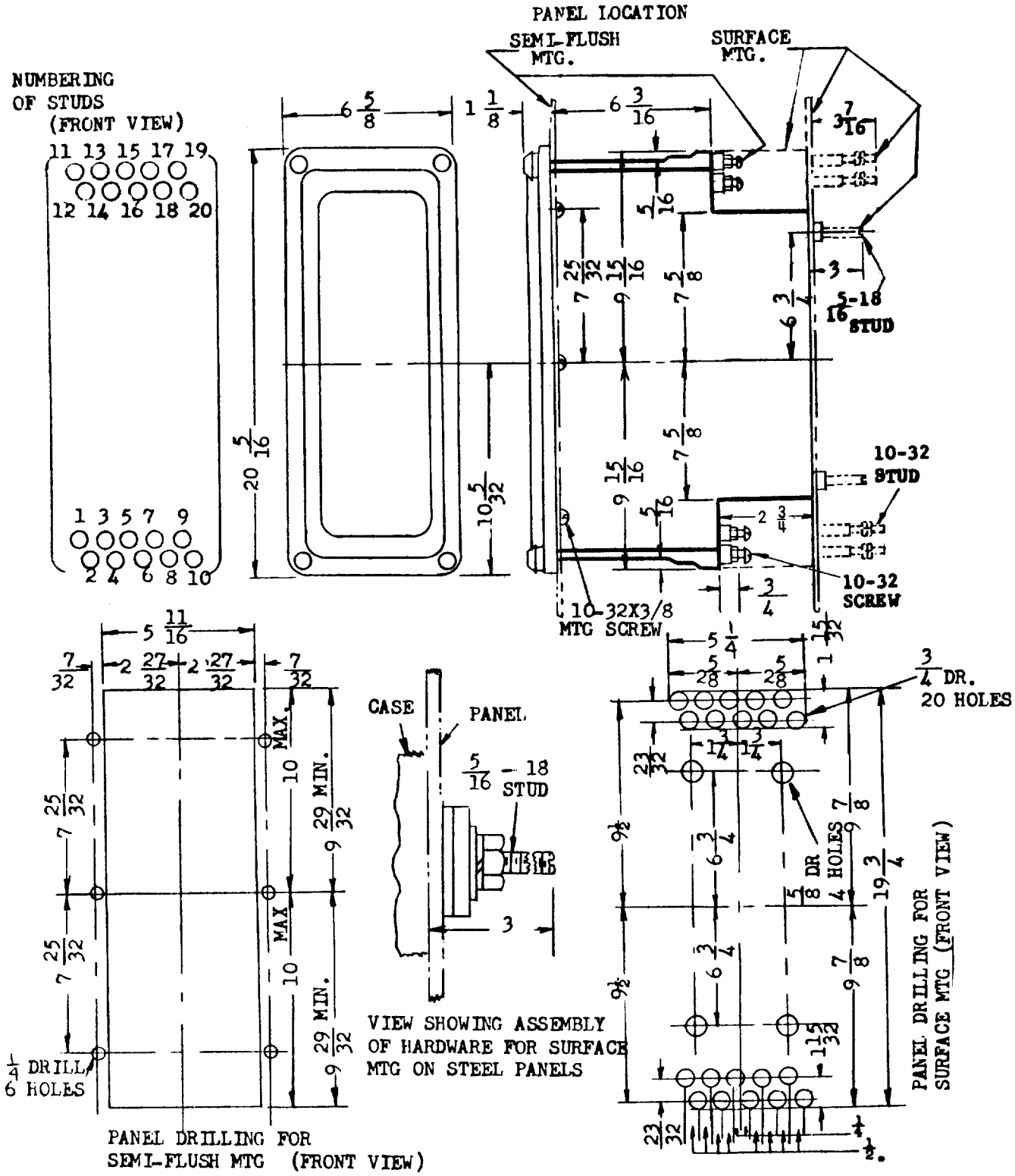

FIG. 21 (0178A7336-2) Outline And Panel Drilling For The CEYG52A Relay